CATALOGUE & TECHNICAL GUIDE APRIL 2016

MILLING

SECO

Contents

General information milling cutters — Code keys, shanks, cutter geometries and insert clamping system 6-8

General information inserts — Code keys, insert geometries and grades 9-17

Square shoulder and slot milling cutters 18-81

Helical milling cutters 82-130

Face milling cutters 131-203

Disc milling cutters 204-295

Plunge milling cutters 296-314

Copy milling cutters 315-401

High feed milling cutters 402-436

Minimaster® Plus 437-474

Minimaster 475-575

Misc. milling
- Chamfer milling cutters 576-578
- Spot facing cutters 579-583
- Cutters for CBN inserts 584-587
- Combimaster ® 588-598

Inserts
- Inserts 599-651
- Inserts in grade PCBN 652-658
- Inserts in grade PCD 659-663
- Other inserts 664-666

Machining data
- PCBN 667-674
- PCD 675-681
- Helical interpolation ramping 682-683
- Plunge milling 684
- Cutting data calculation 685-688
- Troubleshooting 689
- Torque information and dimension of mounting 690
- Intruduction SMG version 2 691

SMG*
- Workpiece Materials – SMG* 692-703

Declaration of conformity 704-706

* SMG = Seco Material Group

2
215.59-Helical 118, 120-122
217.21 417-418
217.21-LO06 413-414
217.21-LP05 405-406
217.21-LP06 409-410
217.29-025 321-322
217.29-03 325-326
217.29-035 329
217.29-04 332-333
217.29-05 336-337
217.29-08 348
217.29-10 351-352
217.29I-06 340-341
217.43-05 162
217.48-05 171
217.48-09 178
217.49 576
217.53-09 135-136
217.53-12 142
217.69-06 21-23
217.69-06-Helical 85-87
217.69-10 26-29
217.69-10-Helical 90-93
217.69-12 32-35
217.69-12-Helical 96-100
217.69-18 39-42
217.69-18-Helical 103-105
217.79-06 299
217.79-10 302-303
217.79-12 310
217.79-XO12 306-307
217.94 50-53
217.94-08 . . . . . 52-53, 58-59
217.94-08-Helical 108-111
217.94-12 . . . . . 56-57, 59
217.94-12-Helical 114-115
217.96-04 62-65
217.96-08 68-70
217.97-12 396-397
217.97-22 398-399
217.99-09 75
218.19 378-379
218.19-..HFA 380
218.20 356-358
220.21 . . . . . 419, 428, 431, 434
220.21-LO06 414
220.21-LP06 410
220.29-03 326
220.29-04 333
220.29-05 337
220.29-08 348
220.29-10 352-353
220.29I-06 342-343
220.30-12C 194
220.30-12CT 195
220.30-12ST 192-193
220.43-03 177
220.43-04 178
220.43-05 162-165
220.43-05C 164
220.43-05CG 164
220.43-05CT 165
220.43-06CT 165
220.43-07 . . . . . 155-158, 168
220.43-07C 157
220.43-07CG 157
220.43-07CT 158
220.43-07W 155
220.43-09 178
220.43-09S 177
220.44-15 187-188
220.44-15ST 189-190
220.48 174
220.48-05 172-173
220.48-09 177-179
220.49 576
220.53-09 136-137
220.53-09C 138-139
220.53-12 142-144
220.53-12C 145-146
220.53-15 149-150
220.53-15C 151-152
220.59-12-Helical 119, 123
220.60-19CM 199
220.66 183
220.66CM 184
220.68-T11C 587
220.68-T16C 586
220.69-06 23
220.69-10 28-29
220.69-10-Helical 91, 93
220.69-12 34-36
220.69-12-Helical 97, 99-100
220.69-15.5-Helical 126
220.69-15.X-Helical 126
220.69-18 41-43
220.69-18-Helical 104-105
220.70 584
220.74 585
220.79 312
220.79-12 311
220.79-XO12 307
220.88-15 197
220.90 46-48
220.94 52-53
220.94-08-Helical 109, 111
220.94-12 58-59
220.94-12-Helical 114-115
220.96-04 64-65
220.96-08 69-72
220.97-12 397
220.97-22 399
220.99-09 76
220.99-12 79
230.19 201
235.15-Helical 129
3
335.10 . . . . . 212, 215-216
335.15 212
335.18 . . . . . 232-236, 241-244, 247-250, 253-254
335.19 221-225
335.25 . . . . . 237-239, 245-246, 251-252

335.29 240
395.19 287
4
417.19 579
B
BD*5820 595
BD*5821 595
BD*5822 595
BM*5820 597
BS*5820 593-594
BW*5821 596
C
C.-391.5820. 598
E
E3414*5820. 591
E3414*5821. 591
E3416*5820. 592
E3416*5821. 592
E3476*5820. 589
E3476*5821. 589
E3478*5820. 590
E9302*5820. 588
E9304*5820. 588
E9304*5821. 588
E9306*5820. 588
E9306*5821. 588
M
MM06. 481
MM08. 498
MM10. 517
MM12. 536
MM16. 556
MP10 442
MP12 453
MP16 464

1
150.10 644
2
218.19 . . . . . 645, 658
218.20 646
3
335.18 647
335.19 648
A
ABEX 600
ACET 601
APHT 659
C
CCMX0602 602
CCMX0603 602
CCMX0803 602
CCMX08T3 602
CCMX09T3 602
CCMX1204 602
H
HNEF 664
HPMR 603
L
LNHQ14 606
LNHQ17 606
LNKT05 604
LNKT06 605
LNKT08 605
LOEX 607
LOHT 608
LOHW 608
LPHT 609
O
OFEN 611, 652, 660
OFER 611
OFET 612
OFEW 612
OFEX 610, 660
OFMR 611
OFMT05 610
OFMT07 612
ONEW 652
ONMU05 613
ONMU09 613
R
R235.15 649
R335.15-13 650
R335.15-18 651
RDHT06 614
RDHT08 614
RDHT10 614
RDHW05 614
RDHW07 614
RDHW08 653
RDHW10 653
RNGN 653-654
RPHT1204 615
RPHT1605 616
RPHT2006 616
S
SBAN 664
SCET 617
SEAN1203 618-619
SEAN1303 618
SEAN1504 619
SEAN1604 618
SEEN 655
SEEX09 . . . . . 620, 655, 661
SEEX1203 . . . . . 623, 655
SEEX1204 . . . . . 621, 655
SEEX1505 622
SEHN 661
SEKN1203 623
SEKN1204 623
SEKN1504 623
SEKR1203 624
SEKR1204 624
SEKR1303 624
SEKR1504 624
SEKR1604 624
SEMX12 621
SEMX15 622
SENN 625
SNEN 657
SNEX 656
SNHF 625
SNHQ1102 626
SNHQ1103 626
SNHQ1203 627
SNHQ1204 627-628
SNHQ1205 629
SNHQ1207 630
SNKN 665
SNMN 656
SONX09 631
SONX12 631
SPEN19 632
SPEN28 632
SPER1904 632
SPER1906 . . . . . 632, 665
SPKN1203 666
SPKN1504 666
SPKR1203 666
SPKR1504 666
SPMT 634
SPMX06 633
SPMX07 633
SPMX09 633
SPMX12 633
T
TNGN1103 658
TNGN1604 658
V
VPGX 636
X
XCHX 662
XNEX04 637
XNEX08 637
XNHQ09 638
XNHQ12 638
XNHQ14 638

XNHQ17 638
XOEX06. . . . . 639, 663
XOEX10. . . . . 640, 663
XOEX12. . . . . 641, 663
XOEX18. 642
XOMX06 639
XOMX10 640
XOMX12 641
XOMX18 642
XPKX12. 643

Milling cutters

In milling Seco uses product specific designation systems, there is no ISO system available for cutters. See example below.

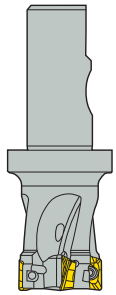

Code key for Turbo milling cutter 217/220.69

R	217	.	69	-	25	32	.	3S	-	12	-	4	A
Right hand rotation	217 = With shank 220 = For arbor		Cutter system		Shank diameter	Cutter diameter		Shank type		Insert size		Effective No. of teeth (Z_c)	A = With through coolant supply AD=Anti vibration material with 'through' coolant supply G = Coarse pitch version for low power machines T = Close pitch version for contouring operations C = With adjustable cassettes N = Coated

Type 0 – Cylindrical

Ex.: R217.69-2525.0-12-3AN

Type 3 – Weldon
Tool chucks acc. to ISO 5414 DIN 1835

Ex.: R217.69-2525.3-12-3AN

Type 3S – Seco/Weldon®
Tool chucks acc. to ISO 5414 DIN 1835

Ex.: R217.69-2532.3S-12-4AN

Type CV
ISO 7388 DIN 69871 Form A ANSI-B5.50 JIS B6339

Ex.: R215.59-CV50050072-12.3K

Type VDI 2814
Type ISO-297/DIN 2080

Ex.: R215.59-50.080.077-12.4

Type Seco-Capto™

C6-217.69-066-12-6AN

Type MAS BT

Ex.: R215.59-BT50.050.059-12.4A

Type HSK

R217.69-HSK63A.32-044-12.3AN

Insert clamping system

Clamping by S - screw

The inserts are clamped by an inclined screw which holds the insert in position in its seat.

Centre lock clamping

The inserts are secured through a centre hole by means of a screw which clamps the insert firmly against the bottom and side of its seat.

Minimaster clamping

The insert is clamped in position by means of a finger-shaped clamping screw which draws the insert into a cone

Square T4

The inserts are secured through a centre hole by means of a screw which clamps the insert firmly against the bottom and side of its seat.

Clamping by a wedge

The inserts are held in position by a wedge and a screw which clamps the insert onto the seat.
(Example shows milling cutter with cassettes).

Clamping by spring action

The inserts are retained by a clamping/spring action into a fixed insert seat

Minimaster Plus clamping

The insert is clamped in position by a thread and fastened by a fixed key or a torque wrench

Code keys inserts

Inserts-Metric series, Extract from ISO 1832—1991

Dimensions refer to theoretical measurements. Nominal dimensions and tolerances on Seco inserts may differ from the table below.

S	E	M	X	12	04	AF	T	N	-	ME12
1	2	3	4	5	6	7	8	9		10

1. Shape

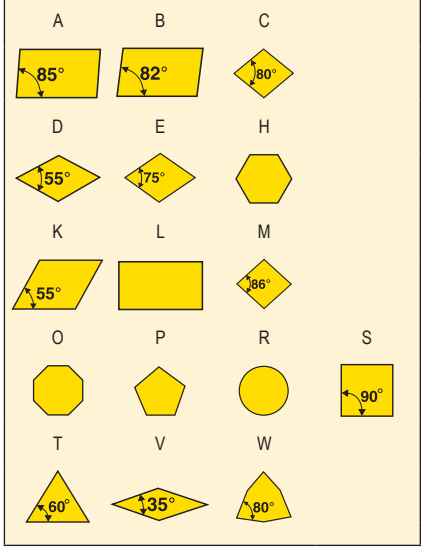

2. Side clearance angle

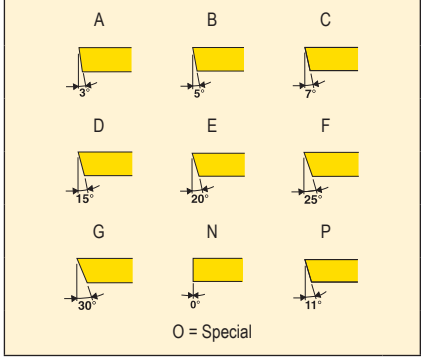

3. Tolerances

Tol.-class	Tolerance +/- mm			For d, dimension mm									
	m	s	d	3,175*	4,76	6,35	9,525	12,7	15,875	19,05	25,4	31,75	38,1*
A	0,005	0,025	0,025	•	•	•	•	•	•	•	•	•	•
E	0,025	0,025	0,025	•	•	•	•	•	•	•	•	•	•
F	0,005	0,025	0,013	•	•	•	•	•	•	•	•	•	•
G	0,025	0,13	0,025	•	•	•	•	•	•	•	•	•	•
H	0,013	0,025	0,013	•	•	•	•	•	•	•	•	•	•
J	0,005	0,025	0,05	•	•	•	•						
	0,005	0,025	0,08					•					
	0,005	0,025	0,10						•	•			
	0,005	0,025	0,13								•		
	0,005	0,025	0,15									•	•
K	0,013	0,025	0,05	•	•	•	•						
	0,013	0,025	0,08					•					
	0,013	0,025	0,10						•	•			
	0,013	0,025	0,13								•		
	0,013	0,025	0,15									•	•
M	0,08	0,13	0,05	•	•	•	•						
	0,13	0,13	0,08					•					
	0,15	0,13	0,10						•	•			
	0,18	0,13	0,13								•		
	0,20	0,13	0,15									•	•
U	0,13	0,13	0,08	•	•	•	•						
	0,20	0,13	0,13					•					
	0,27	0,13	0,18						•	•			
	0,38	0,13	0,25								•	•	•

Inserts-Metric series, Extract from ISO 1832—1991

4 Type

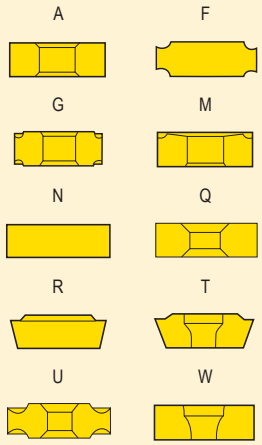

X=Special

5. Cutting edge length

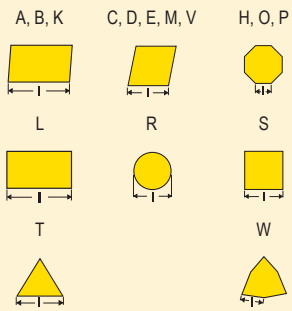

6. Thickness

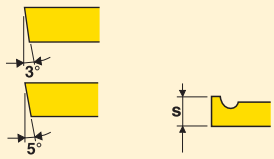

01 = 1,59 mm
T1 = 1,98 mm
02 = 2,38 mm
03 = 3,18 mm
T3 = 3,97 mm
04 = 4,76 mm
05 = 5,56 mm
06 = 6,35 mm
07 = 7,94 mm
08 = 8,00 mm
09 = 9,52 mm

7. Insert with corner chamfer/nose radius

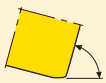

1st letter

A = 45°
D = 60°
E = 75°
F = 85°
P = 90°
Z = Special

2nd letter

A = 3°
B = 5°
C = 7°
D = 15°
E = 20°
Z = Special
F = 25°
G = 30°
N = 0°
P = 11°

Nose radius

M0* = round inserts
00 = sharp
01 = 0,1 mm
02 = 0,2 mm
04 = 0,4 mm
08 = 0,8 mm
12 = 1,2 mm
etc
*Metric version

10. Internal designation

Machining conditions
E = Easy
M = Medium
D = Difficult

8. Cutting edge designation

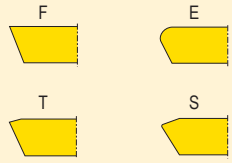

Not mandatory information

9. Direction of cutting

R

Right-rotated

L

Left-rotated

N

Neutral
(R- and L-rotated)

Designation system

The Seco designation system for milling inserts has been developed to provide the user with better guidance concerning the fields of application for the various insert geometries

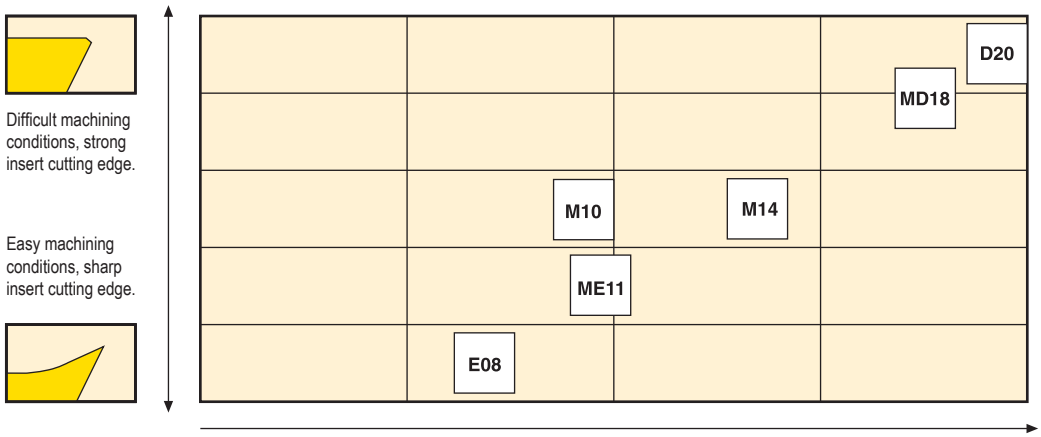

Examples of different insert geometries for a specific insert type

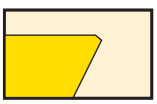

..AFTN-D20 Negative and very protected cutting edge

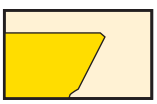

..AFTN-MD18 Negative and protected cutting edge

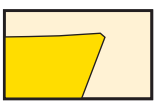

..AFTN-M14 Positive and protected cutting edge

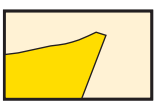

..AFTN-ME11 Very positive and protected cutting edge

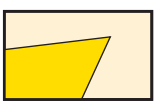

..AFN-M10 Positive and sharp cutting edge

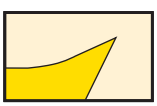

..AFN-E08 Very positive and very sharp cutting edge

Insert grades

Cemented carbide is an alloy of tungsten carbide (WC) and cobalt (Co). Cubic carbides like tantalum carbide (TaC), titanium carbide (TiC) and niobium carbide (NbC) can also be added. Tungsten carbide is the main component and gives the hardness. Cobalt is the binder phase and gives the toughness. Cubic carbides are added in order to affect properties like hot hardness, deformation resistance and chemical wear resistance.

Most modern grades are coated with either CVD (Chemical Vapour Deposition) or PVD (Physical Vapour Deposition) technique. The coating improves the wear resistance of the grade.
CVD-coated grades are suitable for wear resistance in demanding applications with high feed rates and intermediate to high cutting speed.
PVD-coated grades are recommended for applications with low feed rate where high edge toughness is required. PVD-coated grades are suitable for applications with low to intermediate cutting speed.

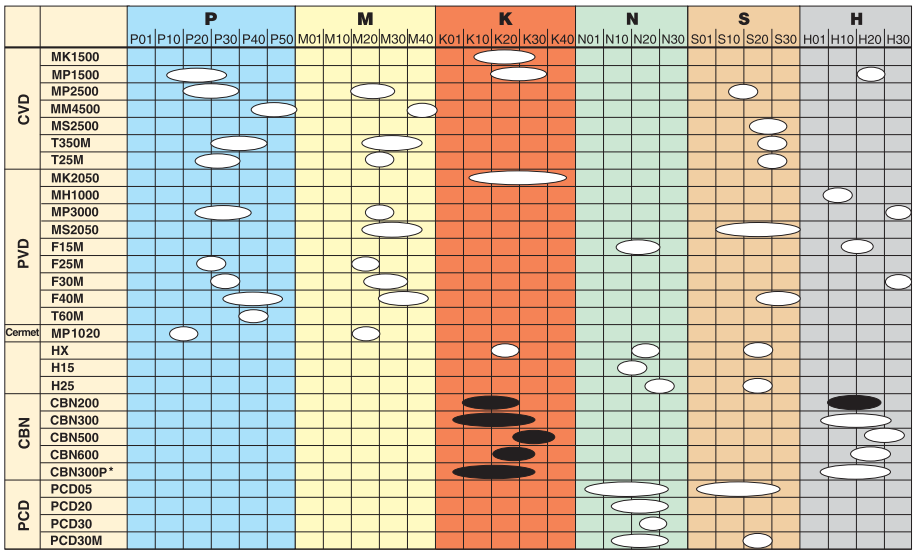

HX, H15 and H25 uncoated
*CBN300P = PVD coating

Insert grades

Basic grades

	F40M	PVD-coated grade for fine to medium rough milling. First choice for milling with small feeds and/or low cutting speeds. Excellent for milling when there is a risk of vibrations and when coolant is used. Recommended for machining superalloys. (Ti, Al) N – TiN
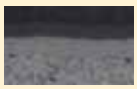	MP2500	CVD-coated grade based on Duratomic™ coating. Basic grade for milling steel and easy/medium difficult stainless steel, with or without coolant. Ti (C, N) – Al_2O_3
	MK1500	CVD-coated grade based on Duratomic™ coating. Basic grade for milling cast iron and nodular cast iron, with or without coolant. Ti (C, N) – Al_2O_3
	MK2050	PVD-coated grade for cast iron, Improved edge integrity. First choice in all cast iron materials. Excellent for milling with and without coolant. (Ti,Si)N/(Ti,Al)N

Complementary CVD coated grades

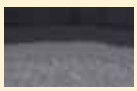	MP1500	Grade for medium rough milling under stable conditions at high cutting speeds and for milling hardened steel. Excellent grade for roughing grey and nodular cast iron. Ti (C, N) – Al_2O_3
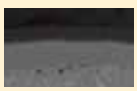	MS2500	Optimization grade for superalloy materials, also suitable for rough milling in tool steel. Ti (C, N) – Al_2O_3
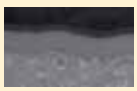	MM4500	Extremly tough grade for duplex stainless steel. Can also be used for a wide range of materials when cutting conditions are unstable.
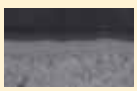	T350M	CVD-coated grade as basic choice for difficult stainless steel and an alternative in difficult operations in steel. Ti (C, N) – Al_2O_3

Complementary PVD coated grades

	MH1000	Extremely hard grade for milling hard steel but also favourable in finishing operations in cast iron. (Ti;Al)N
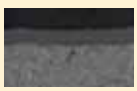	MS2050	PVD-coated grade first choice for machining titanium alloys. Can also be used as a complementary grade for milling stinless steels when increased toughness is needed. (Ti;Al) N – NbN
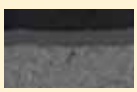	MP3000	Highly wear resistant optimized grade for milling in steel.
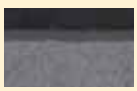	F15M	Hard and wear resistant grade for milling in aluminium and non-ferrous alloys. Excellent grade, in combination with protected cutting edges, for high speed machining in hardened steel. (Ti, Al) N – TiN
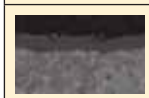	F25M	Tough grade for rough milling in tool steel. (Ti, Al) N – TiN
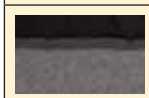	F30M	Basic grade for Minimaster inserts and thread milling inserts. Also suitable for milling stainless steel, hardened steel and superalloys. (Ti, Al) N – TiN
	T60M	Tough grade for Minimaster inserts. Suitable for milling in soft and medium hard steel. (Ti, Al) N – TiN

Insert grades

Uncoated grades

	HX	Wear resistant grade for milling in cast iron and non-ferrous alloys.
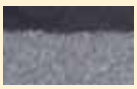	H15	Hard, wear resistant grade for milling in aluminium.
	H25	Tough micro-grain carbide grade for milling in superalloys and aluminium.

Cermet

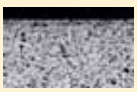	MP1020	Cermet grade for fine to medium rough milling of steel at high cutting speeds and for finishing in austenitic stainless steel. First choice for high demand on surface finishes.

Grades

CBN200 (Tipped and Full-face) 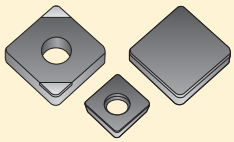	Format: Full-face layer and brazed tips (single sided). Composition: 85% cBN content grade with an average grain size of 2 µm and a Co-W-Al ceramic binder. Coating: No coating
CBN200 (Solid) 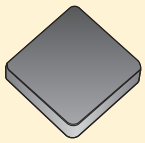	Format: Solid. Composition: 90% cBN content grade with an average grain size of 3-6 µm and a Al ceramic binder. Coating: No coating.
CBN300, CBN300P 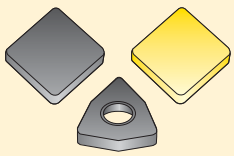	Format: Solid. Composition: 90% cBN content grade with an average grain size of 22 µm and a Al ceramic binder. Coating: CBN300: No coating. CBN300P: (Ti, Al)N coating.
CBN400C 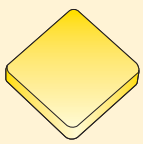	Format: Solid. Composition: 90% cBN content grade with an average grain size of 3-6 µm and a Al ceramic binder. Coating: (Ti, Si)N coating.
CBN500 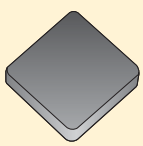	Format: Solid. Composition: 90% cBN content grade with an average grain size of 15 µm and a AlN ceramic binder. Coating: No coating.
CBN600 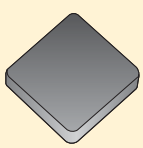	Format: Solid. Composition: 90% cBN content grade with multi modal grain size and AlN ceramic binding. Coating: No coating.

Grades

PCD05 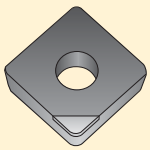	Format: Brazed tips (single sided). Composition: Grade with an average grain size of < 1 µm and a Co binder. Coating: No coating.
PCD20 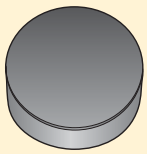 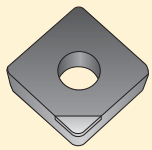	Format: Full-face brazed layer and brazed tips (single sided). Composition: Grade with an average grain size of 10 µm and a Co binder. Coating: No coating.
PCD30 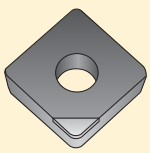	Format: Full-face brazed layer (single sided). Composition: Grade with an average grain size of 25 µm and a Co binder. Coating: No coating.
PCD30M 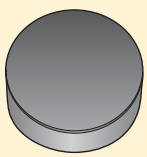	Format: Full-face brazed layer (single sided). Composition: Grade with an average grain size of 2-30 µm and a Co binder. Coating: No coating.

SMG version 2 – Introduction

The foundation for SMG v2 is a classification of workpiece materials based on their type rather than their relative machinability and consequently it contains workpiece materials like composites. It is comprehensive enough, but still easy to identify to which SMG a particular material belongs.

Each SMG has a specific material standard in a specific condition assigned as reference to allow easy adjustment of cutting data for any actual material compared to any Seco reference material see page xxx.

As example the reference materials EN C45E for SMG P4 and EN 42 CrMo 4 for both SMG P5 and SMG H5 see further details in the following tables.

In SMG v2 classification of workpiece materials involves a specific material standard in a specific condition assigned as reference for easy and unambigious adjustment of cutting data for any actual material compared to any Seco reference material. As examples the reference materials EN C45E for SMG P4 and EN 42 CrMo 4 for both SMG P5 and SMG H5 shown below in table 1 where the reference level material property is indicated.

SMG	Description	Properties	Reference
P4	Low alloy general structural steels, 0.25% < C < 0.67%wt Low alloy Quench & Temper steels	520 < R_m < 1200	C 45E R_m = 660 N/mm^2
P5	Structural steels, 0.25% < C < 0.67%wt Quench & Temper steels	550 < R_m < 1200	42 CrMo 4 R_m = 700 N/mm^2

SMG	Description	Properties	Reference
H5	Quenched & Tempered steels	38 < HRC < 56	42 CrMo 4 50 HRC

Focusing specifically on EN 42 CrMo 4 in annealed condition, the ultimate tensile strength R_m may typically vary between Rm = 630 N/mm^2 and R_m = 780 N/mm^2, which provide a reference level for SMG P5. In Quenched & Tempered condition, the ultimate tensile strength R_m may typically be between R_m = 900 N/mm^2 and R_m = 1100 N/mm^2 thus still belongs to SMG P5. However, if hardened above R_m = 1200 N/mm^2 it now belongs to SMG H5.

SMG	EN	W.-Nr	AFNOR	BS	UNI	JIS	AISI / ASTM	GOST	Condition	R_{m_nom}	HRC_{nom}
P5	42 CrMo 4	1.1201	42 CD 4	708 M 40	42 CrMo 4	SCM 440 (H)	4142, 4140	38HM	Annealed	700	
	42 CrMo 4	1.1201	42 CD 4	708 M 40	42 CrMo 4	SCM 440 (H)	4142, 4140	38HM	Quenched & Tempered	1000	
H5	42 CrMo 4	1.1201	42 CD 4	708 M 40	42 CrMo 4	SCM 440 (H)	4142, 4140	38HM	Quenched & Tempered		45
	42 CrMo 4	1.1201	42 CD 4	708 M 40	42 CrMo 4	SCM 440 (H)	4142, 4140	38HM	Quenched & Tempered		50

The EN 42CrMo4 quench & tempered steel could be used to illustrate the machinability dependence of materials' condition.

The graphs below indicate how speed recommendations for a nominal material conditions may be adjusted for relative R_m (left diagram valid for ISO-P) and for relative HRC (valid for ISO-H).

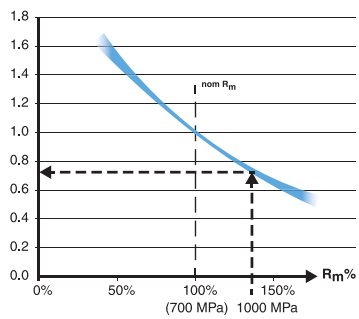

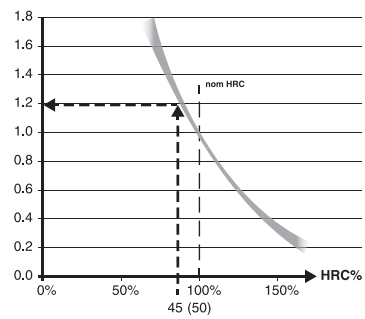

To further illustrate how the SMG v2 SMG P5 nominal v_c can be adjusted to a more accurate recommended v_c we need ultimate tensile strength R_m data and in this case we use the EN 42 CrMo 4 quenched & tempered to R_m = 1000 N/mm^2 according to above table (bold blue arrows).

Assume that we find that the SMG P5 nominal v_c = 280 m/min for a certain product and machining.

Then, actual recommended v_c = 280 m/min x 0,75 = 210 m/min.

Consequently in the SMG H5 the nominal v_c can be adjusted using the hardened EN 42 CrMo 4 at HRC 45 (smaller grey arrows).

Assume that the SMG H5 nominal v_c = 50 m/min for a certain product and machining using a coated cemented carbide tool then, actual recommended v_c = 50 m/min x 1,2 = 60 m/min.

Note that when using PCBN tools cutting data recommendation starts at page xxx.

For further workpiece material details please see page(s) xxx and suggested cutting data at applicable pages.

For more convenient cutting data handling we recommend applicable tools in My Pages – Suggest on www.secotools.com

Square shoulder and slot milling cutters

Cutter	Insert	Recommended a_p		Material suitability					Corner radius (mm)					
				P	M	K	N	S						
Turbo	XO..06	3		■	■	■	■	■	0,2 / 0,4 / 0,8 / 1,6	■	□	■	■	◩
			5											
	XO..10	5		■	■	■	■	■	0,4 / 0,8 / 1,2 / 1,6 / 2,0 / 2,4 / 3,1	■	◩	■	■	◩
			9											
	XO..12	6		■	■	■	■	■	0,4 / 0,8 / 1,2 / 1,6 / 2,0 / 2,4 / 3,1 / 4,0 / 5,0 / 6,3	◩	■	■	■	◩
			11											
	XO..18	9		■	◩	■	■	◩	0,4 / 0,8 / 1,2 / 1,6 / 2,0 / 2,4 / 3,1 / 4,0 / 5,0 / 6,3	□	■	■	■	◩
			17											
ABEX26	ABEX26	13		■	◩	■	-	-	1,6	□	■	■	□	□
			20											
Square T4	LO..08	3		■	◩	■	-	□	0,4 / 0,8 / 1,2 / 1,6	■	◩	◩	-	□
			7											
	LO..12	6		■	◩	■	-	□	0,4 / 0,8 / 1,2 / 1,6	■	◩	◩	-	□
			10											
Square 6	XN..04	2		■	◩	■	-	□	0,4 / 0,8	■	□	◩	-	◩
			3											
	XN..08	4		■	◩	■	-	□	0,4/0,8 / 1,2 / 1,6	□	■	□	-	◩
			7											

1st choice	■	High speed machine with low Power / Torque		Unstable condition suitability	
Alternative choice	◩	Strong stable machine with rigid connection		Ramping ability	
Possible choice	□	Not recommended	-	Plunging ability	

Square shoulder and slot milling cutters

No. of cutting edges	Application	Cutter diameter available with effective number of teeth																						See page
		10	12	14	16	18	20	22	25	32	40	44	50	54	63	66	80	100	125	160	200	250	315	
2		2	2	3	3	4	4																	21
		2	3		4		5		7	8	10													22
2					2	2	2		3	3	4	4	5	5	5	5	8							26
							3		4	5	6	6	7	7	8	8	10	12						27
2							2		2/3	3	4		5	5	6	6	7	8	10	10	12	16		32
									3	4	5		7		8		10	12	14					33
2										2	3		4		4/5	5	5/6	6/7	7/8	7/9	12	16		39
										3	4		5		6		8	9	11	12				40
2															4/5		5	6	7	10				46
															6		7	8						47
4					2	2	2	3	3	3	4		5		6									50
							3		4	4/5	6		7		9									51
4										3	4	4	5	5	6	6	7	9	12					50
									2		5	5	6	6	8		12		15					51
6							2		4	4/5	5		6		7									62
							3		5	6	6/7	6	8/9	8	9/10	9								63
6											3	3	4	4	4/6	6/7	5/7	6/8	7/11	12	8	10	12	68
											4	4	5	5	7		9	11	14	16	12	16	20	69

x — Fixed pocket (x indicates number of teeth)

x — With cassette (x indicates number of teeth)

Slotting and contouring

Optimized for contouring

Milling cutters

In milling Seco uses product specific designation systems, there is no ISO system available for cutters. See example below.

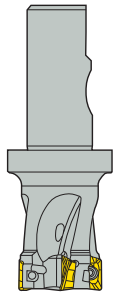

Code key for square shoulder and slot milling cutter 217/220.69

217 = With shank
220 = For arbor

Shank diameter

Shank type

Effective No. of teeth (Z_c)

R 217 . 69 - 25 32 . 3S - 12 - 4 A

Right hand rotation

Cutter system

Cutter diameter

Insert size

A = With through coolant supply
AD=Anti vibration material with through coolant supply
G = Coarse pitch version for low power machines
T = Close pitch version for contouring operations
C = With adjustable cassettes
N = Coated

Dimensions of mounting

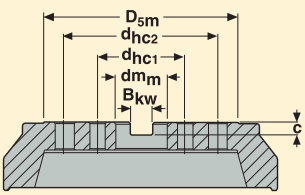

Dimensions in mm						Spindle-nose
D_{5m}	dm_m	B_{kw}	c	d_{hc1}	d_{hc2}	
30-35	16	8,4	5,6	–	–	–
42-47	22	10,4	6.3	–	–	–
48-62	27	12,4	7	–	–	–
60-90	32	14,4	8	–	–	–
90-130	40	16,4	9	66,7	–	(8xxx)
130-270	60	25,7	14	101,6	177,8	(8xxx)

For a more exact D_{5m} and dm_m measurement, see each product table.

Turbo 06 – R217.69-06

Slotting and contouring

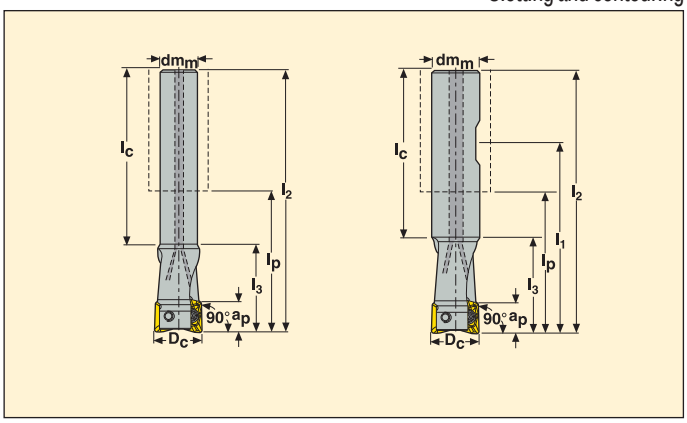

- For insert selection and cutting data recommendations, see page(s) 24-25
- For complete insert programme, see page(s) 639
- For helical interpolation, see page(s) 682-683

Part No.	Type of mounting	Dimensions in mm a_p	D_c	dm_m	l_1	l_2	l_3	l_p	l_c	α° max		KG		Insert
R217.69 -0810.0-06-2N	Cylindrical	5	10	8	–	100	9999	64	82	10,0	2	0,1	60000	XO.X06..
-0810.0-06-2AN	Cylindrical	5	10	8	–	100	9999	64	82	10,0	2	0,1	60000	XO.X06..
-1010.0-06-2N	Cylindrical	5	10	10	–	100	18	62	82	10,0	2	0,1	60000	XO.X06..
-1010.0-06-2AN	Cylindrical	5	10	10	–	55	17	15	38	10,0	2	0,1	60000	XO.X06..
R217.69 -1012.0-06-2N	Cylindrical	5	12	10	–	120	–	80	102	6,5	2	0,1	54400	XO.X06..
-1012.0-06-2AN	Cylindrical	5	12	10	–	120	–	80	102	6,5	2	0,1	54400	XO.X06..
-1212.0-06-2N	Cylindrical	5	12	12	–	120	18	75	102	6,5	2	0,1	54400	XO.X06..
-1212.0-06-2AN	Cylindrical	5	12	12	–	80	18	35	62	6,5	2	0,1	54400	XO.X06..
R217.69 -1214.0-06-3AN	Cylindrical	5	14	12	–	140	–	95	122	5,0	3	0,2	51200	XO.X06..
R217.69 -1416.0-06-3AN	Cylindrical	5	16	14	–	160	–	115	140	4,0	3	0,2	48000	XO.X06..
-1616.0-06-3AN	Cylindrical	5	16	16	–	90	20	42	70	4,0	3	0,2	48000	XO.X06..
-1616.3-06-3AN	Cyl.-Weldon	5	16	16	46	70	20	22	50	4,0	3	0,1	48000	XO.X06..
R217.69 -1618.0-06-4AN	Cylindrical	5	18	16	–	180	–	132	160	3,0	4	0,3	45600	XO.X06..
R217.69 -1820.0-06-4AN	Cylindrical	5	20	18	–	200	–	150	180	2,5	4	0,4	44000	XO.X06..
-2020.0-06-4AN	Cylindrical	5	20	20	–	105	20	55	85	2,5	4	0,3	44000	XO.X06..
-2020.3-06-4AN	Cyl.-Weldon	5	20	20	55	80	20	30	60	2,5	4	0,2	44000	XO.X06..

Ramping angle = α°

Spare Parts

For cutter	Insert screw	Insert key
R217.69-..	C01804-T06P	T06P-3

Please check availability in current price and stock-list
Torque value 0,5 Nm. Torque keys, see page 690

Turbo 06 – R217.69-06

Optimized for contouring

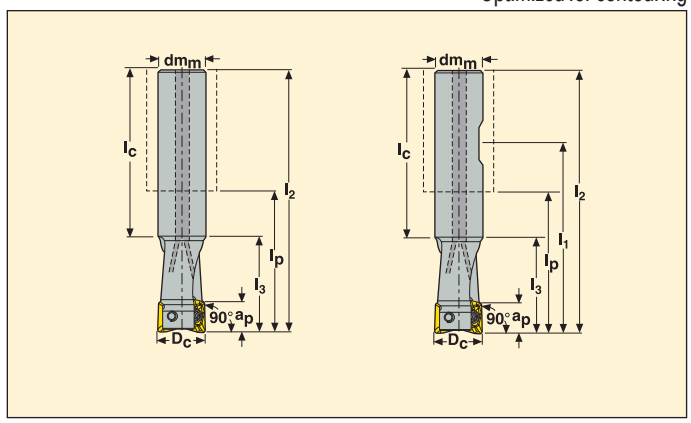

- For insert selection and cutting data recommendations, see page(s) 24-25
- For complete insert programme, see page(s) 639
- For helical interpolation, see page(s) 682-683

Part No.	Type of mounting	Dimensions in mm								α° max		KG		Insert
		a_p	D_c	dm_m	l_1	l_2	l_3	l_p	l_c					
R217.69 -1010.0-06-2AD	Cylindrical	5	10	10	–	55	17	5	38	10,0	2	0,1	60000	XO.X06..
R217.69 -1212.0-06-3AD	Cylindrical	5	12	12	–	80	18	35	62	6,5	3	0,2	54400	XO.X06..
-1212.0-06-3AN	Cylindrical	5	12	12	–	60	18	15	42	6,5	3	0,1	54400	XO.X06..
R217.69 -1616.0-06-4AD	Cylindrical	5	16	16	–	90	20	42	70	4,0	4	0,3	48000	XO.X06..
-1616.0-06-4AN	Cylindrical	5	16	16	–	90	20	42	70	4,0	4	0,2	48000	XO.X06..
-1616.3-06-4AN	Cyl.-Weldon	5	16	16	46	90	20	42	70	4,0	4	0,1	48000	XO.X06..
R217.69 -2020.0-06-5AD	Cylindrical	5	20	20	–	105	20	55	85	2,5	5	0,5	44000	XO.X06..
-2020.0-06-5AN	Cylindrical	5	20	20	–	105	20	55	85	2,5	5	0,3	44000	XO.X06..
-2020.3-06-5AN	Cyl.-Weldon	5	20	20	60	85	20	35	65	2,5	5	0,2	44000	XO.X06..
R217.69 -2025.0-06-7AN	Cylindrical	5	25	20	–	115	–	65	95	1,5	7	0,3	37600	XO.X06..
-2025.3-06-7AN	Cyl.-Weldon	5	25	20	65	90	–	40	70	2,5	7	0,2	37600	XO.X06..
R217.69 -2532.0-06-8AN	Cylindrical	5	32	25	–	130	–	74	105	1,5	8	0,5	33600	XO.X06..
R217.69 -3240.0-06-10AN	Cylindrical	5	40	32	–	140	–	80	115	1,0	10	0,9	28000	XO.X06..

Ramping angle = α°

Spare Parts

For cutter	Insert screw	Insert key
		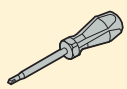
R217.69-..	C01804-T06P	T06P-3

Please check availability in current price and stock-list
Torque value 0,5 Nm. Torque keys, see page 690

Turbo 06 – R217/220.69-06

Optimized for contouring

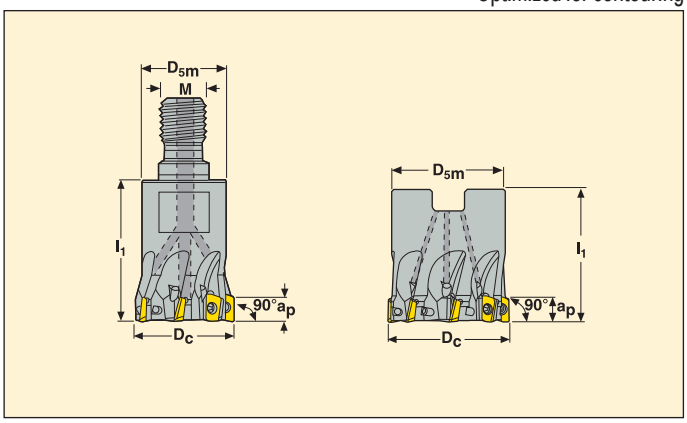

- For insert selection and cutting data recommendations, see page(s) 24-25
- For complete insert programme, see page(s) 639
- For helical interpolation, see page(s) 682-683

Part No.	Type of mounting	Dimensions in mm						α° max		KG		Insert
		a_p	D_c	D_{5m}	dm_m	M	l_1					
R217.69 -0816.RE-06-4AN	Combimaster	5	16	13,5	–	M8	23	7,5	4	0,1	48000	XO.X06..
R217.69 -1020.RE-06-5AN	Combimaster	5	20	18	–	M10	28	4,5	5	0,1	44000	XO.X06..
R217.69 -1225.RE-06-7AN	Combimaster	5	25	21	–	M12	30	2,5	7	0,1	37600	XO.X06..
R217.69 -1632.RE-06-8AN	Combimaster	5	32	28	–	M16	35	1,5	8	0,2	33600	XO.X06..
R220.69 -0032-06-8AN	Arbor	5	32	30	16	–	35	1,0	8	0,2	33600	XO.X06..
R217.69 -1640.RE-06-10AN	Combimaster	5	40	28	–	M16	40	1,5	10	0,3	28000	XO.X06..
R220.69 -0040-06-10AN	Arbor	5	40	35	16	–	35	1,0	10	0,2	18600	XO.X06..

Ramping angle = α°

For Combimaster shanks and dimensions, see pages 588-598

Spare Parts

For cutter	Insert screw	Insert key	Arbor screw
R217.69-..	C01804-T06P	T06P-3	–
R220.69-..	C01804-T06P	T06P-3	TCEI0825

Please check availability in current price and stock-list

Torque value 0,5 Nm. Torque keys, see page 690

R217/220.69-06 – Insert selection

SMG		a_p	f_z		
			100%	30%	10%
P1	XOMX060204R-M05 F40M	2,5	0,070	0,080	0,12
P2	XOMX060204R-M05 F40M	2,5	0,070	0,080	0,12
P3	XOMX060204R-M05 F40M	2,5	0,070	0,075	0,11
P4	XOMX060204R-M05 F40M	2,5	0,065	0,075	0,11
P5	XOMX060204R-M05 F40M	2,5	0,065	0,070	0,11
P6	XOMX060204R-M05 F40M	2,5	0,065	0,070	0,11
P7	XOMX060204R-M05 F40M	2,5	0,065	0,070	0,11
P8	XOMX060204R-M05 F40M	2,5	0,070	0,075	0,11
P11	XOMX060204R-M05 MP3000	2,5	0,065	0,070	0,11
M1	XOMX060204R-M05 F40M	2,5	0,070	0,080	0,12
M2	XOMX060204R-M05 F40M	2,5	0,065	0,070	0,11
M3	XOMX060204R-M05 F40M	2,0	0,055	0,060	0,090
M4	XOMX060204R-M05 MP3000	1,5	0,048	0,050	0,080
M5	XOMX060204R-M05 MM4500	1,5	0,048	0,050	0,080
K1	XOMX060204R-M05 MP3000	2,5	0,070	0,080	0,12
K2	XOMX060204R-M05 MP3000	2,5	0,065	0,070	0,11
K3	XOMX060204R-M05 MP3000	2,5	0,065	0,070	0,11
K4	XOMX060204R-M05 MP3000	2,5	0,065	0,070	0,11
K5	XOMX060204R-M05 MP3000	2,5	0,060	0,065	0,10
K6	XOMX060204R-M05 MP3000	2,5	0,065	0,070	0,11
K7	XOMX060204R-M05 MP3000	2,5	0,060	0,065	0,10
N1	XOEX060204FR-E03 H15	2,5	0,075	0,080	0,12
N2	XOEX060204FR-E03 H15	2,5	0,075	0,080	0,12
N3	XOEX060204FR-E03 H15	2,5	0,075	0,080	0,12
N11	XOEX060204FR-E03 H15	2,5	0,075	0,080	0,12
S1	XOMX060204R-M05 F40M	1,5	0,048	0,050	0,080
S2	XOMX060204R-M05 F40M	1,5	0,048	0,050	0,080
S3	XOMX060204R-M05 F40M	1,5	0,044	0,048	0,075
S11	XOMX060204R-M05 F40M	1,7	0,055	0,060	0,090
S12	XOMX060204R-M05 F40M	1,7	0,055	0,060	0,090
S13	XOMX060204R-M05 F40M	1,5	0,048	0,050	0,080
H8	XOMX060204R-M05 MP3000	1,7	0,034	0,038	0,060
H11	XOMX060204R-M05 MP3000	2,0	0,046	0,050	0,075
H12	XOMX060204R-M05 MP3000	2,0	0,046	0,050	0,075

SMG = Seco material group
f_z = mm/tooth
v_c= m/min
a_e/D_c = %
All cutting data are start values

R217/220.69-06 – Cutting data v_c = (m/min)

	MP1020			MP3000			F40M			MM4500			H15		
SMG	100%	30%	10%	100%	30%	10%	100%	30%	10%	100%	30%	10%	100%	30%	10%
P1	440	430	435	345	455	530	275	365	425	225	295	345	—	—	—
P2	440	440	425	335	440	520	270	350	415	215	285	335	—	—	—
P3	365	360	350	290	380	455	230	305	360	185	250	295	—	—	—
P4	325	320	310	260	335	400	205	270	320	165	220	260	—	—	—
P5	295	285	295	245	325	380	195	260	305	160	210	245	—	—	—
P6	330	320	315	275	365	425	220	295	340	180	240	275	—	—	—
P7	310	305	295	260	345	405	210	275	325	170	225	260	—	—	—
P8	310	305	295	240	320	380	195	255	305	155	210	245	—	—	—
P11	305	295	290	255	335	390	205	270	315	165	220	255	—	—	—
M1	—	—	—	250	330	385	215	280	335	185	245	285	—	—	—
M2	—	—	—	205	275	320	175	235	275	155	205	235	—	—	—
M3	—	—	—	165	215	250	145	185	215	125	160	190	—	—	—
M4	—	—	—	125	170	195	110	145	170	95	125	145	—	—	—
M5	—	—	—	105	140	165	90	120	140	80	105	120	—	—	—
K1	—	—	—	265	345	410	210	280	325	—	—	—	—	—	—
K2	—	—	—	235	310	360	185	250	290	—	—	—	—	—	—
K3	—	—	—	200	260	305	160	210	245	—	—	—	—	—	—
K4	—	—	—	190	250	290	150	200	235	—	—	—	—	—	—
K5	—	—	—	115	150	175	90	120	140	—	—	—	—	—	—
K6	—	—	—	165	220	255	135	175	205	—	—	—	—	—	—
K7	—	—	—	145	195	225	115	155	180	—	—	—	—	—	—
N1	—	—	—	990	1300	1550	790	1050	1225	—	—	—	830	1100	1300
N2	—	—	—	800	1050	1250	640	840	990	—	—	—	670	890	1050
N3	—	—	—	530	700	830	425	560	660	—	—	—	445	590	700
N11	—	—	—	610	800	950	485	640	760	—	—	—	510	680	800
S1	—	—	—	60	80	90	50	70	80	29	38	44	—	—	—
S2	—	—	—	48	65	75	41	55	65	23	31	36	—	—	—
S3	—	—	—	42	55	65	36	48	55	20	27	31	—	—	—
S11	—	—	—	85	110	130	70	95	110	41	55	60	—	—	—
S12	—	—	—	48	65	75	42	55	65	31	41	48	—	—	—
S13	—	—	—	38	50	60	33	44	50	25	33	38	—	—	—
H5	—	—	—	50	65	75	43	55	65	—	—	—	—	—	—
H8	—	—	—	50	70	80	45	60	70	—	—	—	—	—	—
H11	—	—	—	65	85	100	55	70	85	—	—	—	—	—	—
H12	—	—	—	105	135	160	90	115	135	—	—	—	—	—	—
H21	—	—	—	50	70	80	45	60	70	—	—	—	—	—	—

Turbo 10 – R217.69-10

Slotting and contouring

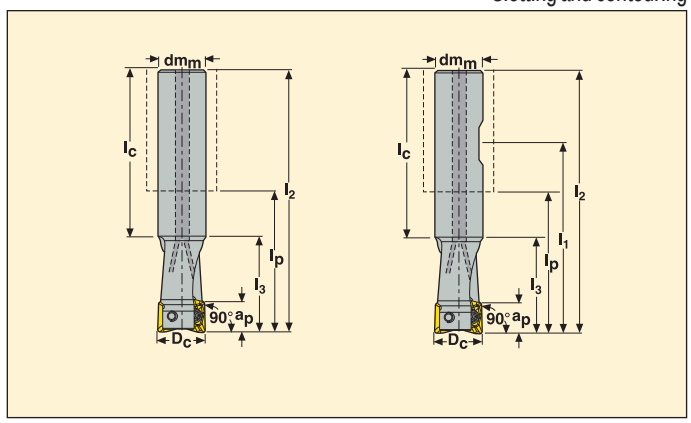

- For insert selection and cutting data recommendations, see page(s) 30-31
- For complete insert programme, see page(s) 640
- For helical interpolation, see page(s) 682-683

Part No.	Type of mounting	Dimensions in mm								α° max		KG		Insert
		a_p	D_c	dm_m	l_1	l_2	l_3	l_p	l_c					
R217.69 -1416.0-10-2A	Cylindrical	9	16	14	–	160	26,5	112,0	134	7,0	2	0,2	29400	XO.X10T3..
-1616.0-10-2A	Cylindrical	9	16	16	–	135	30	87	105	7,5	2	0,2	29400	XO.X10T3..
-1616.3-10-2A	Cyl.-Weldon	9	16	16	54	78	24,0	30	54	7,5	2	0,1	29400	XO.X10T3..
R217.69 -1618.0-10-2A	Cylindrical	9	18	16	–	160	26,5	112	134	7,5	2	0,3	27800	XO.X10T3..
-2018.3-10-2A	Cyl.-Weldon	9	18	20	60	85	29,0	30,0	56	6,0	2	0,2	27800	XO.X10T3..
R217.69 -1820.0-10-2A	Cylindrical	9	20	18	–	200	30	150	170	4,5	2	0,4	26300	XO.X10T3..
-2020.0-10-2A	Cylindrical	9	20	20	–	150	35	100	115	4,5	2	0,4	26300	XO.X10T3..
-2020.3-10-2A	Cyl.-Weldon	9	20	20	65	90	29	40	61	4,5	2	0,2	26300	XO.X10T3..
R217.69 -2225.0-10-3A	Cylindrical	9	25	22	–	200	30	150	170	3,0	3	0,6	23500	XO.X10T3..
-2525.0-10-3A	Cylindrical	9	25	25	–	170	40	114	130	3,0	3	0,6	23500	XO.X10T3..
-2525.3-10-3A	Cyl.-Weldon	9	25	25	69	101	34,0	45	67	3,0	3	0,4	23500	XO.X10T3..
R217.69 -3232.0-10-3A	Cylindrical	9	32	32	–	195	40	135	155	2,0	3	1,1	20800	XO.X10T3..
-3232.3-10-3A	Cyl.-Weldon	9	32	32	74	110	35,0	45,0	75	2,0	3	0,6	20800	XO.X10T3..

Ramping angle = α°

Spare Parts

For cutter	Insert screw	Insert key
		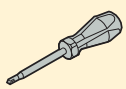
R217.69-..	C02506-T07P	T07P-3

Please check availability in current price and stock-list
Torque value 0,9 Nm, Torque keys, see page 690

Turbo 10 – R217.69-10

Optimized for contouring

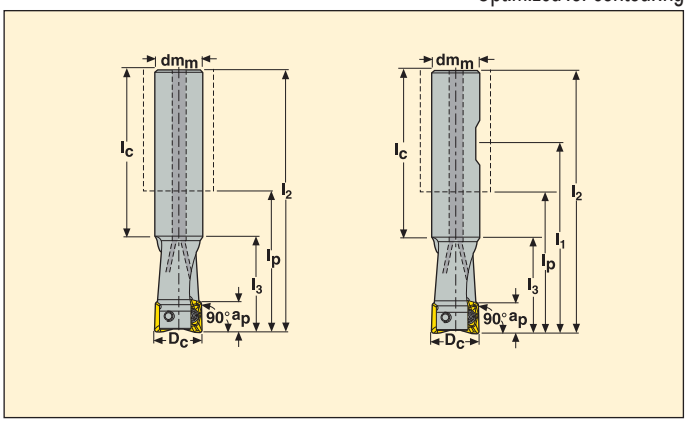

- For insert selection and cutting data recommendations, see page(s) 30-31
- For complete insert programme, see page(s) 640
- For helical interpolation, see page(s) 682-683

Part No.	Type of mounting	Dimensions in mm a_p	D_c	dm_m	l_1	l_2	l_3	l_p	l_c	α° max		KG		Insert
R217.69 -2020.0-10-3A	Cylindrical	9	20	20	–	150	35	100	115	4,5	3	0,3	26300	XO.X10T3..
-2020.3-10-3A	Cyl.-Weldon	9	20	20	65	90	29	40	61	4,5	3	0,2	26300	XO.X10T3..
R217.69 -2525.0-10-4A	Cylindrical	9	25	25	–	170	40	114	130	3,0	4	0,6	23500	XO.X10T3..
-2525.3-10-4A	Cyl.-Weldon	9	25	25	69	101	34,0	45	67	3,0	4	0,3	23500	XO.X10T3..
R217.69 -3232.0-10-5A	Cylindrical	9	32	32	–	195	40	135	155	2,0	5	1,1	20800	XO.X10T3..
-3232.3-10-5A	Cyl.-Weldon	9	32	32	74	110	35,0	45,0	75	2,0	5	0,6	20800	XO.X10T3..

Ramping angle = α°

Spare Parts

For cutter	Insert screw	Insert key
		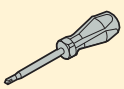
R217.69-..	C02506-T07P	T07P-3

Please check availability in current price and stock-list
Torque value 0,9 Nm, Torque keys, see page 690

Turbo 10 – R217/220.69-10

Slotting and contouring

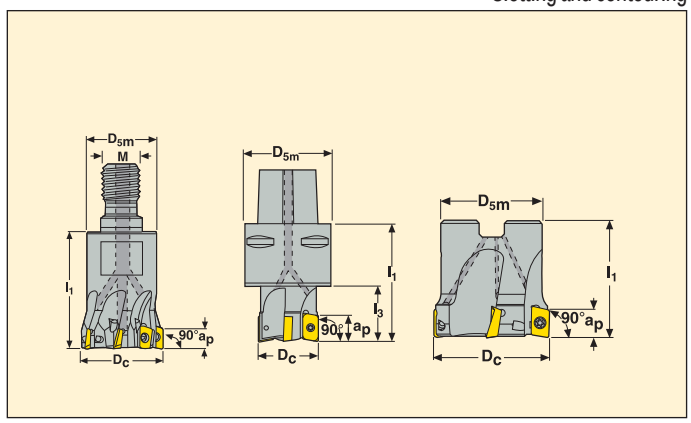

- For insert selection and cutting data recommendations, see page(s) 30-31
- For complete insert programme, see page(s) 640
- For helical interpolation, see page(s) 682-683

Part No.	Type of mounting	Dimensions in mm a_p	D_c	D_{5m}	dm_m	M	l_1	l_3	α° max		KG		Insert
R217.69 -0816.RE-10-2A	Combimaster	9	16	14	–	M8	23	–	7,5	2	0,1	29400	XO.X10T3..
R217.69 -1020.RE-10-2A	Combimaster	9	20	19	–	M10	28	–	4,5	2	0,1	26300	XO.X10T3..
R217.69 -1225.RE-10-3A	Combimaster	9	25	23	–	M12	30	–	3,0	3	0,1	23500	XO.X10T3..
R217.69 -1632.RE-10-3A	Combimaster	9	32	30	–	M16	40	–	2,0	3	0,2	20800	XO.X10T3..
R220.69 -0032-10-4A	Arbor	9	32	30	16	–	35	–	2,0	4	0,2	20800	XO.X10T3..
R217.69 -2040.RE-10-4A	Combimaster	9	40	36,5	–	M20	40	–	1,5	4	0,4	18600	XO.X10T3..
R220.69 -0040-10-4A	Arbor	9	40	35	16	–	40	–	1,5	4	0,2	18600	XO.X10T3..
C4-R217.69 -044-10-4A	Seco-Capto	9	44	40	–	–	60	60	1,3	4	0,6	28000	XO.X10T3..
R220.69 -0050-10-5A	Arbor	9	50	47	22	–	40	–	1,0	5	0,4	16600	XO.X10T3..
C5-R217.69 -054-10-5A	Seco-Capto	9	54	50	–	–	60	60	1,2	5	0,9	14200	XO.X10T3..
R220.69 -0063-10-5A	Arbor	9	63	52	27	–	40	–	0,5	5	0,6	14800	XO.X10T3..
C6-R217.69 -066-10-5A	Seco-Capto	9	66	63	–	–	60	60	0,9	5	1,5	7700	XO.X10T3..
R220.69 -0080-10-8A	Arbor	9	80	62	27	–	50	–	0,5	8	1,1	13200	XO.X10T3..

Ramping angle = α° Spigot size = dm_m

Spare Parts

For cutter	Insert screw	Insert key	Arbor screw
R217.69-..	C02506-T07P	T07P-3	–
R220.69-0032	C02506-T07P	T07P-3	220.17-688
R220.69-0040-0044	C02506-T07P	T07P-3	MC6S8X30
Cx-R217.69-..	C02506-T07P	T07P-3	–
R220.69-0050-0052	C02506-T07P	T07P-3	220.17-692
R220.69-0063	C02506-T07P	T07P-3	220.17-693
R220.69-0080	C02506-T07P	T07P-3	–

Please check availability in current price and stock-list

Torque value 0,9 Nm, Torque keys, see page 690

Turbo 10 – R217/220.69-10

Optimized for contouring

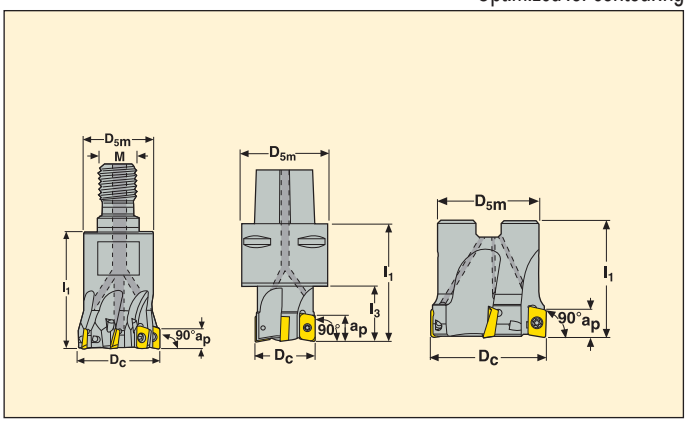

- For insert selection and cutting data recommendations, see page(s) 30-31
- For complete insert programme, see page(s) 640
- For helical interpolation, see page(s) 682-683

Part No.	Type of mounting	Dimensions in mm a_p	D_c	D_{5m}	dm_m	M	l_1	l_3	α° max		KG		Insert
R217.69 -1020.RE-10-3A	Combimaster	9	20	19	–	M10	28	–	4,5	3	0,1	26300	XO.X10T3..
R217.69 -1225.RE-10-4A	Combimaster	9	25	23	–	M12	30	–	3,0	4	0,1	23500	XO.X10T3..
R217.69 -1632.RE-10-5A	Combimaster	9	32	30	–	M16	40	–	2,0	5	0,2	20800	XO.X10T3..
R220.69 -0032-10-5A	Arbor	9	32	30	16	–	35	–	2,0	5	0,2	20800	XO.X10T3..
R217.69 -2040.RE-10-6A	Combimaster	9	40	36,5	–	M20	40	–	1,5	6	0,4	18600	XO.X10T3..
R220.69 -0040-10-6A	Arbor	9	40	35	16	–	40	–	1,5	6	0,2	18600	XO.X10T3..
C4-R217.69 -044-10-6A	Seco-Capto	9	44	40	–	–	60	60	1,3	6	0,6	28000	XO.X10T3..
R220.69 -0050-10-7A	Arbor	9	50	47	22	–	40	–	1,0	7	0,4	16600	XO.X10T3..
C5-R217.69 -054-10-7A	Seco-Capto	9	54	50	–	–	60	60	1,2	7	1,0	14200	XO.X10T3..
R220.69 -0063-10-8A	Arbor	9	63	52	27	–	40	–	0,5	8	0,6	14800	XO.X10T3..
C6-R217.69 -066-10-8A	Seco-Capto	9	66	63	–	–	60	60	0,9	8	1,6	7700	XO.X10T3..
R220.69 -0080-10-10A	Arbor	9	80	62	27	–	50	–	0,5	10	1,1	13200	XO.X10T3..
R220.69 -0100-10-12A	Arbor	9	100	77	32	–	50	–	0,5	12	1,8	11800	XO.X10T3..

Ramping angle = α° Spigot size = dm_m

Spare Parts

For cutter	Insert screw	Insert key	Arbor screw
		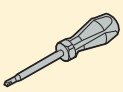	
R217.69-..	C02506-T07P	T07P-3	–
R220.69-0032	C02506-T07P	T07P-3	220.17-688
R220.69-0040	C02506-T07P	T07P-3	MC6S8X30
Cx-R217.69-..	C02506-T07P	T07P-3	–
R220.69-0050	C02506-T07P	T07P-3	220.17-692
R220.69-0063-0066	C02506-T07P	T07P-3	220.17-693
R220.69-0080-0100	C02506-T07P	T07P-3	–

Please check availability in current price and stock-list
Torque value 0,9 Nm, Torque keys, see page 690

R217/220.69-10 – Insert selection

SMG		a_p	f_z		
			100%	30%	10%
P1	XOMX10T308TR-ME07 F40M	4,5	0,11	0,12	0,19
P2	XOMX10T308TR-ME07 F40M	4,5	0,12	0,13	0,19
P3	XOMX10T308TR-ME07 MP2500	4,5	0,11	0,12	0,18
P4	XOMX10T308TR-ME07 MP2500	4,5	0,11	0,12	0,18
P5	XOMX10T308TR-M09 MP2500	4,5	0,12	0,13	0,20
P6	XOMX10T308TR-M09 MP2500	4,5	0,12	0,13	0,20
P7	XOMX10T308TR-M09 MP2500	4,5	0,12	0,13	0,20
P8	XOMX10T308TR-M09 MP2500	4,5	0,12	0,13	0,20
P11	XOMX10T308TR-M09 T350M	4,5	0,12	0,13	0,20
M1	XOEX10T308R-M06 F40M	4,5	0,085	0,095	0,15
M2	XOEX10T308R-M06 F40M	4,5	0,080	0,085	0,13
M3	XOEX10T308R-M06 F40M	3,5	0,065	0,070	0,11
M4	XOEX10T308R-M06 T350M	2,5	0,055	0,065	0,095
M5	XOEX10T308R-M06 T350M	2,5	0,055	0,065	0,095
K1	XOMX10T308TR-M09 MK2050	4,5	0,13	0,14	0,22
K2	XOMX10T308TR-M09 MK2050	4,5	0,12	0,13	0,20
K3	XOMX10T308TR-M09 MK2050	4,5	0,12	0,13	0,20
K4	XOMX10T308TR-M09 MK2050	4,5	0,12	0,13	0,20
K5	XOMX10T308TR-M09 MK2050	4,5	0,11	0,12	0,18
K6	XOMX10T308TR-M09 MK2050	4,5	0,12	0,13	0,20
K7	XOMX10T308TR-M09 MK2050	4,5	0,11	0,12	0,18
N1	XOEX10T308FR-E05 H15	4,5	0,11	0,12	0,19
N2	XOEX10T308FR-E05 H15	4,5	0,11	0,12	0,19
N3	XOEX10T308FR-E05 H15	4,5	0,11	0,12	0,19
N11	XOEX10T308FR-E05 H15	4,5	0,11	0,12	0,19
S1	XOEX10T308R-M06 T350M	2,5	0,055	0,065	0,095
S2	XOEX10T308R-M06 T350M	2,5	0,055	0,065	0,095
S3	XOEX10T308R-M06 T350M	2,5	0,055	0,060	0,090
S11	XOEX10T308R-M06 MS2050	3,0	0,065	0,070	0,11
S12	XOEX10T308R-M06 MS2050	3,0	0,065	0,070	0,11
S13	XOEX10T308R-M06 MS2050	2,5	0,055	0,065	0,095
H5	XOMX10T304TR-M09 MP1500	3,5	0,080	0,085	0,13
H8	XOMX10T308TR-M09 MP3000	3,0	0,065	0,070	0,11
H11	XOMX10T304TR-M09 MP1500	3,5	0,080	0,085	0,13
H12	XOMX10T304TR-M09 MP1500	3,5	0,080	0,085	0,13

SMG = Seco material group
f_z = mm/tooth
v_c= m/min
a_e/D_c = %
All cutting data are start values

R217/220.69-10 – Cutting data v_c = (m/min)

	MP1020			MP1500			MP2500			MP3000			T350M			F40M		
SMG	100%	30%	10%	100%	30%	10%	100%	30%	10%	100%	30%	10%	100%	30%	10%	100%	30%	10%
P1	360	435	465	370	495	570	330	435	510	310	415	480	285	380	445	250	330	385
P2	355	420	450	355	470	560	310	415	495	295	395	470	270	365	430	235	315	375
P3	320	375	400	310	415	490	275	365	435	260	345	410	240	320	375	210	275	330
P4	280	330	350	275	365	430	240	320	380	230	305	360	210	280	330	185	245	290
P5	270	315	335	270	355	410	235	315	365	225	300	345	205	275	315	180	240	275
P6	300	355	375	300	400	470	265	355	415	250	335	390	230	310	360	200	270	315
P7	285	335	355	285	375	440	250	335	390	240	315	370	220	290	340	190	255	295
P8	270	315	335	260	345	410	230	310	365	220	290	345	200	270	315	175	235	275
P11	275	325	345	275	365	430	245	325	380	230	305	360	215	280	330	185	245	290
M1	—	—	—	—	—	—	225	300	360	220	295	350	210	280	335	190	255	305
M2	—	—	—	—	—	—	190	255	295	190	250	290	180	235	275	160	215	250
M3	—	—	—	—	—	—	150	200	235	150	200	235	140	190	220	130	170	200
M4	—	—	—	—	—	—	115	160	185	115	155	180	110	150	170	100	135	155
M5	—	—	—	—	—	—	100	135	155	95	130	150	90	125	145	85	110	130
K1	—	—	—	280	375	445	245	330	395	235	315	370	215	290	345	185	250	300
K2	—	—	—	255	335	390	225	300	345	215	285	325	195	260	300	170	225	260
K3	—	—	—	215	285	330	190	255	290	180	240	275	165	220	255	145	190	220
K4	—	—	—	205	270	315	180	240	280	170	230	265	160	210	245	140	185	210
K5	—	—	—	125	165	195	110	145	170	105	140	160	95	130	150	85	110	130
K6	—	—	—	180	240	275	160	215	245	150	200	235	140	185	215	120	160	185
K7	—	—	—	160	210	245	140	190	220	135	180	205	120	165	190	105	145	165
N1	—	—	—	—	—	—	920	1225	1450	870	1175	1375	—	—	—	700	930	1100
N2	—	—	—	—	—	—	740	1000	1175	700	940	1125	—	—	—	560	760	890
N3	—	—	—	—	—	—	495	660	790	470	630	750	—	—	—	375	500	600
N11	—	—	—	—	—	—	570	760	900	540	720	850	—	—	—	430	580	680
S1	—	—	—	—	—	—	55	75	90	55	75	85	50	70	80	46	65	75
S2	—	—	—	—	—	—	46	60	70	43	60	70	41	55	65	37	50	60
S3	—	—	—	—	—	—	40	55	65	38	50	60	36	49	55	33	44	50
S11	—	—	—	—	—	—	80	105	125	75	100	120	70	95	110	65	85	100
S12	—	—	—	—	—	—	46	60	70	43	60	70	41	55	65	37	50	60
S13	—	—	—	—	—	—	37	50	60	35	47	55	33	45	50	30	41	47
H5	—	—	—	60	75	90	47	60	75	46	60	70	45	60	70	39	50	60
H8	—	—	—	60	80	95	50	65	75	48	65	75	48	65	75	41	55	65
H11	—	—	—	75	100	115	60	80	95	60	80	90	60	75	90	50	65	80
H12	—	—	—	120	160	185	100	130	150	95	125	145	95	125	145	80	105	125
H21	—	—	—	60	80	95	50	65	75	48	65	75	48	65	75	41	55	65

R217/220.69-10 – Cutting data v_c = (m/min)

	MK1500			MK2050			MM4500			MS2050			MS2500			H15		
SMG	100%	30%	10%	100%	30%	10%	100%	30%	10%	100%	30%	10%	100%	30%	10%	100%	30%	10%
P1	—	—	—	295	395	460	200	270	315	250	285	300	365	480	570	—	—	—
P2	—	—	—	285	385	450	190	255	305	245	280	290	355	470	560	—	—	—
P3	—	—	—	250	335	395	170	225	265	205	235	250	310	410	480	—	—	—
P4	—	—	—	220	295	350	150	200	235	180	205	210	275	360	430	—	—	—
P5	—	—	—	210	285	335	145	195	225	175	190	200	260	350	410	—	—	—
P6	—	—	—	240	320	375	165	215	255	195	215	225	295	390	460	—	—	—
P7	—	—	—	225	300	350	155	205	240	185	200	215	275	370	435	—	—	—
P8	—	—	—	210	285	335	140	190	225	175	195	210	260	345	400	—	—	—
P11	—	—	—	220	290	340	150	200	235	180	195	205	270	360	420	—	—	—
M1	—	—	—	—	—	—	165	220	260	215	245	255	255	335	400	—	—	—
M2	—	—	—	—	—	—	140	185	215	170	185	195	210	280	325	—	—	—
M3	—	—	—	—	—	—	110	145	175	115	120	130	165	225	260	—	—	—
M4	—	—	—	—	—	—	85	115	135	80	80	80	130	175	200	—	—	—
M5	—	—	—	—	—	—	70	95	110	65	65	70	110	145	170	—	—	—
K1	325	435	510	310	415	485	—	—	—	250	280	295	280	370	440	—	—	—
K2	290	385	455	275	365	430	—	—	—	210	230	245	250	330	390	—	—	—
K3	245	325	385	230	310	365	—	—	—	180	195	205	210	280	330	—	—	—
K4	235	310	365	220	295	345	—	—	—	170	185	195	200	265	315	—	—	—
K5	145	190	225	135	180	210	—	—	—	95	105	110	125	160	190	—	—	—
K6	205	275	325	195	260	305	—	—	—	150	165	175	175	235	275	—	—	—
K7	180	245	285	175	230	270	—	—	—	120	135	140	155	205	245	—	—	—
N1	—	—	—	—	—	—	—	—	—	—	—	—	—	—	—	720	950	1125
N2	—	—	—	—	—	—	—	—	—	—	—	—	—	—	—	580	770	910
N3	—	—	—	—	—	—	—	—	—	—	—	—	—	—	—	385	510	610
N11	—	—	—	—	—	—	—	—	—	—	—	—	—	—	—	440	590	690
S1	—	—	—	—	—	—	26	36	41	55	70	80	65	85	100	—	—	—
S2	—	—	—	—	—	—	21	29	33	45	55	65	50	70	80	—	—	—
S3	—	—	—	—	—	—	19	25	29	40	50	55	45	60	70	—	—	—
S11	—	—	—	—	—	—	37	49	55	75	95	105	90	120	135	—	—	—
S12	—	—	—	—	—	—	28	38	44	60	75	80	50	70	80	—	—	—
S13	—	—	—	—	—	—	23	31	35	48	60	65	41	55	65	—	—	—
H5	—	—	—	—	—	—	—	—	—	—	—	—	50	70	80	—	—	—
H8	—	—	—	—	—	—	—	—	—	—	—	—	55	70	85	—	—	—
H11	—	—	—	—	—	—	—	—	—	—	—	—	65	90	100	—	—	—
H12	—	—	—	—	—	—	—	—	—	—	—	—	105	140	165	—	—	—

Turbo 12 – R217.69-12

Slotting and contouring

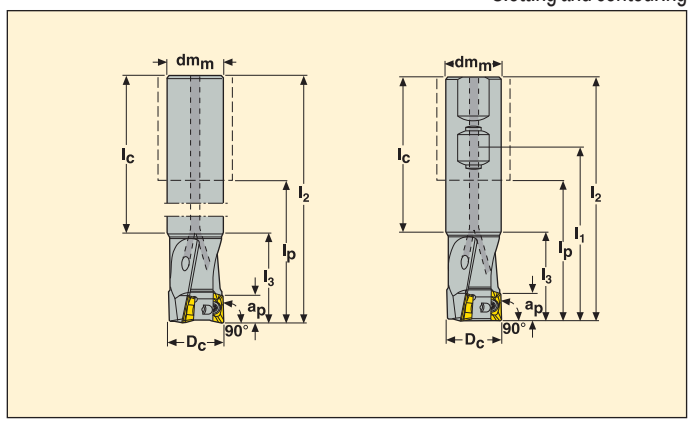

- For insert selection and cutting data recommendations, see page(s) 37-38
- For complete insert programme, see page(s) 640
- For helical interpolation, see page(s) 682-683

Part No.	Type of mounting	Dimensions in mm								α° max		KG		Insert
		a_p	D_c	dm_m	l_1	l_2	l_3	l_p	l_c					
R217.69 -1820.0-12-2AN	Cylindrical	11	20	18	–	150	–	100	120	8,0	2	0,3	23200	XO.X12..
-2020.0-12-2AN	Cylindrical	11	20	20	–	150	30	100	120	8,0	2	0,4	23200	XO.X12..
-2020.3-12-2AN	Cyl.-Weldon	11	20	20	60	85	30	35	55	8,0	2	0,2	23200	XO.X12..
R217.69 -2025.3S-12-3AN	Seco-Weldon	11	25	20	–	100	36	50	50	5,0	3	0,3	20800	XO.X12..
-2225.0-12-2AN	Cylindrical	11	25	22	–	170	–	114	135	5,0	2	0,5	20800	XO.X12..
-2525.0-12-2AN	Cylindrical	11	25	25	–	170	35	114	135	5,0	2	0,6	20800	XO.X12..
-2525.3-12-3AN	Cyl.-Weldon	11	25	25	63	95	32	39	60	5,0	3	0,3	20800	XO.X12..
R217.69 -3032.0-12-3AN	Cylindrical	11	32	30	–	195	–	135	155	3,0	3	1,0	18400	XO.X12..
-3232.0-12-3AN	Cylindrical	11	32	32	–	195	40	135	155	3,0	3	1,1	18400	XO.X12..
-3232.3-12-3AN	Cyl.-Weldon	11	32	32	69	105	37	45	65	3,0	3	0,6	18400	XO.X12..

Ramping angle = α°

Spare Parts

For cutter	Insert screw	Insert key
R217.69-..	C03507-T10P	T10P-3

Please check availability in current price and stock-list
Torque value 2,0 Nm, Torque keys, see page 690

Turbo 12 – R217.69-12

Optimized for contouring

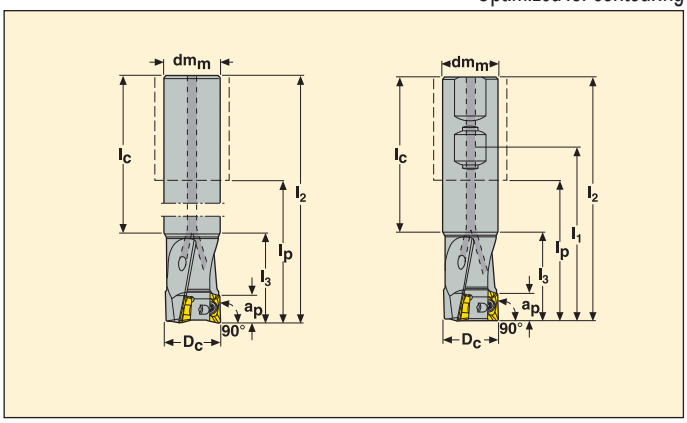

- For insert selection and cutting data recommendations, see page(s) 37-38
- For complete insert programme, see page(s) 640
- For helical interpolation, see page(s) 682-683

Part No.	Type of mounting	Dimensions in mm								α° max		KG		Insert
		a_p	D_c	dm_m	l_1	l_2	l_3	l_p	l_c					
R217.69 -2525.0-12-3AN	Cylindrical	11	25	25	–	170	35	114	135	5,0	3	0,6	20800	XO.X12..
R217.69 -3232.0-12-4AN	Cylindrical	11	32	32	–	195	40	135	155	3,0	4	1,1	18400	XO.X12..
R217.69 -2532.3S-12-4AN	Seco-Weldon	11	32	25	–	110	40	54	56	3,0	4	0,5	18400	XO.X12..
R217.69 -3232.3-12-4AN	Cyl.-Weldon	11	32	32	69	105	37	45	65	3,0	4	0,6	18400	XO.X12..
R217.69 -3240.3S-12-5AN	Seco-Weldon	11	40	32	–	120	46	60	60	2,5	5	0,8	16400	XO.X12..

Ramping angle = α°

Spare Parts

For cutter	Insert screw	Insert key
Dia 25	C03507-T10P	T10P-3
Dia 32	C03508-T10P	T10P-3
Dia 40	C03509-T10P	T10P-3

Please check availability in current price and stock-list
Torque value 2,0 Nm, Torque keys, see page 690

Turbo 12 – R217/220.69-12

Slotting and contouring

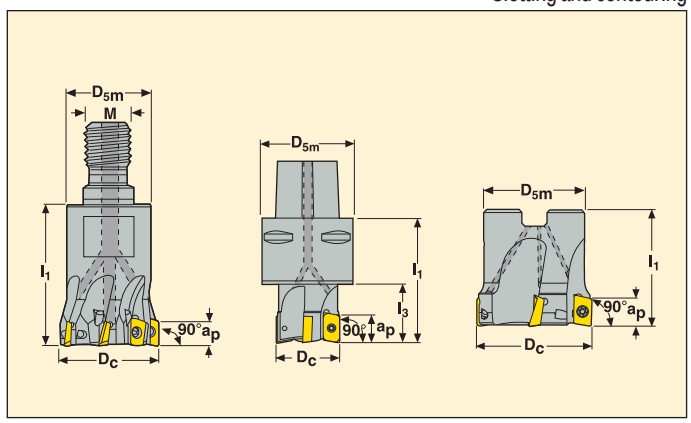

- For insert selection and cutting data recommendations, see page(s) 37-38
- For complete insert programme, see page(s) 640
- For helical interpolation, see page(s) 682-683

Part No.	Type of mounting	Dimensions in mm a_p	D_c	D_{5m}	dm_m	M	l_1	l_3	α° max		KG		Insert
R217.69 -1020.RE-12-2AN	Combimaster	11	20	18	–	M10	28	–	8,0	2	0,1	23200	XO.X12..
R217.69 -1225.RE-12-3AN	Combimaster	11	25	23	–	M12	30	–	5,0	3	0,1	20800	XO.X12..
R217.69 -1632.RE-12-3AN	Combimaster	11	32	30	–	M16	40	–	3,0	3	0,2	18400	XO.X12..
R220.69 -0032-12-3AN	Arbor	11	32	30	16	–	35	–	3,0	3	0,3	18400	XO.X12..
R217.69 -1640.RE-12-4AN	Combimaster	11	40	30	–	M16	40	–	2,5	4	0,3	16400	XO.X12..
-2040.RE-12-4AN	Combimaster	11	40	36,5	–	M20	40	–	2,5	4	0,4	16400	XO.X12..
R220.69 -0040-12-4AN	Arbor	11	40	35	16	–	40	–	2,5	4	0,4	16400	XO.X12..
C5-R217.69 -040-12-4AN	Seco-Capto	11	40	50	–	–	80	57	2,5	4	0,9	16400	XO.X12..
R220.69 -0050-12-5AN	Arbor	11	50	47	22	–	40	–	2,0	5	0,4	14800	XO.X12..
C5-R217.69 -054-12-5AN	Seco-Capto	11	54	50	–	–	60	60	1,5	5	1,0	14200	XO.X12..
R220.69 -0063-12-6AN	Arbor	11	63	52	27	–	40	–	1,5	6	0,5	13200	XO.X12..
R220.69 -0080-12-7AN	Arbor	11	80	62	27	–	50	–	1,0	7	1,1	11600	XO.X12..
R220.69 -0100-12-8AN	Arbor	11	100	77	32	–	50	–	0,5	8	1,7	10400	XO.X12..
-0125-12-10AN	Arbor	11	125	90	40	–	63	–	0,5	10	3,2	9200	XO.X12..

Ramping angle = α° Spigot size = dm_m

For Combimaster shanks and dimensions, see pages 588-598

Spare Parts

For cutter	Insert screw	Insert key	Arbor screw
R217.69-.. Ø20-25	C03507-T10P	T10P-3	–
R217.69-.. Ø32	C03508-T10P	T10P-3	–
R220.69-0032	C03508-T10P	T10P-3	220.17-688
R217.69- Ø40	C03509-T10P	T10P-3	–
R220.69-0040	C03509-T10P	T10P-3	MC6S8X30
C5-R217.69-..	C03509-T10P	T10P-3	–
R220.69-0050	C03509-T10P	T10P-3	220.17-692
R220.69-0063	C03509-T10P	T10P-3	220.17-693
R220.69-0080-0125	C03509-T10P	T10P-3	–

Please check availability in current price and stock-list
Torque value 2,0 Nm, Torque keys, see page 690

Turbo 12 – R217/220.69-12

Optimized for contouring

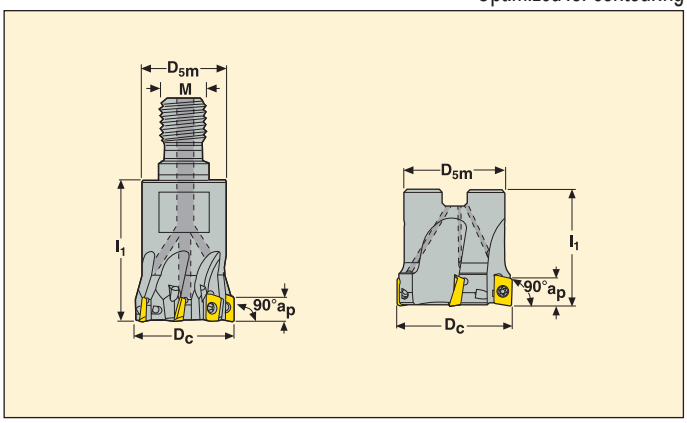

- For insert selection and cutting data recommendations, see page(s) 37-38
- For complete insert programme, see page(s) 640
- For helical interpolation, see page(s) 682-683

Part No.	Type of mounting	Dimensions in mm						α° max		KG		Insert
		a_p	D_c	D_{5m}	dm_m	M	l_1					
R217.69 -1632.RE-12-4AN	Combimaster	11	32	30	–	M16	40	3,0	4	0,2	18400	XO.X12..
R220.69 -0032-12-4AN	Arbor	11	32	30	16	–	35	3,0	4	0,3	18400	XO.X12..
R217.69 -1640.RE-12-5AN	Combimaster	11	40	30	–	M16	40	2,5	5	0,3	16400	XO.X12..
-2040.RE-12-5AN	Combimaster	11	40	36,5	–	M20	40	2,5	5	0,4	16400	XO.X12..
R220.69 -0040-12-5AN	Arbor	11	40	35	16	–	40	2,5	5	0,2	16400	XO.X12..
R220.69 -0050-12-7AN	Arbor	11	50	47	22	–	40	2,0	7	0,4	14800	XO.X12..
R220.69 -0063-12-8AN	Arbor	11	63	52	27	–	40	1,5	8	0,6	13200	XO.X12..
R220.69 -0080-12-10AN	Arbor	11	80	62	27	–	50	1,0	10	1,0	11600	XO.X12..
R220.69 -0100-12-12AN	Arbor	11	100	77	32	–	50	0,5	12	1,7	10400	XO.X12..
R220.69 -0125-12-14AN	Arbor	11	125	90	40	–	63	0,5	14	3,2	9200	XO.X12..

Ramping angle = α° Spigot size = dm_m

For Combimaster shanks and dimensions, see pages 588-598

Spare Parts

For cutter	Insert screw	Insert key	Arbor screw
R217.69- Ø32	C03508-T10P	T10P-3	–
R220.69-0032	C03507-T10P	T10P-3	220.17-688
R217.69- Ø40	C03509-T10P	T10P-3	–
R220.69-0040	C03509-T10P	T10P-3	MC6S8X30
R220.69-0050	C03509-T10P	T10P-3	220.17-692
R220.69-0063	C03509-T10P	T10P-3	220.17-693
R220.69-0080-0125	C03509-T10P	T10P-3	–

Please check availability in current price and stock-list
Torque value 2,0 Nm, Torque keys, see page 690

Turbo 12 – R220.69-12C

Slotting and contouring

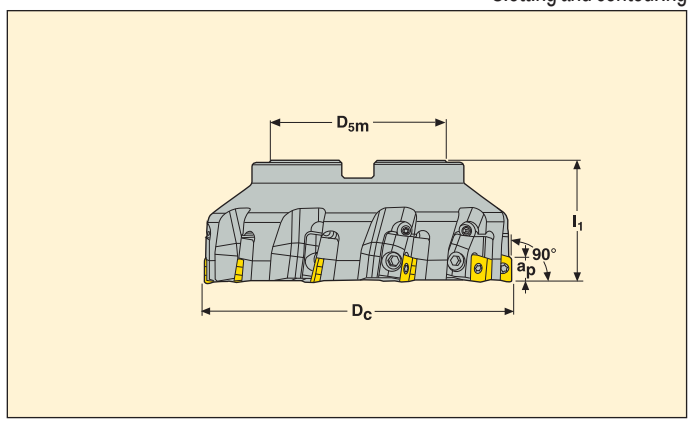

- For insert selection and cutting data recommendations, see page(s) 37-38
- For complete insert programme, see page(s) 640
- For helical interpolation, see page(s) 682-683

Part No.	Type of mounting	Dimensions in mm						KG		Insert
		a_p	D_c	D_{5m}	dm_m	l_1				
R220.69 -0125-12-8CN	Arbor	11	125	90	40	63	8	3,1	9200	XO.X12..
-8160-12-10CN	Arbor	11	160	90	40	63	10	5,3	8200	XO.X12..
-8200-12-12CN	Arbor	11	200	130	60	63	12	7,4	7300	XO.X12..
-8250-12-16CN	Arbor	11	250	130	60	63	16	14,8	6500	XO.X12..

Ramping angle = α°

Spare Parts

For cutter	Setting gauge	Insert screw	Insert key	Cassette screw	Cassette
					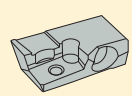
R220.69-0125-8250	AU1114T-T15P	C03509-T10P	T10P-3	FS96018	XO12PRN

Please check availability in current price and stock-list

Torque value 2,0 Nm, Torque keys, see page 690

R217/220.69-12 – Insert selection

SMG		a_p	f_z		
			100%	30%	10%
P1	XOMX120408TR-ME08 F40M	5,0	0,14	0,16	0,24
P2	XOMX120408TR-ME08 F40M	5,0	0,14	0,16	0,24
P3	XOMX120408TR-ME08 MP2500	5,0	0,14	0,15	0,22
P4	XOMX120408TR-ME08 MP2500	5,0	0,13	0,15	0,22
P5	XOMX120408TR-M12 MP2500	5,0	0,16	0,17	0,26
P6	XOMX120408TR-M12 MP2500	5,0	0,16	0,17	0,26
P7	XOMX120408TR-M12 MP2500	5,0	0,16	0,17	0,26
P8	XOMX120408TR-M12 MP2500	5,0	0,16	0,18	0,28
P11	XOMX120408TR-M12 T350M	5,0	0,16	0,17	0,26
M1	XOEX120408R-M07 F40M	5,0	0,12	0,13	0,19
M2	XOEX120408R-M07 F40M	5,0	0,11	0,11	0,18
M3	XOEX120408R-M07 F40M	4,5	0,085	0,090	0,14
M4	XOEX120408R-M07 T350M	3,0	0,075	0,080	0,13
M5	XOEX120408R-M07 T350M	3,0	0,075	0,080	0,13
K1	XOMX120408TR-M12 MK2050	5,0	0,17	0,19	0,30
K2	XOMX120408TR-M12 MK2050	5,0	0,16	0,17	0,26
K3	XOMX120408TR-M12 MK2050	5,0	0,16	0,17	0,26
K4	XOMX120408TR-M12 MK2050	5,0	0,16	0,17	0,26
K5	XOMX120408TR-MD13 MK2050	5,0	0,15	0,17	0,26
K6	XOMX120408TR-MD13 MK2050	5,0	0,17	0,19	0,28
K7	XOMX120408TR-MD13 MK2050	5,0	0,15	0,17	0,26
N1	XOEX120408FR-E06 H15	5,0	0,13	0,14	0,22
N2	XOEX120408FR-E06 H15	5,0	0,13	0,14	0,22
N3	XOEX120408FR-E06 H15	5,0	0,13	0,14	0,22
N11	XOEX120408FR-E06 H15	5,0	0,13	0,14	0,22
S1	XOEX120408R-M07 T350M	3,0	0,075	0,080	0,13
S2	XOEX120408R-M07 T350M	3,0	0,075	0,080	0,13
S3	XOEX120408R-M07 T350M	3,0	0,070	0,075	0,12
S11	XOEX120408R-M07 MS2050	4,0	0,085	0,095	0,14
S12	XOEX120408R-M07 MS2050	4,0	0,085	0,095	0,14
S13	XOEX120408R-M07 MS2050	3,0	0,075	0,080	0,13
H5	XOMX120408TR-MD13 MP1500	4,5	0,12	0,13	0,20
H8	XOMX120408TR-MD13 MP2500	4,0	0,090	0,10	0,15
H11	XOMX120408TR-MD13 MP3000	4,5	0,12	0,13	0,20
H12	XOMX120408TR-MD13 MP1500	4,5	0,12	0,13	0,20
H21	XOMX120408TR-D14 MP1500	4,0	0,095	0,11	0,16

SMG = Seco material group
f_z = mm/tooth
v_c= m/min
a_e/D_c = %
All cutting data are start values

R217/220.69-12 – Cutting data v_c = (m/min)

	MP1020			MP1500			MP2500			MP3000			T350M			F40M		
SMG	100%	30%	10%	100%	30%	10%	100%	30%	10%	100%	30%	10%	100%	30%	10%	100%	30%	10%
P1	400	460	490	295	390	465	295	395	460	300	400	465	260	345	405	225	300	350
P2	375	440	475	285	380	455	290	380	450	285	380	455	250	330	395	220	290	340
P3	335	385	415	250	330	390	250	335	395	250	335	395	215	290	345	190	250	300
P4	295	340	365	220	295	350	225	295	350	220	295	350	195	255	305	170	220	265
P5	295	330	350	210	285	335	215	285	335	215	290	340	185	250	290	160	215	255
P6	330	370	390	235	320	375	240	320	375	245	325	380	210	280	325	180	245	285
P7	310	350	370	225	300	355	225	300	355	230	305	360	195	265	310	170	230	270
P8	285	325	345	210	280	330	210	280	335	210	280	335	180	245	290	160	210	255
P11	305	340	360	215	290	345	220	295	345	225	295	350	190	255	300	165	220	260
M1	—	—	—	—	—	—	210	275	325	215	285	340	195	255	305	175	230	275
M2	—	—	—	—	—	—	170	230	270	180	240	280	160	215	250	145	195	230
M3	—	—	—	—	—	—	140	185	220	145	195	225	130	170	205	120	155	185
M4	—	—	—	—	—	—	110	145	170	110	150	175	100	135	160	90	125	145
M5	—	—	—	—	—	—	90	120	140	95	125	145	85	115	130	75	105	120
K1	—	—	—	225	300	360	230	300	355	225	300	360	200	260	310	175	230	270
K2	—	—	—	200	270	320	200	270	315	205	275	320	175	235	275	155	205	240
K3	—	—	—	170	230	270	170	230	270	175	230	270	150	200	235	130	175	205
K4	—	—	—	160	220	255	165	220	255	165	220	260	140	190	225	125	165	195
K5	—	—	—	100	135	155	100	135	155	100	135	155	85	115	135	75	100	120
K6	—	—	—	145	190	225	145	195	225	145	195	230	125	170	195	110	145	170
K7	—	—	—	130	170	200	125	170	200	130	170	200	110	150	175	95	130	150
N1	—	—	—	—	—	—	840	1125	1325	840	1125	1325	—	—	—	640	840	1000
N2	—	—	—	—	—	—	680	900	1075	680	910	1075	—	—	—	510	680	810
N3	—	—	—	—	—	—	450	600	710	450	610	720	—	—	—	340	455	540
N11	—	—	—	—	—	—	520	690	820	520	690	820	—	—	—	390	520	620
S1	—	—	—	—	—	—	55	70	80	50	70	80	47	65	75	43	60	65
S2	—	—	—	—	—	—	42	55	65	42	55	65	38	50	60	35	46	55
S3	—	—	—	—	—	—	37	50	60	37	49	60	33	44	50	30	40	47
S11	—	—	—	—	—	—	75	95	115	75	100	115	65	85	105	60	80	95
S12	—	—	—	—	—	—	43	55	65	42	55	65	38	50	60	35	46	55
S13	—	—	—	—	—	—	34	46	55	34	45	55	30	41	48	28	37	43
H5	—	—	—	47	65	75	43	55	65	44	60	70	41	55	65	36	47	55
H8	—	—	—	50	70	80	46	60	70	47	60	75	44	60	70	38	50	60
H11	—	—	—	60	80	95	55	75	85	55	75	90	55	70	80	46	60	70
H12	—	—	—	95	130	155	90	120	140	90	120	140	85	115	135	75	100	115
H21	—	—	—	50	70	80	46	60	70	47	60	75	44	60	70	38	50	60

R217/220.69-12 – Cutting data v_c = (m/min)

	MK1500			MK2050			MM4500			MS2050			MS2500			H15		
SMG	100%	30%	10%	100%	30%	10%	100%	30%	10%	100%	30%	10%	100%	30%	10%	100%	30%	10%
P1	—	—	—	260	345	410	180	245	285	270	320	350	345	460	540	—	—	—
P2	—	—	—	250	335	390	175	235	275	265	315	340	330	440	520	—	—	—
P3	—	—	—	215	295	345	150	205	245	225	265	290	290	385	455	—	—	—
P4	—	—	—	195	260	300	135	180	215	200	235	255	255	340	400	—	—	—
P5	—	—	—	185	245	295	130	175	205	190	220	235	250	330	390	—	—	—
P6	—	—	—	210	280	330	145	195	230	210	245	265	280	370	435	—	—	—
P7	—	—	—	195	265	310	140	185	215	200	230	250	265	350	410	—	—	—
P8	—	—	—	185	245	290	130	170	205	190	225	240	245	325	385	—	—	—
P11	—	—	—	190	260	305	135	180	210	195	225	245	255	340	400	—	—	—
M1	—	—	—	—	—	—	150	200	235	230	275	300	235	315	375	—	—	—
M2	—	—	—	—	—	—	125	170	195	185	215	230	200	265	310	—	—	—
M3	—	—	—	—	—	—	105	135	160	135	150	160	160	215	250	—	—	—
M4	—	—	—	—	—	—	80	105	125	95	105	110	125	165	195	—	—	—
M5	—	—	—	—	—	—	65	90	105	80	85	90	100	140	160	—	—	—
K1	285	385	445	270	365	420	—	—	—	265	320	345	260	350	415	—	—	—
K2	255	335	400	240	320	380	—	—	—	230	265	285	235	315	370	—	—	—
K3	215	285	340	205	270	320	—	—	—	195	225	245	200	265	315	—	—	—
K4	205	270	325	195	260	310	—	—	—	185	215	230	190	255	300	—	—	—
K5	125	165	200	120	160	185	—	—	—	110	125	135	115	155	180	—	—	—
K6	180	240	285	170	225	270	—	—	—	165	190	205	170	225	265	—	—	—
K7	160	215	255	155	205	240	—	—	—	140	160	170	150	200	230	—	—	—
N1	—	—	—	—	—	—	—	—	—	—	—	—	—	—	—	700	930	1100
N2	—	—	—	—	—	—	—	—	—	—	—	—	—	—	—	560	750	880
N3	—	—	—	—	—	—	—	—	—	—	—	—	—	—	—	375	500	590
N11	—	—	—	—	—	—	—	—	—	—	—	—	—	—	—	430	570	670
S1	—	—	—	—	—	—	24	33	38	49	65	75	60	80	95	—	—	—
S2	—	—	—	—	—	—	20	26	30	40	50	60	48	65	75	—	—	—
S3	—	—	—	—	—	—	17	23	27	35	46	50	42	55	65	—	—	—
S11	—	—	—	—	—	—	34	45	55	65	90	100	85	115	130	—	—	—
S12	—	—	—	—	—	—	26	34	41	50	70	75	49	65	75	—	—	—
S13	—	—	—	—	—	—	21	28	33	42	55	65	39	50	60	—	—	—
H5	—	—	—	—	—	—	—	—	—	—	—	—	49	65	75	—	—	—
H8	—	—	—	—	—	—	—	—	—	—	—	—	50	70	80	—	—	—
H11	—	—	—	—	—	—	—	—	—	—	—	—	65	85	100	—	—	—
H12	—	—	—	—	—	—	—	—	—	—	—	—	100	135	160	—	—	—
H21	—	—	—	—	—	—	—	—	—	—	—	—	50	70	80	—	—	—

Turbo 18 – R217.69-18

Slotting and contouring

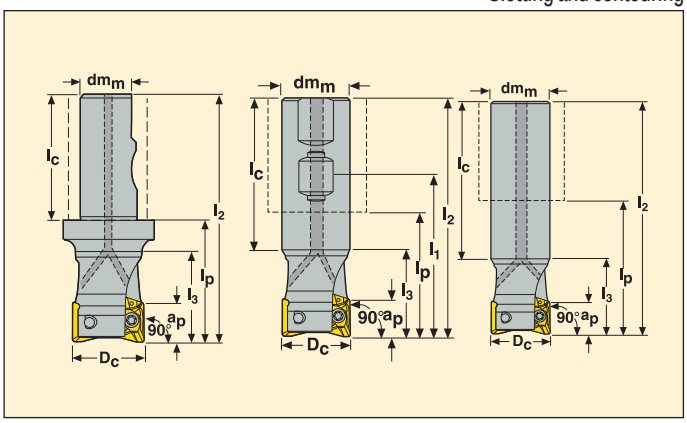

- For insert selection and cutting data recommendations, see page(s) 44 – 45
- For complete insert programme, see page(s) 642
- For helical interpolation, see page(s) 682-683

Part No.	Type of mounting	Dimensions in mm a_p	D_c	dm_m	l_1	l_2	l_3	l_p	l_c	α° max		KG		Insert
R217.69 -2532.3S-18-2AN	Seco-Weldon	17	32	25	–	109,5	40	54	55,5	7,0	2	0,5	11100	XO.X18..
-3032.0-18-2AN	Cylindrical	17	32	30	–	210	–	150	170	7,0	2	1,1	11100	XO.X18..
-3232.0-18-2AN	Cylindrical	17	32	32	–	210	40	150	170	7,0	2	1,2	11100	XO.X18..
-3232.3-18-2AN	Cyl.-Weldon	17	32	32	74	110	38	50	70	7,0	2	0,6	11100	XO.X18..
R217.69 -3240.0-18-3AN	Cylindrical	17	40	32	–	210	–	150	165	4,5	3	1,2	9900	XO.X18..
-3240.3S-18-3AN	Seco-Weldon	17	40	32	–	119,5	46	60	59,5	4,5	3	0,8	9900	XO.X18..

Ramping angle = α°

Spare Parts

For cutter	Insert screw	Insert key
R217.69-..	C04510-T20P	T20P-3

Please check availability in current price and stock-list
Torque value 5,0 Nm, Torque keys, see page 690

Turbo 18 – R217.69-18

Optimized for contouring

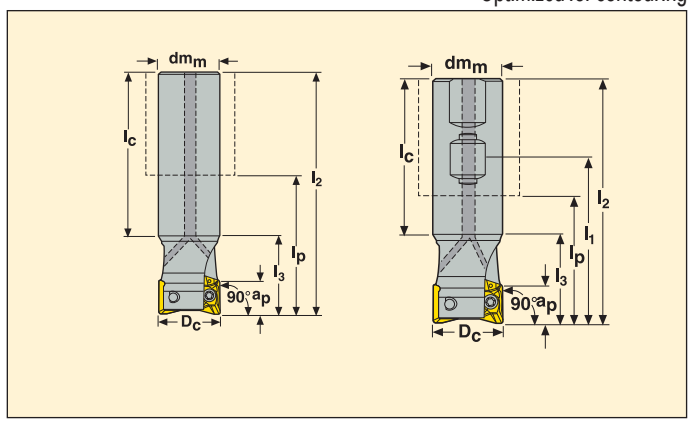

- For insert selection and cutting data recommendations, see page(s) 44 – 45
- For complete insert programme, see page(s) 642
- For helical interpolation, see page(s) 682-683

Part No.	Type of mounting	Dimensions in mm								α° max		KG		Insert
		a_p	D_c	dm_m	l_1	l_2	l_3	l_p	l_c					
R217.69 -3232.0-18-3AN	Cylindrical	17	32	32	–	210	40	150	170	7,0	3	1,2	11100	XO.X18..
-3232.3-18-3AN	Cyl.-Weldon	17	32	32	74	110	38	50	70	7,0	3	0,6	11100	XO.X18..
R217.69 -3240.0-18-4AN	Cylindrical	17	40	32	–	210	–	150	165	4,5	4	1,2	9900	XO.X18..

Ramping angle = α°

Spare Parts

For cutter	Insert screw	Insert key
R217.69-..	C04510-T20P	T20P-3

Please check availability in current price and stock-list
Torque value 5,0 Nm, Torque keys, see page 690

Turbo 18 – R217/220.69-18

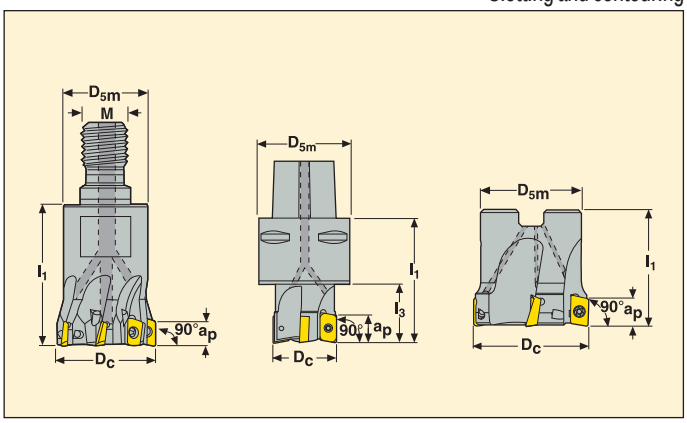

- For insert selection and cutting data recommendations, see page(s) 44 – 45
- For complete insert programme, see page(s) 642
- For helical interpolation, see page(s) 682-683

Part No.	Type of mounting	Dimensions in mm a_p	D_c	D_{5m}	dm_m	M	l_1	l_3	α° max		KG		Insert
R217.69 -1632.RE-18-2AN	Combimaster	17	32	30	–	M16	45	–	7,0	2	0,2	11100	XO.X18..
R217.69 -1640.RE-18-3AN	Combimaster	17	40	30	–	M16	45	–	4,5	3	0,3	9900	XO.X18..
-2040.RE-18-4AN	Combimaster	17	40	36,5	–	M20	45	–	4,5	4	0,4	9900	XO.X18..
C6-R217.69 -040-18-3AN	Seco-Capto	17	40	63	–	–	80	55	4,5	3	1,1	9900	XO.X18..
R220.69 -0050-18-4AN	Arbor	17	50	47	22	–	40	–	3,0	4	0,3	8900	XO.X18..
R220.69 -0063-18-4AN	Arbor	17	63	52	27	–	40	–	2,0	4	0,5	7900	XO.X18..
-0063-18-5AN	Arbor	17	63	52	27	–	40	–	2,0	5	0,5	7900	XO.X18..
C6-R217.69 -066-18-5AN	Seco-Capto	17	66	63	–	–	60	60	2,4	5	1,4	7700	XO.X18..
R220.69 -0080-18-5AN	Arbor	17	80	62	27	–	50	–	1,5	5	1,0	7000	XO.X18..
-0080-18-6AN	Arbor	17	80	62	27	–	50	–	1,5	6	1,0	7000	XO.X18..
C6-R217.69 -080-18-6AN	Seco-Capto	17	80	63	–	–	60	60	1,5	6	1,7	7000	XO.X18..
R220.69 -0100-18-6AN	Arbor	17	100	77	32	–	50	–	1,0	6	1,6	6300	XO.X18..
-0100-18-7AN	Arbor	17	100	77	32	–	50	–	1,0	7	1,6	6300	XO.X18..
R220.69 -0125-18-7AN	Arbor	17	125	90	40	–	63	–	1,0	7	3,1	5600	XO.X18..
-0125-18-8AN	Arbor	17	125	90	40	–	63	–	1,0	8	3,0	5600	XO.X18..
R220.69 -8160-18-7N	Arbor	17	160	90	40	–	63	–	0,5	7	4,5	5000	XO.X18..
-8160-18-9N	Arbor	17	160	90	40	–	63	–	0,5	9	4,6	5000	XO.X18..

Ramping angle = α° Spigot size = dm_m

For Combimaster shanks and dimensions, see pages 588-598

Spare Parts

For cutter	Insert screw	Insert key	Arbor screw
R217.69-..	C04510-T20P	T20P-3	–
R220.69-0050	C04510-T20P	T20P-3	220.17-692
R220.69-0063	C04510-T20P	T20P-3	220.17-693
R220.69-0080-8160	C04510-T20P	T20P-3	–

Please check availability in current price and stock-list
Torque value 5,0 Nm, Torque keys, see page 690

Turbo 18 – R217/220.69-18

Optimized for contouring

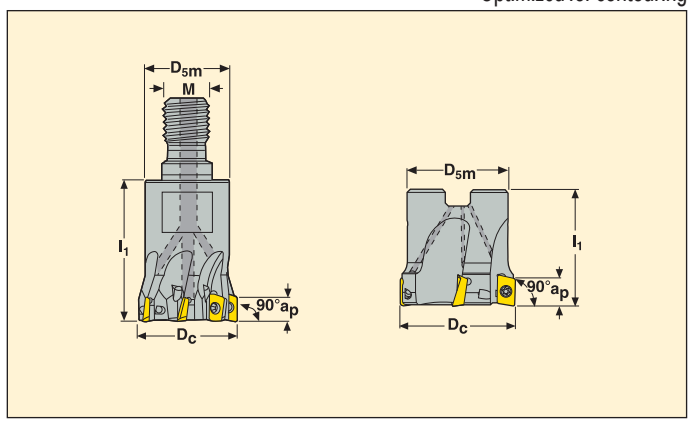

- For insert selection and cutting data recommendations, see page(s) 44 – 45
- For helical interpolation, see page(s) 682-683

Part No.	Type of mounting	Dimensions in mm						α° max		KG		Insert
		a_p	D_c	D_{5m}	dm_m	M	l_1					
R217.69 -1632.RE-18-3AN	Combimaster	17	32	30	–	M16	45	7,0	3	0,2	11100	XO.X18..
R217.69 -1640.RE-18-4AN	Combimaster	17	40	30	–	M16	45	4,5	4	0,3	9900	XO.X18..
-2040.RE-18-3AN	Combimaster	17	40	36,5	–	M20	45	4,5	3	0,4	9900	XO.X18..
R220.69 -0050-18-5AN	Arbor	17	50	47	22	–	40	3,0	5	0,3	8900	XO.X18..
-0063-18-6AN	Arbor	17	63	52	27	–	40	2,0	6	0,5	7900	XO.X18..
-0080-18-8AN	Arbor	17	80	62	27	–	50	1,5	8	1,0	7000	XO.X18..
-0100-18-9AN	Arbor	17	100	77	32	–	50	1,0	9	1,6	6300	XO.X18..
-0125-18-11AN	Arbor	17	125	90	40	–	63	1,0	11	3,0	5600	XO.X18..
-8160-18-12N	Arbor	17	160	90	40	–	63	0,5	12	4,6	5000	XO.X18..

Ramping angle = α° Spigot size = dm_m

For Combimaster shanks and dimensions, see pages 588-598

Spare Parts

For cutter	Insert screw	Insert key	Arbor screw
R217.69-..	C04510-T20P	T20P-3	–
R220.69-0050	C04510-T20P	T20P-3	220.17-692
R220.69-0063	C04510-T20P	T20P-3	220.17-693
R220.69-0080-0100	C04510-T20P	T20P-3	–
R220.69-0125-8160	C04510-T20P	T20P-3	–

Please check availability in current price and stock-list

Torque value 5,0 Nm, Torque keys, see page 690

Turbo 18 – R220.69-18C

Slotting and contouring

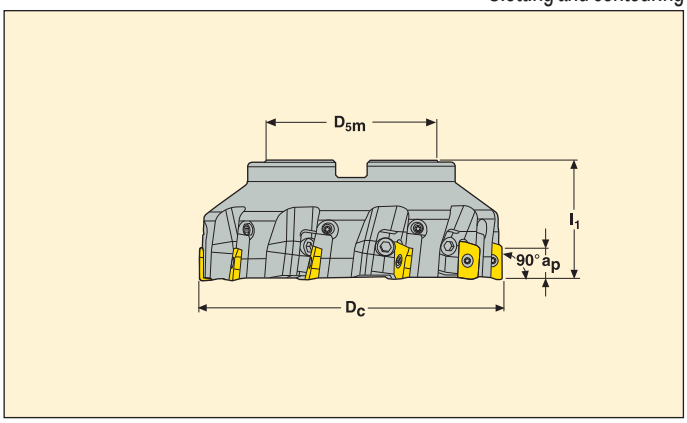

- For insert selection and cutting data recommendations, see page(s) 44 – 45
- For complete insert programme, see page(s) 642
- For helical interpolation, see page(s) 682-683

Part No.	Type of mounting	Dimensions in mm						KG		Insert
		a_p	D_c	D_{5m}	dm_m	l_1				
R220.69 -0125-18-8CN	Arbor	17	125	90	40	63	8	3,3	5600	XO.X18..
-8160-18-10CN	Arbor	17	160	90	40	63	10	5,2	5000	XO.X18..
-8200-18-12CN	Arbor	17	200	130	60	63	12	7,4	4400	XO.X18..
-8250-18-16CN	Arbor	17	250	130	60	63	16	14,7	3900	XO.X18..

Ramping angle = α°

Spare Parts

For cutter	Setting gauge	Insert screw	Insert key	Cassette screw	Cassette
R220.69-0125-8250	AU1114T-T15P	C04510-T20P	T20P-4	FS96018	XO18PRN

Please check availability in current price and stock-list
Torque value 5,0 Nm, Torque keys, see page 690

R217/220.69-18 – Insert selection

SMG		a_p	f_z		
			100%	30%	10%
P1	XOMX180608TR-ME13 F40M	8,0	0,18	0,20	0,30
P2	XOMX180608TR-ME13 F40M	8,0	0,19	0,20	0,32
P3	XOMX180608TR-M14 MP2500	8,0	0,19	0,20	0,32
P4	XOMX180608TR-M14 MP2500	8,0	0,19	0,20	0,32
P5	XOMX180608TR-M14 MP2500	8,0	0,18	0,20	0,30
P6	XOMX180608TR-M14 MP2500	8,0	0,18	0,20	0,30
P7	XOMX180608TR-M14 MP2500	8,0	0,18	0,20	0,30
P8	XOMX180608TR-MD15 MP1500	8,0	0,20	0,22	0,34
P11	XOMX180608TR-M14 T350M	8,0	0,18	0,20	0,30
M1	XOMX180608TR-M14 F40M	8,0	0,20	0,22	0,34
M2	XOMX180608TR-M14 F40M	8,0	0,18	0,20	0,30
M3	XOMX180608TR-M14 F40M	7,0	0,15	0,16	0,24
M4	XOMX180608R-M10 T350M	5,0	0,090	0,10	0,15
M5	XOMX180608R-M10 T350M	5,0	0,090	0,10	0,15
K1	XOMX180608TR-M14 MK2050	8,0	0,20	0,22	0,34
K2	XOMX180608TR-M14 MK2050	8,0	0,18	0,20	0,30
K3	XOMX180608TR-M14 MK2050	8,0	0,18	0,20	0,30
K4	XOMX180608TR-M14 MK2050	8,0	0,18	0,20	0,30
K5	XOMX180608TR-M14 MK2050	8,0	0,16	0,18	0,28
K6	XOMX180608TR-M14 MK2050	8,0	0,18	0,20	0,30
K7	XOMX180608TR-M14 MK2050	8,0	0,16	0,18	0,28
N1	XOEX180608FR-E10 H25	8,0	0,18	0,20	0,30
N2	XOEX180608FR-E10 H25	8,0	0,18	0,20	0,30
N3	XOEX180608FR-E10 H25	8,0	0,18	0,20	0,30
N11	XOEX180608FR-E10 H25	8,0	0,18	0,20	0,30
S1	XOMX180608R-M10 T350M	5,0	0,090	0,10	0,15
S2	XOMX180608R-M10 T350M	5,0	0,090	0,10	0,15
S3	XOMX180608R-M10 T350M	5,0	0,085	0,095	0,14
S11	XOMX180608R-M10 MS2050	6,0	0,10	0,11	0,18
S12	XOMX180608R-M10 MS2050	6,0	0,10	0,11	0,18
S13	XOMX180608R-M10 MS2050	5,0	0,090	0,10	0,15
H5	XOMX180608TR-MD15 MP1500	7,0	0,13	0,15	0,22
H8	XOMX180608TR-MD15 MP2500	6,0	0,10	0,11	0,17
H11	XOMX180608TR-MD15 MP1500	7,0	0,13	0,15	0,22
H12	XOMX180608TR-MD15 MP1500	7,0	0,13	0,15	0,22

SMG = Seco material group
f_z = mm/tooth
v_c= m/min
a_e/D_c = %
All cutting data are start values

R217/220.69-18 – Cutting data v_c = (m/min)

	MP1020			MP1500			MP2500			MP3000			T350M			F40M		
SMG	100%	30%	10%	100%	30%	10%	100%	30%	10%	100%	30%	10%	100%	30%	10%	100%	30%	10%
P1	340	415	450	285	385	460	280	375	445	240	320	385	245	325	390	215	285	335
P2	330	390	435	280	375	440	270	365	425	235	315	370	235	320	370	205	275	325
P3	285	350	390	245	330	385	235	320	375	205	275	325	205	275	325	180	240	285
P4	265	305	345	215	290	340	210	280	335	180	245	285	185	245	290	160	210	255
P5	255	305	330	210	280	330	200	270	320	175	235	280	175	235	280	155	205	245
P6	285	340	370	235	310	370	225	305	360	195	260	310	200	265	315	170	230	275
P7	270	320	350	220	295	350	215	290	340	185	245	295	185	250	295	160	220	255
P8	240	295	330	205	280	325	200	270	315	175	235	270	175	235	275	150	205	240
P11	260	315	340	215	285	340	210	280	330	180	240	285	180	245	285	160	210	250
M1	—	—	—	—	—	—	195	265	305	175	235	275	180	245	285	165	225	260
M2	—	—	—	—	—	—	165	215	260	145	195	230	150	200	240	140	185	220
M3	—	—	—	—	—	—	130	175	210	120	160	190	120	165	195	110	150	180
M4	—	—	—	—	—	—	105	140	160	90	125	145	95	130	150	85	120	135
M5	—	—	—	—	—	—	85	115	135	75	105	120	80	110	125	75	100	115
K1	—	—	—	220	295	350	215	290	335	185	250	295	185	250	295	160	220	255
K2	—	—	—	200	265	315	190	255	305	165	220	265	165	220	265	145	195	230
K3	—	—	—	170	225	265	160	215	255	140	185	225	140	185	225	125	165	195
K4	—	—	—	160	215	255	155	205	245	135	180	215	135	180	215	115	155	185
K5	—	—	—	100	130	155	95	125	150	85	110	130	85	110	130	75	95	115
K6	—	—	—	140	190	225	135	180	215	120	155	190	120	160	190	105	135	165
K7	—	—	—	125	170	195	125	160	190	105	140	165	105	140	165	95	120	145
N1	—	—	—	—	—	—	780	1050	1250	670	910	1075	—	—	—	590	800	940
N2	—	—	—	—	—	—	630	850	1000	540	730	870	—	—	—	480	640	760
N3	—	—	—	—	—	—	420	570	670	365	490	580	—	—	—	320	430	510
N11	—	—	—	—	—	—	480	650	770	415	560	670	—	—	—	365	490	580
S1	—	—	—	—	—	—	50	70	80	43	60	70	45	60	70	41	55	65
S2	—	—	—	—	—	—	40	55	65	35	47	55	36	49	55	33	44	50
S3	—	—	—	—	—	—	36	48	55	31	41	48	32	43	50	29	39	46
S11	—	—	—	—	—	—	70	95	110	60	80	95	60	85	100	55	75	90
S12	—	—	—	—	—	—	40	55	65	34	47	55	36	48	55	32	44	50
S13	—	—	—	—	—	—	32	44	50	28	38	44	29	39	45	26	35	41
H5	—	—	—	47	60	75	41	55	65	37	49	60	39	50	60	34	45	55
H8	—	—	—	50	70	80	44	60	70	40	55	60	42	55	65	37	49	55
H11	—	—	—	60	80	95	50	70	85	48	60	75	50	65	80	44	60	70
H12	—	—	—	100	130	155	85	115	135	75	100	120	80	110	130	70	95	110
H21	—	—	—	50	70	80	44	60	70	40	55	60	42	55	65	37	49	55

R217/220.69-18 – Cutting data v_c = (m/min)

	MK1500			MK2050			MM4500			MS2050			H25		
SMG	100%	30%	10%	100%	30%	10%	100%	30%	10%	100%	30%	10%	100%	30%	10%
P1	—	—	—	250	335	400	175	230	275	265	325	365	—	—	—
P2	—	—	—	245	325	385	165	225	260	260	315	355	—	—	—
P3	—	—	—	215	290	335	145	195	230	225	275	305	—	—	—
P4	—	—	—	190	255	295	130	170	205	200	240	265	—	—	—
P5	—	—	—	185	245	290	125	165	195	190	230	255	—	—	—
P6	—	—	—	205	270	325	140	190	220	215	260	285	—	—	—
P7	—	—	—	195	255	305	130	175	210	200	245	270	—	—	—
P8	—	—	—	180	245	285	120	165	195	190	230	255	—	—	—
P11	—	—	—	190	250	295	130	170	200	195	235	260	—	—	—
M1	—	—	—	—	—	—	140	190	225	225	275	310	—	—	—
M2	—	—	—	—	—	—	120	160	190	185	225	250	—	—	—
M3	—	—	—	—	—	—	95	130	155	140	165	180	—	—	—
M4	—	—	—	—	—	—	75	100	120	105	120	125	—	—	—
M5	—	—	—	—	—	—	65	85	100	85	100	105	—	—	—
K1	280	370	440	265	350	415	—	—	—	260	320	355	—	—	—
K2	250	330	395	235	315	375	—	—	—	230	280	310	—	—	—
K3	210	280	335	200	265	315	—	—	—	195	235	260	—	—	—
K4	200	265	320	190	255	300	—	—	—	185	225	250	—	—	—
K5	125	165	195	120	155	185	—	—	—	110	135	145	—	—	—
K6	175	235	280	170	225	265	—	—	—	165	200	220	—	—	—
K7	160	210	250	150	200	235	—	—	—	140	170	185	—	—	—
N1	—	—	—	—	—	—	—	—	—	—	—	—	640	840	1000
N2	—	—	—	—	—	—	—	—	—	—	—	—	510	680	810
N3	—	—	—	—	—	—	—	—	—	—	—	—	340	455	540
N11	—	—	—	—	—	—	—	—	—	—	—	—	390	520	620
S1	—	—	—	—	—	—	23	31	36	44	55	65	—	—	—
S2	—	—	—	—	—	—	19	25	29	35	46	55	—	—	—
S3	—	—	—	—	—	—	16	22	26	31	41	47	—	—	—
S11	—	—	—	—	—	—	32	43	50	60	80	90	—	—	—
S12	—	—	—	—	—	—	24	33	39	45	60	70	—	—	—
S13	—	—	—	—	—	—	20	27	31	38	50	55	—	—	—
H5	—	—	—	—	—	—	—	—	—	—	—	—	—	—	—
H8	—	—	—	—	—	—	—	—	—	—	—	—	—	—	—
H11	—	—	—	—	—	—	—	—	—	—	—	—	—	—	—
H12	—	—	—	—	—	—	—	—	—	—	—	—	—	—	—

R220.90-26 ABEX

Slotting and contouring

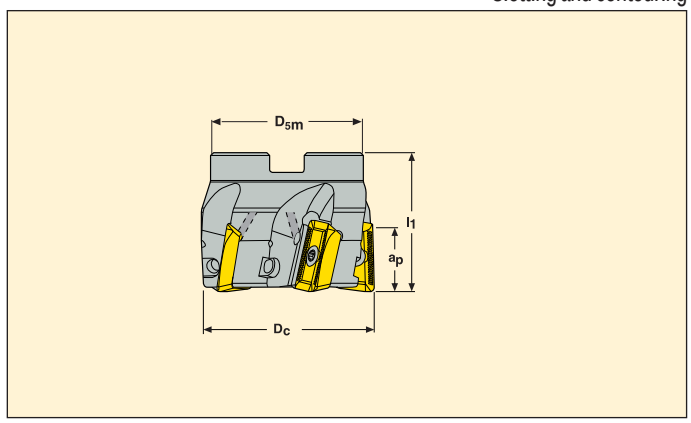

- For insert selection and cutting data recommendations, see page(s) 49
- For complete insert programme, see page(s) 600
- For helical interpolation, see page(s) 682-683

Part No.	Type of mounting	Dimensions in mm a_p	D_c	D_{5m}	dm_m	l_1	α° max		KG		Insert
R220.90 -0063-26-4AM	Arbor	20	63	55	27	50	1,5	4	0,7	6700	ABEX26..
-0063-26-5AM	Arbor	20	63	55	27	50	1,5	5	0,7	6700	ABEX26..
R220.90 -0080-26-5AM	Arbor	20	80	62	27	50	1,0	5	1,9	5900	ABEX26..
R220.90 -0100-26-6AM	Arbor	20	100	77	32	50	1,0	6	1,7	5300	ABEX26..
R220.90 -0125-26-7AM	Arbor	20	125	90	40	63	0,5	7	1,9	4700	ABEX26..
R220.90 -8160-26-10AM	Arbor	20	160	90	40	63	0,5	10	1,9	4200	ABEX26..

Ramping angle = α°

Spare Parts

For cutter	Lid	Insert screw	Insert key	Arbor screw
	–		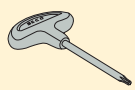	
R220.90-0063-0080	–	C05013-T20P	T20P-4	MC6S12X35
R220.90-0100-0125	–	C05013-T20P	T20P-4	–
R220.90-8160	SC160-53	C05013-T20P	T20P-4	MF6S4X10

Please check availability in current price and stock-list

Torque value 5,0 Nm, Torque keys, see page 690

R220.90-26 ABEX

Optimized for contouring

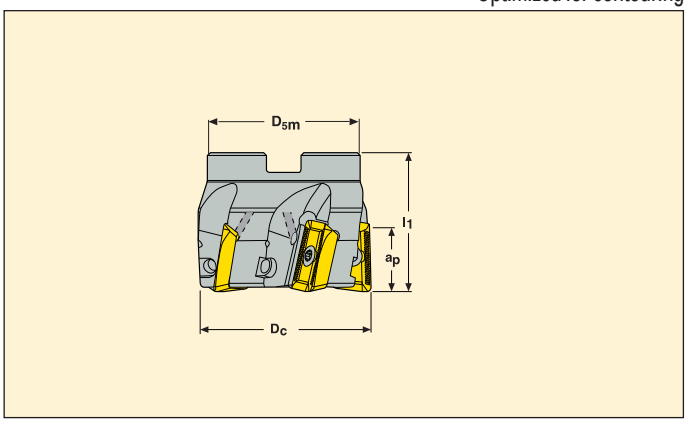

- For insert selection and cutting data recommendations, see page(s) 49
- For complete insert programme, see page(s) 600
- For helical interpolation, see page(s) 682-683

Part No.	Type of mounting	Dimensions in mm a_p	D_c	D_{5m}	dm_m	l_1	α° max		KG		Insert
R220.90 -0063-26-6AM	Arbor	20	63	55	27	50	1,5	6	1,9	6700	ABEX26..
-0080-26-7AM	Arbor	20	80	62	27	50	1,0	7	1,9	5900	ABEX26..
-0100-26-8AM	Arbor	20	100	77	32	50	1,0	8	1,8	5300	ABEX26..

Ramping angle = α°

Spare Parts

For cutter	Insert screw	Insert key	Arbor screw
R220.90-0063-0080	C05013-T20P	T20P-4	MC6S12X35
R220.90-0100-0125	C05013-T20P	T20P-4	–

Please check availability in current price and stock-list
Torque value 5,0 Nm, Torque keys, see page 690

R220.90 ABEX

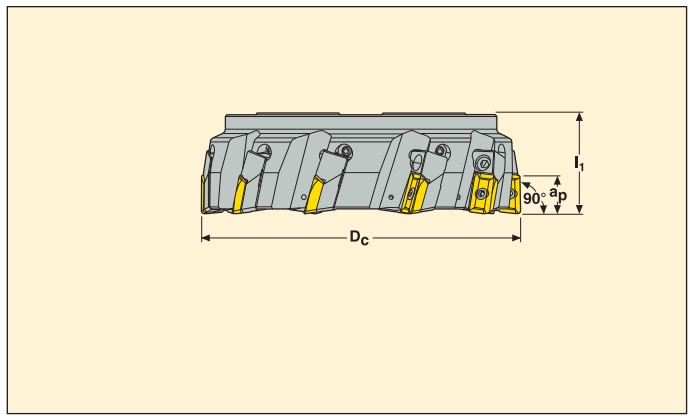

- For insert selection and cutting data recommendations, see page(s) 49
- For complete insert programme, see page(s) 600
- For helical interpolation, see page(s) 682-683

Part No.	Type of mounting	Dimensions in mm a_p	D_c	D_{5m}	dm_m	l_1	α° max		KG		Insert
R220.90 -8160-26-8CAN	Arbor	20	160	90	40	63	0,5	8	5,9	4200	ABEX26..
-8200-26-10CAN	Arbor	20	200	130	60	63	0,35	10	8,6	3800	ABEX26..
-8250-26-12CAN	Arbor	20	250	130	60	63	0,3	12	15,0	3400	ABEX26..
-8315-26-14CAN	Arbor	20	315	225	60	80,0	0,3	14	30,4	3000	ABEX26..

Ramping angle = ά Spigot size = dm_m

Spare Parts

For cutter	Setting key	Setting gauge	Insert screw	Insert key	Cassette screw	Cassette
R220.90-..	T20P-4	AU1114T-T15P	C04510-T20P	–	FS96018	–
R220.90-..	–	AU1114T-T15P	C04510-T20P	T20P-4	FS96018	XO18PRN

Please check availability in current price and stock-list
Torque value 5,0 Nm, Torque keys, see page 690

R220.90-26 ABEX – Insert selection

SMG		a_p	f_z 100%	f_z 30%	f_z 10%
P1	ABEX2606ZFFR-M15 F40M	10,0	0,22	0,24	0,36
P2	ABEX2606ZFFR-M15 F40M	10,0	0,22	0,24	0,36
P3	ABEX2606ZFFR-M15 MP2500	10,0	0,20	0,22	0,34
P4	ABEX2606ZFFR-M15 MP2500	10,0	0,20	0,22	0,34
P5	ABEX2606ZFFR-M15 MP2500	10,0	0,20	0,22	0,34
P6	ABEX2606ZFFR-M15 MP2500	10,0	0,20	0,22	0,32
P7	ABEX2606ZFFR-M15 MP2500	10,0	0,20	0,22	0,32
P8	ABEX2606ZFFR-M15 MP2500	10,0	0,20	0,22	0,34
P11	ABEX2606ZFFR-M15 T350M	10,0	0,20	0,22	0,32
M1	ABEX2606ZFFR-M15 F40M	10,0	0,22	0,24	0,36
M2	ABEX2606ZFFR-M15 F40M	10,0	0,20	0,22	0,34
M3	ABEX2606ZFFR-M15 F40M	8,0	0,16	0,17	0,26
M4	ABEX2606ZFFR-M15 T350M	6,0	0,14	0,15	0,24
M5	ABEX2606ZFFR-M15 MM4500	6,0	0,14	0,15	0,24
K1	ABEX2606ZFFR-M15 MK1500	10,0	0,22	0,24	0,36
K2	ABEX2606ZFFR-M15 MK1500	10,0	0,20	0,22	0,34
K3	ABEX2606ZFFR-M15 MK1500	10,0	0,20	0,22	0,34
K4	ABEX2606ZFFR-M15 MK1500	10,0	0,20	0,22	0,34
K5	ABEX2606ZFFR-M15 T350M	10,0	0,18	0,19	0,30
K6	ABEX2606ZFFR-M15 T350M	10,0	0,20	0,22	0,34
K7	ABEX2606ZFFR-M15 T350M	10,0	0,18	0,19	0,30

SMG = Seco material group
f_z = mm/tooth
v_c= m/min
a_e/D_c = %
All cutting data are start values

R220.90-26 ABEX – Cutting data v_c = (m/min)

	MP1500			MP2500			T350M			F40M			MK1500			MM4500		
SMG	100%	30%	10%	100%	30%	10%	100%	30%	10%	100%	30%	10%	100%	30%	10%	100%	30%	10%
P1	280	370	440	245	330	390	215	285	340	185	250	295	—	—	—	150	200	240
P2	270	360	430	240	320	380	210	280	330	180	240	285	—	—	—	150	195	235
P3	240	320	375	215	285	330	185	245	290	160	215	250	—	—	—	130	175	205
P4	210	280	330	190	250	290	165	215	255	145	190	220	—	—	—	115	155	180
P5	205	270	320	180	240	285	155	205	250	135	180	215	—	—	—	110	145	175
P6	230	300	360	200	265	320	175	230	280	155	200	240	—	—	—	125	165	195
P7	215	285	340	190	250	300	165	220	260	145	190	230	—	—	—	115	155	185
P8	205	270	315	180	240	280	155	205	245	135	180	210	—	—	—	110	145	170
P11	210	275	330	185	245	295	160	215	255	140	185	220	—	—	—	115	150	180
M1	—	—	—	175	230	275	160	215	255	145	195	230	—	—	—	125	170	200
M2	—	—	—	145	190	230	135	180	215	120	160	195	—	—	—	105	140	165
M3	—	—	—	120	160	185	110	150	175	100	135	155	—	—	—	85	115	135
M4	—	—	—	95	125	145	90	115	135	80	105	125	—	—	—	70	90	105
M5	—	—	—	80	105	120	75	95	115	65	90	105	—	—	—	60	75	90
K1	215	285	340	190	255	300	—	—	—	145	190	225	270	360	425	—	—	—
K2	190	255	305	170	225	270	—	—	—	130	170	205	240	320	380	—	—	—
K3	165	215	260	145	190	230	—	—	—	110	145	175	205	270	325	—	—	—
K4	155	205	245	140	180	220	—	—	—	105	140	165	195	260	310	—	—	—
K5	95	130	150	85	115	130	—	—	—	65	85	100	120	160	185	—	—	—
K6	135	180	215	120	160	190	—	—	—	90	120	145	170	225	270	—	—	—
K7	120	165	190	110	145	170	—	—	—	80	110	130	155	205	240	—	—	—

Square T4 – R217.94-08

Slotting and contouring

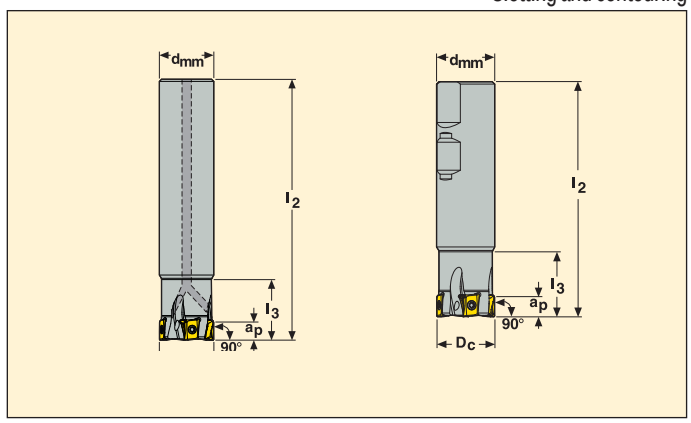

- For insert selection and cutting data recommendations, see page(s) 54–54
- For complete insert programme, see page(s) 607

Part No.	Type of mounting	Dimensions in mm a_p	D_c	dm_m	l_2	l_3		KG		Insert
R217.94 -1616.0-08-2A	Cylindrical	8	16	16	90,0	29,0	2	0,2	20600	LOEX08..
-1616.3-08-2A	Cyl.-Weldon	8	16	16	78,0	23,4	2	0,1	20600	LOEX08..
R217.94 -2018.3-08-2A	Cyl.-Weldon	8	18	20	90,0	26,7	2	0,2	19400	LOEX08..
R217.94 -1820.0-08-2A	Cylindrical	8	20	18	160,0	29,0	2	0,3	18400	LOEX08..
-2020.0-08-2A	Cylindrical	8	20	20	160,0	29,0	2	0,4	18400	LOEX08..
-2020.3-08-2A	Cyl.-Weldon	8	20	20	90,0	28,8	2	0,2	18400	LOEX08..
R217.94 -2522.3-08-3A	Cyl.-Weldon	8	22	25	101,0	26,5	3	0,3	17600	LOEX08..
R217.94 -2225.0-08-3A	Cylindrical	8	25	22	180,0	29,0	3	0,5	17600	LOEX08..
-2525.0-08-3A	Cylindrical	8	25	25	180,0	29,0	3	0,7	16500	LOEX08..
-2525.3-08-3A	Cyl.-Weldon	8	25	25	101,0	28,9	3	0,4	16500	LOEX08..
R217.94 -3232.0-08-3A	Cylindrical	8	32	32	200,0	29,0	3	1,2	14600	LOEX08..
-3232.3-08-3A	Cyl.-Weldon	8	32	32	105,0	28,2	3	0,6	14600	LOEX08..

Spare Parts

For cutter	Insert screw	Insert key
R217.94-.. Dia 16-18	C02707-T08P	T08P-3
R217.94-.. Dia 20-32	C02708-T08P	T08P-3

Please check availability in current price and stock-list
Torque value 1,2 Nm, Torque keys, see page 690

Square T4 – R217.94-08

Optimized for contouring

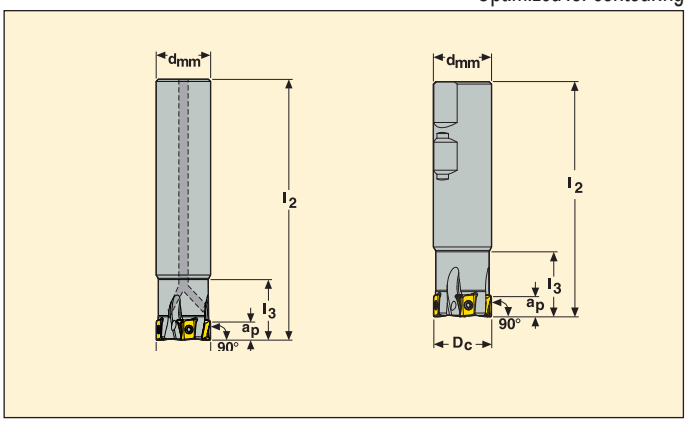

- For insert selection and cutting data recommendations, see page(s) 54–54
- For complete insert programme, see page(s) 607

Part No.	Type of mounting	Dimensions in mm a_p	D_c	dm_m	l_2	l_3		KG		Insert
R217.94 -2020.0-08-3A	Cylindrical	8	20	20	110,0	29,0	3	0,3	18400	LOEX08..
-2020.3-08-3A	Cyl.-Weldon	8	20	20	90,0	28,9	3	0,2	18400	LOEX08..
R217.94 -2525.0-08-4A	Cylindrical	8	25	25	120,0	29,0	4	0,4	16500	LOEX08..
-2525.3-08-4A	Cyl.-Weldon	8	25	25	101,0	28,9	4	0,4	16500	LOEX08..
R217.94 -3032.0-08-4A	Cylindrical	8	32	30	200,0	29,0	4	1,0	14600	LOEX08..
-3232.0-08-5A	Cylindrical	8	32	32	130,0	29,0	5	0,8	14600	LOEX08..
-3232.3-08-5A	Cyl.-Weldon	8	32	32	105,0	28,2	5	0,6	14600	LOEX08..

Spare Parts

For cutter	Insert screw	Insert key
R217.94-08	C02708-T08P	T08P-3

Please check availability in current price and stock-list
Torque value 1,2 Nm, Torque keys, see page 690

Square T4 – R217/220.94-08

Slotting and contouring

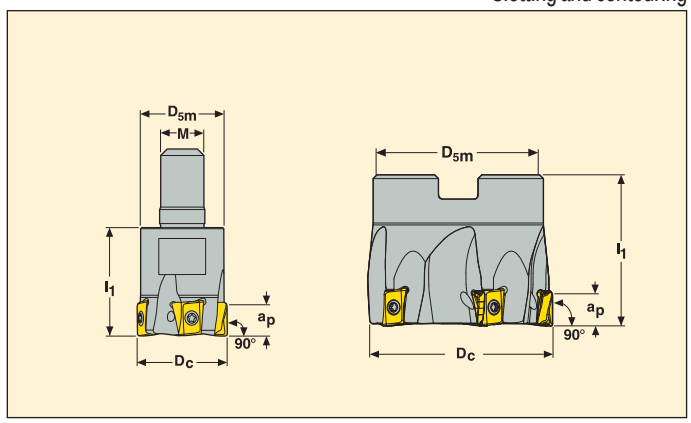

- For insert selection and cutting data recommendations, see page(s) 54–54
- For complete insert programme, see page(s) 607

Part No.	Type of mounting	Dimensions in mm a_p	D_c	D_{5m}	dm_m	M	l_1		KG		Insert
R217.94 -0816.RE-08-2A	Combimaster	3,5	16	13,5	–	M16	23,0	2	0,1	20600	LOEX08..
R217.94 -1020.RE-08-2A	Combimaster	3,5	20	18,5	–	M20	28,0	2	0,1	18400	LOEX08..
R217.94 -1225.RE-08-3A	Combimaster	8	25	23,0	–	M12	30,0	3	0,1	16500	LOEX08..
R217.94 -1632.RE-08-3A	Combimaster	8	32	30,0	–	M16	35,0	3	0,2	14600	LOEX08..
R220.94 -0032-08-3A	Arbor	8	32	29,3	16	–	35,0	3	0,2	13000	LOEX08..
R217.94 -2040.RE-08-4A	Combimaster	8	40	36	–	M20	40	4	0,4	14600	LOEX08..
R220.94 -0040-08-4A	Arbor	8	40	35	16	–	40	4	0,3	16400	LOEX08..
R220.94 -0050-08-5A	Arbor	8	50	47	22	–	40	5	0,4	11700	LOEX08..
R220.94 -0063-08-6A	Arbor	8	63	62	27	–	40	6	0,6	13200	LOEX08..

Spigot size = dm_m

For Combimaster shanks and dimensions, see pages 588-598

Spare Parts

For cutter	Insert screw	Insert key	Arbor screw
R217.94-.. Ø16	C02707-T08P	T08P-3	–
R217.94-.. Ø20-40	C02708-T08P	T08P-3	–
R220.94-0032-0040	C02708-T08P	T08P-2	TCEI0825
R220.94-0050	C02708-T08P	T08P-2	220.17-692
R220.94-0063	C02708-T08P	T08P-2	MLC6S12X30

Please check availability in current price and stock-list
Torque value 1,2 Nm, Torque keys, see page 690

Square T4 – R217/220.94-08

Optimized for contouring

- For insert selection and cutting data recommendations, see page(s) 54–54
- For complete insert programme, see page(s) 607

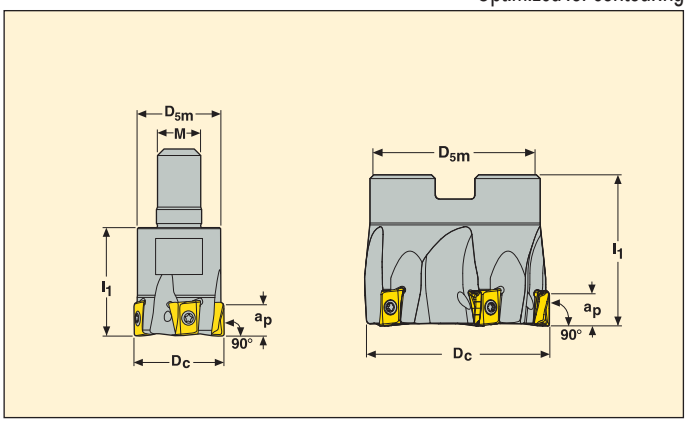

Part No.	Type of mounting	Dimensions in mm a_p	D_c	D_{5m}	dm_m	M	l_1		KG		Insert
R217.94 -1020.RE-08-3A	Combimaster	3,5	20	18,5	–	M20	28,0	3	0,1	18400	LOEX08..
R217.94 -1225.RE-08-4A	Combimaster	8	25	23,0	–	M12	30,0	4	0,1	16500	LOEX08..
R217.94 -1632.RE-08-5A	Combimaster	8	32	30,0	–	M16	35,0	5	0,2	14600	LOEX08..
R220.94 -0032-08-5A	Arbor	8	32	29,3	16	–	35,0	5	0,2	13000	LOEX08..
R217.94 -2040.RE-08-6A	Combimaster	8	40	36	–	M20	40	6	0,4	14600	LOEX08..
R220.94 -0040-08-6A	Arbor	8	40	35	16	–	40	6	0,3	16400	LOEX08..
R220.94 -0050-08-7A	Arbor	8	50	47	22	–	40	7	0,4	11700	LOEX08..
R220.94 -0063-08-9A	Arbor	8	63	62	27	–	40	9	0,6	13200	LOEX08..

Spigot size = dm_m

For Combimaster shanks and dimensions, see pages 588-598

Spare Parts

For cutter	Insert screw	Insert key	Arbor screw
R217.94-..	C02708-T08P	T08P-3	–
R220.94-0032-0040	C02708-T08P	T08P-2	TCEI0825
R220.94-0050	C02708-T08P	T08P-2	220.17-692
R220.94-0063	C02708-T08P	T08P-3	MLC6S12X30

Please check availability in current price and stock-list
Torque value 1,2 Nm, Torque keys, see page 690

R217/220.94-08 – Insert selection

SMG		a_p	f_z 100%	f_z 30%	f_z 10%
P1	LOEX080408TR-M08 F40M	4,0	0,11	0,13	0,19
P2	LOEX080408TR-M08 F40M	4,0	0,12	0,13	0,20
P3	LOEX080408TR-M08 MP2500	4,0	0,11	0,12	0,19
P4	LOEX080408TR-M08 MP2500	4,0	0,11	0,12	0,18
P5	LOEX080408TR-M08 MP2500	4,0	0,11	0,12	0,18
P6	LOEX080408TR-M08 MP2500	4,0	0,10	0,11	0,18
P7	LOEX080408TR-M08 MP2500	4,0	0,10	0,11	0,18
P8	LOEX080408TR-M08 MP2500	4,0	0,11	0,12	0,19
P11	LOEX080408TR-M08 MP3000	4,0	0,10	0,11	0,18
M1	LOEX080408TR-M08 F40M	4,0	0,12	0,13	0,20
M2	LOEX080408TR-M08 F40M	4,0	0,11	0,12	0,18
M3	LOEX080408TR-M08 F40M	3,5	0,085	0,095	0,14
K1	LOEX080408TR-MD08 MK2050	4,0	0,12	0,13	0,20
K2	LOEX080408TR-MD08 MK2050	4,0	0,11	0,12	0,18
K3	LOEX080408TR-MD08 MK2050	4,0	0,11	0,12	0,18
K4	LOEX080408TR-MD08 MK2050	4,0	0,11	0,12	0,18
K5	LOEX080408TR-MD08 MK2050	4,0	0,095	0,10	0,16
K6	LOEX080408TR-MD08 MK2050	4,0	0,11	0,12	0,18
K7	LOEX080408TR-MD08 MK2050	4,0	0,095	0,10	0,16
S1	LOEX080408TR-M08 F40M	2,5	0,075	0,085	0,13
S2	LOEX080408TR-M08 F40M	2,5	0,075	0,085	0,13
S3	LOEX080408TR-M08 F40M	2,5	0,070	0,075	0,12
S11	LOEX080408TR-M08 MS2050	3,0	0,085	0,095	0,14
S12	LOEX080408TR-M08 MS2050	3,0	0,085	0,095	0,14
S13	LOEX080408TR-M08 MS2050	2,5	0,075	0,085	0,13

SMG = Seco material group
f_z = mm/tooth
v_c= m/min
a_e/D_c = %
All cutting data are start values

R217/220.94-08 – Cutting data v_c = (m/min)

SMG	MK1500			MK2050			MM4500			MS2050		
	100%	30%	10%	100%	30%	10%	100%	30%	10%	100%	30%	10%
P1	—	—	—	305	400	465	195	260	300	—	—	—
P2	—	—	—	290	380	455	190	245	295	—	—	—
P3	—	—	—	255	335	395	165	215	255	—	—	—
P4	—	—	—	225	295	350	145	190	225	—	—	—
P5	—	—	—	215	280	335	140	180	215	—	—	—
P6	—	—	—	245	325	380	160	210	245	210	245	265
P7	—	—	—	235	305	360	150	195	230	200	230	250
P8	—	—	—	215	280	335	140	180	215	190	225	240
P11	—	—	—	225	295	350	145	190	225	190	225	245
M1	—	—	—	—	—	—	160	210	250	230	275	295
M2	—	—	—	—	—	—	135	175	205	185	220	235
M3	—	—	—	—	—	—	110	140	165	130	150	160
K1	345	450	540	315	410	490	—	—	—	—	—	—
K2	305	400	470	280	365	430	—	—	—	—	—	—
K3	255	335	400	235	310	365	—	—	—	—	—	—
K4	245	320	380	225	295	350	—	—	—	—	—	—
K5	150	200	235	140	185	215	—	—	—	—	—	—
K6	215	285	335	200	260	305	—	—	—	—	—	—
K7	195	255	300	180	235	275	—	—	—	—	—	—
S1	—	—	—	—	—	—	26	34	40	—	—	—
S2	—	—	—	—	—	—	21	27	32	—	—	—
S3	—	—	—	—	—	—	18	24	28	—	—	—
S11	—	—	—	—	—	—	36	47	55	70	85	100
S12	—	—	—	—	—	—	28	36	43	55	65	75

R217/220.94-08 – Cutting data v_c = (m/min)

	MP1500			MP2500			MP3000			T350M			F40M		
SMG	100%	30%	10%	100%	30%	10%	100%	30%	10%	100%	30%	10%	100%	30%	10%
P1	355	470	550	315	415	485	300	390	460	275	360	420	235	310	365
P2	340	445	530	300	395	470	285	375	445	260	345	410	230	295	355
P3	300	390	465	265	345	410	250	330	390	230	300	360	195	260	310
P4	260	345	410	230	305	360	220	290	345	200	265	315	175	230	270
P5	250	330	390	220	290	345	210	275	330	195	255	300	170	225	260
P6	290	380	445	255	335	395	240	315	375	220	290	345	190	250	295
P7	270	355	420	240	315	370	230	300	350	210	275	325	180	235	280
P8	250	330	390	220	290	345	210	275	330	195	255	300	165	220	260
P11	265	345	410	235	305	360	220	290	340	205	270	315	175	230	270
M1	—	—	—	215	285	340	210	280	335	200	265	315	185	240	285
M2	—	—	—	180	235	280	175	230	275	165	220	260	155	200	235
M3	—	—	—	145	190	225	145	185	220	135	180	210	120	160	190
K1	270	355	420	235	315	375	225	295	355	—	—	—	180	235	280
K2	240	315	370	210	275	330	200	260	310	—	—	—	160	210	245
K3	200	265	315	180	235	280	170	220	265	—	—	—	135	180	210
K4	190	255	300	170	225	265	160	210	250	—	—	—	130	170	200
K5	120	155	185	105	140	165	100	130	155	—	—	—	80	105	120
K6	170	225	265	150	195	235	140	185	220	—	—	—	115	150	175
K7	150	200	235	135	180	210	125	170	195	—	—	—	100	135	155
S1	—	—	—	—	—	—	50	70	80	50	65	75	44	60	70
S2	—	—	—	—	—	—	42	55	65	40	55	60	36	47	55
S3	—	—	—	—	—	—	37	48	55	35	46	55	31	41	49
S11	—	—	—	—	—	—	75	95	110	70	90	105	60	80	95
S12	—	—	—	—	—	—	42	55	65	40	50	60	36	47	55

Square T4 – R217.94-12

Slotting and contouring

- For insert selection and cutting data recommendations, see page(s) 60-61
- For complete insert programme, see page(s) 607

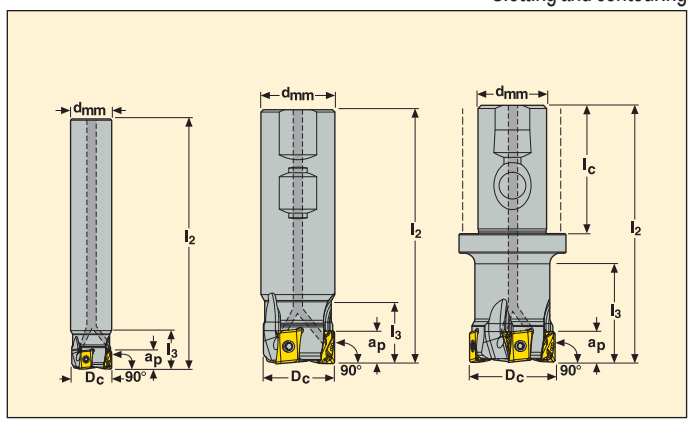

Part No.	Type of mounting	Dimensions in mm a_p	D_c	dm_m	l_2	l_3		KG		Insert
R217.94 -3232.0-12-3A	Cylindrical	12	32	32	195	135	3	1,2	11100	LOEX12
-3232.3-12-3A	Cyl/Weldon	12	32	32	110	30	3	0,7	12400	LOEX12
-2532.3S-12-3A	Seco/Weldon	12	32	25	110	30	3	0,7	12400	LOEX12
R217.94 -3240.0-12-4A	Cylindrical	12	40	32	210	150	4	1,4	9900	LOEX12
-3240.3S-12-4A	Seco/Weldon	12	40	32	120	30	4	1,3	11100	LOEX12

Spare Parts

For cutter	Insert screw	Insert key
R217.94-..	C04012-T15P	T15P-3

Please check availability in current price and stock-list
Torque value 3,0 Nm, Torque keys, see page 690

Square T4 – R217.94-12

Optimimized for contouring

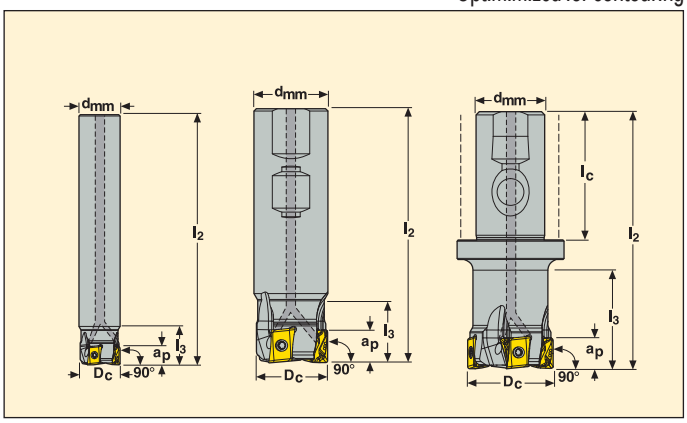

- For insert selection and cutting data recommendations, see page(s) 60-61
- For complete insert programme, see page(s) 607

Part No.	Type of mounting	Dimensions in mm a_p	D_c	dm_m	l_2	l_3		KG		Insert
R217.94 -2525.0-12-2A	Cylindrical	12	25	25	170	114	2	0,5	16500	LOEX12
-2525.3-12-2A	Cyl/Weldon	12	25	25	101	30	2	0,4	14000	LOEX12
R217.94 -3240.0-12-5A	Cylindrical	12	40	32	210	150	5	1,4	9900	LOEX12
-3240.3S-12-5A	Seco/Weldon	12	40	32	120	30	5	1,3	11100	LOEX12

Spare Parts

For cutter	Insert screw	Insert key
R217.94-2525	C040105-T15P	T15P-3
R217.94-3240	C04012-T15P	T15P-3

Please check availability in current price and stock-list
Torque value 3,0 Nm, Torque keys, see page 690

Square T4 – R217/220.94-12

Slotting and contouring

- For insert selection and cutting data recommendations, see page(s) 60-61
- For complete insert programme, see page(s) 607

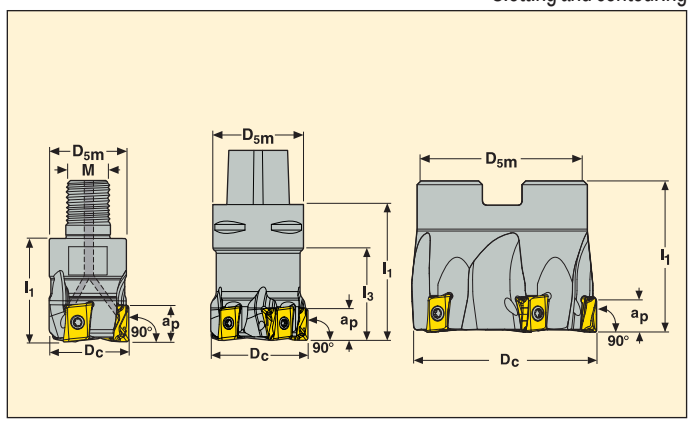

Part No.	Type of mounting	Dimensions in mm a_p	D_c	D_{5m}	dm_m	M	l_1	l_3		KG		Insert
R217.94 -1632.RE-12-3A	Combimaster	12	32	32	32	M16	40	30	3	0,3	11100	LOEX12
R217.94 -2040.RE-12-3A	Combimaster	12	40	36	32	M20	40	30	3	0,4	9900	LOEX12
R220.94 -0040-12-4A	Arbor	12	40	35	16	–	40	–	4	0,3	11800	LOEX12
C4-R217.94 -044-12-4A	Seco-Capto	12	44	40	–	–	60	60	4	0,6	11300	LOEX12
R220.94 -0050-12-5A	Arbor	12	50	47	22	–	40	–	5	0,5	10600	LOEX12
C5-R217.94 -054-12-5A	Seco-Capto	12	54	50	–	–	60	60	5	1,0	10200	LOEX12
R220.94 -0063-12-6A	Arbor	12	63	62	27	–	40	–	6	0,7	9400	LOEX12
C6-R217.94 -066-12-6A	Seco-Capto	12	66	63	–	–	60	60	6	1,6	8600	LOEX12
R220.94 -0080-12-7A	Arbor	12	80	62	27	–	50	–	7	1,3	8400	LOEX12
C6-R217.94 -080-12-9A	Seco-Capto	12	80	63	–	–	60	60	9	1,9	7800	LOEX12
R220.94 -0100-12-9A	Arbor	12	100	72	32	–	50	–	9	1,8	7500	LOEX12
R220.94 -0125-12-12A	Arbor	12	125	90	40	–	63	–	12	3,3	6700	LOEX12

Spigot size = dm_m

For Combimaster shanks and dimensions, see pages 588-598

Spare Parts

For cutter	Insert screw	Insert key	Arbor screw
R217.94-..	C04012-T15P	T15P-3	–
R220.94-0040	C04012-T15P	T15P-3	TCEI0825
C.-R217.94-..	C04012-T15P	T15P-3	–
R220.94-0050	C04012-T15P	T15P-3	220.17-692
R220.94-0063	C04012-T15P	T15P-3	MLC6S12X30
R220.94-0080	C04012-T15P	T15P-3	MC6S12X35
R220.94-0100-0125	C04012-T15P	T15P-3	–

Please check availability in current price and stock-list

Torque value 3,0 Nm, Torque keys, see page 690

Square T4 – R217/220.94-12

Optimized for contouring

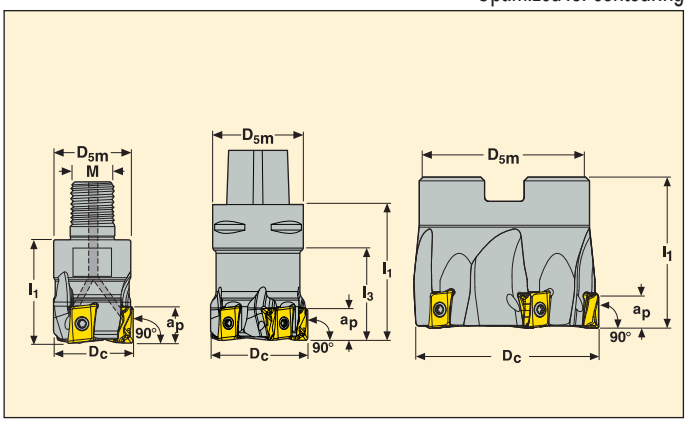

- For insert selection and cutting data recommendations, see page(s) 60-61
- For complete insert programme, see page(s) 607

Part No.	Type of mounting	Dimensions in mm								KG		Insert
		a_p	D_c	D_{5m}	dm_m	M	l_1	l_3				
R217.94 -2040.RE-12-5A	Combimaster	12	40	36	32	M20	40	30	5	0,5	9900	LOEX12
R220.94 -0040-12-5A	Arbor	12	40	35	16	–	40	–	5	0,4	11800	LOEX12
C4-R217.94 -044-12-5A	Seco-Capto	12	44	40	–	–	60	60	5	0,7	11300	LOEX12
R220.94 -0050-12-6A	Arbor	12	50	47	22	–	40	–	6	0,5	10600	LOEX12
C5-R217.94 -054-12-6A	Seco-Capto	12	54	50	–	–	60	60	6	1,0	10200	LOEX12
R220.94 -0063-12-8A	Arbor	12	63	62	27	–	40	–	8	0,7	9400	LOEX12
R220.94 -0080-12-10A	Arbor	12	80	62	27	–	50	–	10	1,3	8400	LOEX12
R220.94 -0100-12-12A	Arbor	12	100	72	32	–	50	–	12	1,9	7500	LOEX12
R220.94 -0125-12-15A	Arbor	12	125	90	40	–	63	–	15	3,4	6700	LOEX12

Spigot size = dm_m

For Combimaster shanks and dimensions, see pages 588-598

Spare Parts

For cutter	Insert screw	Insert key	Arbor screw
R217.94-..	C04012-T15P	T15P-3	–
R220.94-0040	C04012-T15P	T15P-3	TCEI0825
C.-R217.94-..	C04012-T15P	T15P-3	–
R220.94-0050	C04012-T15P	T15P-3	220.17-692
R220.94-0063	C04012-T15P	T15P-3	MLC6S12X30
R220.94-0080	C04012-T15P	T15P-3	MC6S12X35
R220.94-0100-0125	C04012-T15P	T15P-3	–

Please check availability in current price and stock-list

Torque value 3,0 Nm, Torque keys, see page 690

R217/220.94-12 – Insert selection

SMG		a_p	f_z		
			100%	30%	10%
P1	LOEX120708TR-M12 F40M	6,0	0,18	0,20	0,30
P2	LOEX120708TR-M12 F40M	6,0	0,19	0,20	0,32
P3	LOEX120708TR-M12 MP2500	6,0	0,18	0,19	0,30
P4	LOEX120708TR-M12 MP2500	6,0	0,17	0,19	0,30
P5	LOEX120708TR-M12 MP2500	6,0	0,17	0,19	0,28
P6	LOEX120708TR-M12 MP2500	6,0	0,17	0,18	0,28
P7	LOEX120708TR-M12 MP2500	6,0	0,17	0,18	0,28
P8	LOEX120708TR-M12 MP2500	6,0	0,18	0,19	0,30
P11	LOEX120708TR-M12 MP3000	6,0	0,17	0,18	0,28
M1	LOEX120708TR-M12 F40M	6,0	0,19	0,20	0,32
M2	LOEX120708TR-M12 F40M	6,0	0,17	0,19	0,28
M3	LOEX120708TR-M12 F40M	5,0	0,14	0,15	0,22
M4	LOEX120708TR-M12 F40M	4,0	0,12	0,13	0,20
M5	LOEX120708TR-M12 F40M	4,0	0,12	0,13	0,20
K1	LOEX120708TR-MD13 MK2050	6,0	0,20	0,22	0,34
K2	LOEX120708TR-MD13 MK2050	6,0	0,18	0,20	0,30
K3	LOEX120708TR-MD13 MK2050	6,0	0,18	0,20	0,30
K4	LOEX120708TR-MD13 MK2050	6,0	0,18	0,20	0,30
K5	LOEX120708TR-MD13 MK2050	6,0	0,17	0,18	0,28
K6	LOEX120708TR-MD13 MK2050	6,0	0,18	0,20	0,30
K7	LOEX120708TR-MD13 MK2050	6,0	0,17	0,18	0,28
N1	LOEX120708TR-M12 F40M	6,0	0,24	0,26	0,40
N2	LOEX120708TR-M12 F40M	6,0	0,24	0,26	0,40
N3	LOEX120708TR-M12 F40M	6,0	0,24	0,26	0,40
N11	LOEX120708TR-M12 F40M	6,0	0,24	0,26	0,40
S1	LOEX120708TR-M12 T350M	4,0	0,12	0,13	0,20
S2	LOEX120708TR-M12 T350M	4,0	0,12	0,13	0,20
S3	LOEX120708TR-M12 T350M	4,0	0,11	0,12	0,19
S11	LOEX120708TR-M12 MS2050	4,5	0,14	0,15	0,24
S12	LOEX120708TR-M12 MS2050	4,5	0,14	0,15	0,24
S13	LOEX120708TR-M12 MS2050	4,0	0,12	0,13	0,20

SMG = Seco material group
f_z = mm/tooth
v_c= m/min
a_e/D_c = %
All cutting data are start values

R217/220.94-12 – Cutting data v_c = (m/min)

	MP1500			MP2500			MP3000			T350M			MK1500			MK2050		
SMG	100%	30%	10%	100%	30%	10%	100%	30%	10%	100%	30%	10%	100%	30%	10%	100%	30%	10%
P1	285	375	445	270	355	425	255	335	400	235	310	370	—	—	—	250	330	390
P2	275	365	435	260	345	405	245	330	385	225	300	355	—	—	—	240	320	380
P3	240	325	380	225	300	355	215	285	335	195	265	310	—	—	—	210	285	330
P4	215	285	335	200	265	315	190	250	295	175	230	275	—	—	—	185	250	290
P5	205	275	325	195	255	305	185	240	290	170	220	265	—	—	—	180	240	285
P6	230	305	365	215	290	340	205	275	325	190	255	300	—	—	—	200	265	320
P7	220	290	345	205	275	325	195	260	305	180	240	280	—	—	—	190	250	300
P8	205	275	320	190	255	300	180	240	285	165	220	260	—	—	—	175	240	280
P11	215	280	335	200	265	315	190	250	295	175	230	275	—	—	—	185	245	290
M1	—	—	—	185	250	290	185	245	285	175	235	270	—	—	—	—	—	—
M2	—	—	—	155	205	245	155	200	240	145	190	230	—	—	—	—	—	—
M3	—	—	—	125	170	200	125	165	195	120	155	185	—	—	—	—	—	—
K1	220	290	345	205	275	320	195	260	305	—	—	—	275	365	430	260	345	410
K2	195	260	310	185	240	290	175	230	275	—	—	—	245	325	385	235	310	365
K3	165	220	260	155	205	245	145	195	230	—	—	—	210	275	330	195	260	310
K4	160	210	250	150	195	235	140	185	220	—	—	—	200	260	315	190	250	295
K5	95	130	150	90	120	140	85	115	135	—	—	—	120	160	190	115	155	180
K6	140	185	220	130	170	205	125	165	195	—	—	—	175	230	275	165	220	260
K7	125	165	195	115	155	180	110	145	170	—	—	—	155	205	245	145	195	230
N1	—	—	—	—	—	—	—	—	—	—	—	—	—	—	—	—	—	—
N2	—	—	—	—	—	—	—	—	—	—	—	—	—	—	—	—	—	—
N3	—	—	—	—	—	—	—	—	—	—	—	—	—	—	—	—	—	—
N11	—	—	—	—	—	—	—	—	—	—	—	—	—	—	—	—	—	—
S1	—	—	—	—	—	—	46	60	70	43	55	65	—	—	—	—	—	—
S2	—	—	—	—	—	—	37	49	55	35	46	55	—	—	—	—	—	—
S3	—	—	—	—	—	—	32	43	50	31	41	48	—	—	—	—	—	—
S11	—	—	—	—	—	—	65	85	100	60	80	95	—	—	—	—	—	—
S12	—	—	—	—	—	—	36	48	55	34	46	55	—	—	—	—	—	—
S13	—	—	—	—	—	—	30	39	46	28	37	43	—	—	—	—	—	—

R217/220.94-12 – Cutting data v_c = (m/min)

	F40M			MM4500			MS2050			T25M		
SMG	100%	30%	10%	100%	30%	10%	100%	30%	10%	100%	30%	10%
P1	205	270	320	165	220	260	—	—	—	225	295	355
P2	195	260	305	160	215	250	—	—	—	215	290	335
P3	170	230	270	140	185	220	—	—	—	190	250	295
P4	155	200	235	125	165	190	—	—	—	170	220	260
P5	145	195	230	120	155	185	—	—	—	160	210	255
P6	165	220	260	135	180	210	—	—	—	180	240	285
P7	155	205	245	125	170	200	—	—	—	170	230	270
P8	145	195	225	115	155	185	—	—	—	160	210	250
P11	150	200	235	120	165	190	—	—	—	165	220	260
M1	155	210	245	135	180	215	205	260	295	175	235	270
M2	130	175	205	115	150	180	170	215	245	145	190	230
M3	105	140	170	90	120	145	140	165	185	115	155	185
M4	85	110	130	75	95	110	105	125	135	90	120	145
M5	70	95	110	60	80	95	85	105	115	75	100	120
K1	155	210	245	—	—	—	—	—	—	170	230	265
K2	140	185	220	—	—	—	—	—	—	155	200	240
K3	120	155	185	—	—	—	—	—	—	130	170	205
K4	110	150	175	—	—	—	—	—	—	125	160	195
K5	70	90	105	—	—	—	—	—	—	75	100	120
K6	100	130	155	—	—	—	—	—	—	110	145	170
K7	90	115	140	—	—	—	—	—	—	100	130	150
N1	570	760	900	—	—	—	—	—	—	—	—	—
N2	460	610	720	—	—	—	—	—	—	—	—	—
N3	305	410	480	—	—	—	—	—	—	—	—	—
N11	350	465	550	—	—	—	—	—	—	—	—	—
S1	39	50	60	22	29	34	37	49	55	—	—	—
S2	32	42	49	18	24	28	30	39	45	—	—	—
S3	28	37	43	16	21	24	27	35	41	—	—	—
S11	55	70	85	31	41	48	47	65	75	—	—	—
S12	31	42	49	24	31	37	36	49	60	—	—	—
S13	25	34	39	19	25	30	32	42	48	—	—	—

Square 6™ – R217.96-04

Slotting and contouring

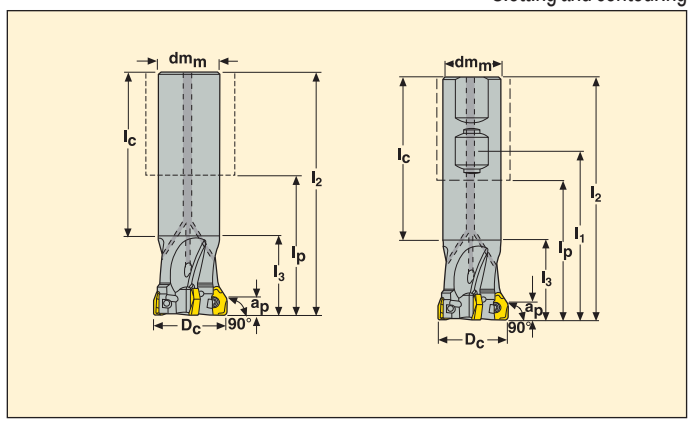

- For insert selection and cutting data recommendations, see page(s) 66-67
- For complete insert programme, see page(s) 637

Part No.	Type of mounting	Dimensions in mm									KG		Insert
		a_p	D_c	dm_m	l_1	l_2	l_3	l_p	l_c				
R217.96 -2020.0-04-2A	Cylindrical	4	20	20	–	150	29	100	121	2	1,9	29400	XNEX04..
-2020.3-04-2A	Cyl.-Weldon	4	20	20	65	90	29	40	61	2	1,9	29400	XNEX04..
R217.96 -2225.0-04-4A	Cylindrical	4	25	22	–	170	29	114	141	4	0,5	20000	XNEX04..
-2525.0-04-4A	Cylindrical	4	25	25	–	170	29	114	141	4	0,6	26300	XNEX04..
-2525.3-04-4A	Cyl.-Weldon	4	25	25	69	101	34	45	67	4	0,4	26300	XNEX04..
R217.96 -3032.0-04-5A	Cylindrical	4	32	30	–	195	31	135	164	5	1,0	23200	XNEX04..
-3232.0-04-5A	Cylindrical	4	32	32	–	195	31	135	164	5	1,2	23200	XNEX04..
-3232.3-04-5A	Cyl.-Weldon	4	32	32	69	105	37	45	68	5	0,5	23200	XNEX04..

Spare Parts

For cutter	Insert screw	Insert key
		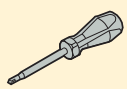
R217.96-..	C02506-T08P	T08P-3

Please check availability in current price and stock-list
Torque value 1,2 Nm, Torque keys, see page 690

Square 6™ – R217.96-04

Optimized for contouring

- For insert selection and cutting data recommendations, see page(s) 66-67
- For complete insert programme, see page(s) 637

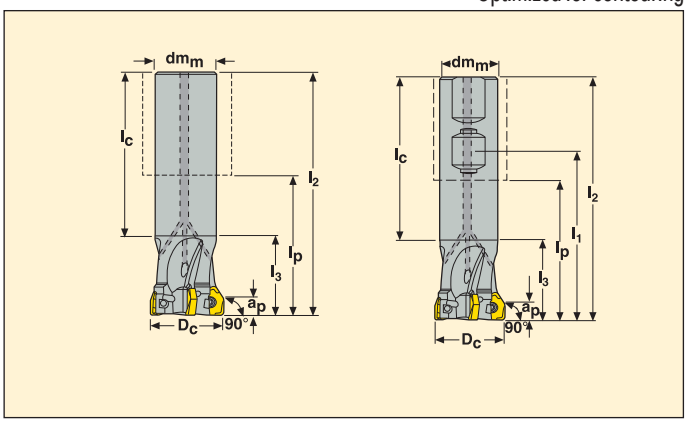

Part No.	Type of mounting	Dimensions in mm a_p	D_c	dm_m	l_1	l_2	l_3	l_p	l_c		KG		Insert
R217.96 -1820.0-04-3A	Cylindrical	4	20	18	–	150	29	100	121	3	0,3	29400	XNEX04..
-2020.0-04-3A	Cylindrical	4	20	20	–	150	29	100	121	3	0,3	29400	XNEX04..
-2020.3-04-3A	Cyl.-Weldon	4	20	20	65	90	29	40	61	3	0,2	29400	XNEX04..
R217.96 -2525.0-04-5A	Cylindrical	4	25	25	–	170	29	114	141	5	0,6	26300	XNEX04..
-2525.3-04-5A	Cyl.-Weldon	4	25	25	69	101	34	45	67	5	0,4	26300	XNEX04..
R217.96 -3232.0-04-6A	Cylindrical	4	32	32	–	195	31	135	164	6	1,2	23200	XNEX04..
-3232.3-04-6A	Cyl.-Weldon	4	32	32	69	105	37	45	68	6	0,6	23200	XNEX04..

Spare Parts

For cutter	Insert screw	Insert key
R217.96-..	C02506-T08P	T08P-3

Please check availability in current price and stock-list
Torque value 1,2 Nm, Torque keys, see page 690

Square 6™ – R217/220.96-04

Slotting and contouring

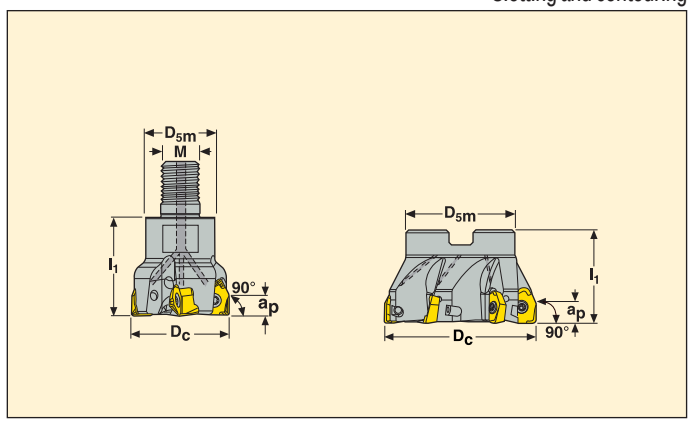

- For insert selection and cutting data recommendations, see page(s) 66-67
- For complete insert programme, see page(s) 637

Part No.	Type of mounting	Dimensions in mm a_p	D_c	D_{5m}	dm_m	M	l_1		KG		Insert
R217.96 -1020.RE-04-2A	Combimaster	4	20	18,3	–	M10	28	2	1,9	29400	XNEX04..
R217.96 -1225.RE-04-4A	Combimaster	4	25	23	–	M12	30	4	0,1	26300	XNEX04..
R217.96 -1632.RE-04-5A	Combimaster	4	32	30	–	M16	40	5	0,3	23200	XNEX04..
R220.96 -0032-04-4A	Arbor	4	32	35	16	–	40	4	0,2	23200	XNEX04..
R217.96 -2040.RE-04-6A	Combimaster	4	40	37	–	M20	40	6	0,4	20700	XNEX04..
R220.96 -0040-04-5A	Arbor	4	40,0	35	16	–	40	5	0,3	20700	XNEX04..
R220.96 -0050-04-6A	Arbor	4	50	47	22	–	40	6	0,4	18600	XNEX04..
R220.96 -0063-04-7A	Arbor	4	63	52	27	–	40	7	0,7	150000	XNEX04..

For Combimaster shanks and dimensions, see pages 588-598

Spare Parts

For cutter	Insert screw	Insert key	Arbor screw
R217.96-..	C02506-T08P	T08P-3	–
R220.96-0032-0040	C02506-T08P	T08P-2	TCEI0825
R220.96-0050	C02506-T08P	T08P-2	220.17-692
R220.96-0063	C02506-T08P	T08P-2	–

Please check availability in current price and stock-list

Torque value 1,2 Nm, Torque keys, see page 690

Square 6™ – R217/220.96-04

Optimized for contouring

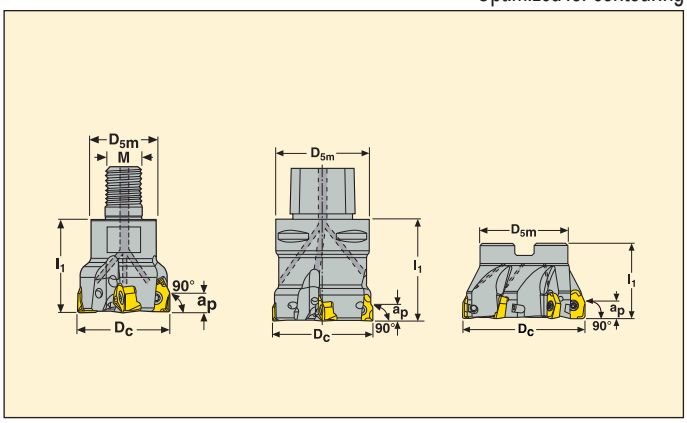

- For insert selection and cutting data recommendations, see page(s) 66-67
- For complete insert programme, see page(s) 637

Part No.	Type of mounting	Dimensions in mm								KG		Insert
		a_p	D_c	D_{5m}	dm_m	M	l_1	l_3				
R217.96 -1020.RE-04-3A	Combimaster	4	20	18,3	–	M10	28	–	3	0,1	29400	XNEX04..
R217.96 -1225.RE-04-5A	Combimaster	4	25	23	–	M12	30	–	5	0,1	26300	XNEX04..
R217.96 -1632.RE-04-6A	Combimaster	4	32	30	–	M16	40	–	6	0,3	23200	XNEX04..
R220.96 -0032-04-6A	Arbor	4	32	35	16	–	40	–	6	0,2	23200	XNEX04..
R217.96 -2040.RE-04-7A	Combimaster	4	40	37	–	M20	40	–	7	0,4	20700	XNEX04..
R220.96 -0040-04-6A	Arbor	4	40	35	16	–	40	–	6	0,3	20700	XNEX04..
-0040-04-7A	Arbor	4	40	35	16	–	40	–	7	0,3	20700	XNEX04..
C4-R217.96 -044-04-6A	Seco-Capto	4	44	40	–	–	50	50	6	0,5	19800	XNEX04..
R220.96 -0050-04-8A	Arbor	4	50	47	22	–	40	–	8	0,4	18600	XNEX04..
-0050-04-9A	Arbor	4	50	47	22	–	40	–	9	0,4	18600	XNEX04..
C5-R217.96 -054-04-8A	Seco-Capto	4	54	50	–	–	50	50	8	0,8	17900	XNEX04..
R220.96 -0063-04-9A	Arbor	4	63	52	27	–	40	–	9	0,7	16500	XNEX04..
-0063-04-10A	Arbor	4	63	52	27	–	40	–	10	0,7	16500	XNEX04..
C6-R217.96 -066-04-9A	Seco-Capto	4	66	63	–	–	60	60	9	1,5	16200	XNEX04..

Spare Parts

For cutter	Insert screw	Insert key	Arbor screw
		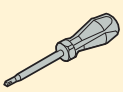	
R217.96-..	C02506-T08P	T08P-3	–
R220.96-0032	C02506-T08P	T08P-3	TCEI0825
R220.96-0040	C02506-T08P	T08P-2	TCEI0825
Cx-R217.96-..	C02506-T08P	T08P-3	–
R220.96-0050	C02506-T08P	T08P-2	220.17-692
R220.96-0063	C02506-T08P	T08P-2	–

Please check availability in current price and stock-list
Torque value 1,2 Nm, Torque keys, see page 690

R217/220.96-04 – Insert selection

SMG		a_p	f_z		
			100%	30%	10%
P1	XNEX040304TR-M08 F40M	2,0	0,11	0,13	0,19
P2	XNEX040304TR-M08 F40M	2,0	0,12	0,13	0,20
P3	XNEX040304TR-M08 MP2500	2,0	0,11	0,12	0,19
P4	XNEX040304TR-M08 MP2500	2,0	0,11	0,12	0,18
P5	XNEX040304TR-M08 MP2500	2,0	0,11	0,12	0,18
P6	XNEX040304TR-M08 MP2500	2,0	0,10	0,11	0,18
P7	XNEX040304TR-M08 MP2500	2,0	0,10	0,11	0,18
P8	XNEX040304TR-M08 MP2500	2,0	0,11	0,12	0,19
P11	XNEX040304TR-M08 MP3000	2,0	0,10	0,11	0,18
M1	XNEX040304R-M06 F40M	2,0	0,085	0,095	0,15
M2	XNEX040304R-M06 F40M	2,0	0,080	0,085	0,13
M3	XNEX040304R-M06 F40M	1,5	0,065	0,070	0,11
M4	XNEX040304R-M06 F40M	1,2	0,060	0,065	0,095
M5	XNEX040304R-M06 MM4500	1,2	0,060	0,065	0,095
K1	XNEX040304TR-M08 MK2050	2,0	0,12	0,13	0,20
K2	XNEX040304TR-M08 MK2050	2,0	0,11	0,12	0,18
K3	XNEX040304TR-M08 MK2050	2,0	0,11	0,12	0,18
K4	XNEX040304TR-M08 MK2050	2,0	0,11	0,12	0,18
K5	XNEX040304TR-M08 MK2050	2,0	0,095	0,10	0,16
K6	XNEX040304TR-M08 MK2050	2,0	0,11	0,12	0,18
K7	XNEX040304TR-M08 MK2050	2,0	0,095	0,10	0,16
N1	XNEX040304R-M06 F40M	2,0	0,11	0,12	0,19
N2	XNEX040304R-M06 F40M	2,0	0,11	0,12	0,19
N3	XNEX040304R-M06 F40M	2,0	0,11	0,12	0,19
N11	XNEX040304R-M06 F40M	2,0	0,11	0,12	0,19
S1	XNEX040304R-M06 F40M	1,2	0,060	0,065	0,095
S2	XNEX040304R-M06 F40M	1,2	0,060	0,065	0,095
S3	XNEX040304R-M06 F40M	1,2	0,055	0,060	0,090
S11	XNEX040304R-M06 MS2050	1,4	0,065	0,070	0,11
S12	XNEX040304R-M06 MS2050	1,4	0,065	0,070	0,11
S13	XNEX040304R-M06 MS2050	1,2	0,060	0,065	0,095
H5	XNEX040304TR-M08 MP2500	1,5	0,075	0,080	0,12
H8	XNEX040304TR-M08 MP3000	1,4	0,055	0,060	0,095
H11	XNEX040304TR-M08 MP2500	1,5	0,075	0,080	0,12
H12	XNEX040304TR-M08 MP2500	1,5	0,075	0,080	0,12

SMG = Seco material group
f_z = mm/tooth
v_c= m/min
a_e/D_c = %
All cutting data are start values

R217/220.96-04 – Cutting data v_c = (m/min)

	MP1020			MP1500			MP2500			MP3000			F40M		
SMG	100%	30%	10%	100%	30%	10%	100%	30%	10%	100%	30%	10%	100%	30%	10%
P1	405	455	480	350	455	540	310	405	480	325	430	510	235	305	365
P2	395	445	465	335	445	530	295	395	465	320	415	485	225	300	355
P3	340	380	405	295	390	460	260	345	405	275	365	425	200	260	310
P4	305	340	355	260	345	405	230	305	360	245	320	380	175	230	270
P5	295	325	340	250	330	385	220	290	340	235	310	365	165	220	260
P6	330	365	380	285	375	440	255	335	390	260	345	405	190	250	295
P7	310	345	360	270	355	415	240	315	370	245	330	385	180	240	280
P8	285	320	340	250	330	385	220	290	340	230	305	355	165	220	260
P11	300	335	350	260	345	405	230	305	355	240	320	375	175	230	270
M1	—	—	—	—	—	—	215	285	335	240	310	365	180	240	285
M2	—	—	—	—	—	—	175	235	275	195	260	305	150	200	235
M3	—	—	—	—	—	—	145	190	225	155	205	240	125	160	190
M4	—	—	—	—	—	—	115	145	175	120	160	185	95	125	145
M5	—	—	—	—	—	—	95	120	145	100	135	155	80	105	120
K1	—	—	—	265	350	415	235	310	370	250	330	385	180	235	280
K2	—	—	—	235	310	365	210	275	325	220	295	345	160	210	245
K3	—	—	—	200	265	310	175	235	275	190	250	290	135	175	210
K4	—	—	—	190	250	295	170	225	260	180	235	280	130	170	200
K5	—	—	—	120	155	180	105	140	160	110	145	170	80	105	120
K6	—	—	—	170	220	260	150	195	230	160	210	245	110	150	175
K7	—	—	—	150	200	230	135	175	205	140	185	215	100	135	155
N1	—	—	—	—	—	—	870	1175	1375	930	1225	1425	660	880	1050
N2	—	—	—	—	—	—	710	940	1100	750	1000	1150	540	710	840
N3	—	—	—	—	—	—	470	630	740	500	660	770	355	475	560
N11	—	—	—	—	—	—	540	720	850	580	760	880	410	540	640
S1	—	—	—	—	—	—	55	70	85	55	75	85	45	60	70
S2	—	—	—	—	—	—	44	60	70	45	60	70	36	47	55
S3	—	—	—	—	—	—	39	50	60	40	50	60	32	41	48
S11	—	—	—	—	—	—	75	100	115	80	105	120	60	80	95
S12	—	—	—	—	—	—	44	60	70	46	60	70	36	47	55
S13	—	—	—	—	—	—	35	46	55	36	48	55	29	38	44
H5	—	—	—	55	75	85	45	60	70	48	65	75	37	49	55
H8	—	—	—	60	80	90	48	65	75	50	65	75	40	50	60
H11	—	—	—	70	95	110	55	75	90	60	80	95	47	60	75
H12	—	—	—	105	140	165	85	115	135	95	120	140	70	95	110

R217/220.96-04 – Cutting data v_c = (m/min)

	MK1500			MK2050			MM4500			MS2050		
SMG	100%	30%	10%	100%	30%	10%	100%	30%	10%	100%	30%	10%
P1	—	—	—	305	400	470	210	280	330	255	290	305
P2	—	—	—	295	385	460	205	270	315	245	280	310
P3	—	—	—	260	340	400	180	235	275	210	235	255
P4	—	—	—	225	300	355	160	205	245	180	205	215
P5	—	—	—	215	285	335	150	200	235	175	190	205
P6	—	—	—	250	330	385	170	225	265	195	215	230
P7	—	—	—	235	310	360	160	215	250	185	200	215
P8	—	—	—	215	285	335	150	200	230	180	195	215
P11	—	—	—	230	300	350	155	205	240	180	195	210
M1	—	—	—	—	—	—	175	230	270	215	245	270
M2	—	—	—	—	—	—	145	190	225	170	185	200
M3	—	—	—	—	—	—	115	155	180	115	125	135
M4	—	—	—	—	—	—	90	120	140	80	75	85
M5	—	—	—	—	—	—	75	100	115	65	65	70
K1	335	440	520	315	420	495	—	—	—	250	285	310
K2	295	390	460	280	370	435	—	—	—	210	230	245
K3	250	330	390	235	315	370	—	—	—	180	195	210
K4	240	315	370	225	300	350	—	—	—	170	185	200
K5	150	195	230	140	185	215	—	—	—	95	105	110
K6	210	280	330	200	265	310	—	—	—	150	165	175
K7	190	250	290	180	240	275	—	—	—	120	135	145
N1	—	—	—	—	—	—	—	—	—	—	—	—
N2	—	—	—	—	—	—	—	—	—	—	—	—
N3	—	—	—	—	—	—	—	—	—	—	—	—
N11	—	—	—	—	—	—	—	—	—	—	—	—
S1	—	—	—	—	—	—	27	37	42	55	70	80
S2	—	—	—	—	—	—	22	29	34	46	60	65
S3	—	—	—	—	—	—	19	25	30	41	50	55
S11	—	—	—	—	—	—	39	50	60	80	100	110
S12	—	—	—	—	—	—	30	39	45	60	75	85
S13	—	—	—	—	—	—	24	31	37	49	60	70
H5	—	—	—	—	—	—	—	—	—	—	—	—
H8	—	—	—	—	—	—	—	—	—	—	—	—
H11	—	—	—	—	—	—	—	—	—	—	—	—
H12	—	—	—	—	—	—	—	—	—	—	—	—

Square 6™ – R217.96-08

Slotting and contouring

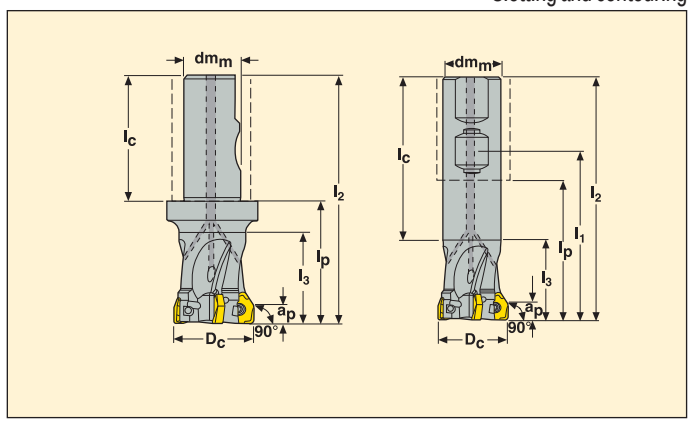

- For insert selection and cutting data recommendations, see page(s) 73–74
- For complete insert programme, see page(s) 637

Part No.	Type of mounting	Dimensions in mm									KG		Insert
		a_p	D_c	dm_m	l_1	l_2	l_3	l_p	l_c				
R217.96 -3240.3-08-3A	Cyl.-Weldon	7,5	40	32	84	120	35	60	85	3	0,7	11800	XNEX08..
R217.96 -3240.3S-08-3A	Seco-Weldon	7,5	40	32	–	120	50	60	60	3	0,8	11800	XNEX08..

Spare Parts

For cutter	Insert screw	Insert key
R217.96-..	C04011-T15P	T15P-4

Please check availability in current price and stock-list
Torque value 3,5 Nm. Torque keys, see page 690

Square 6™ – R217/220.96-08

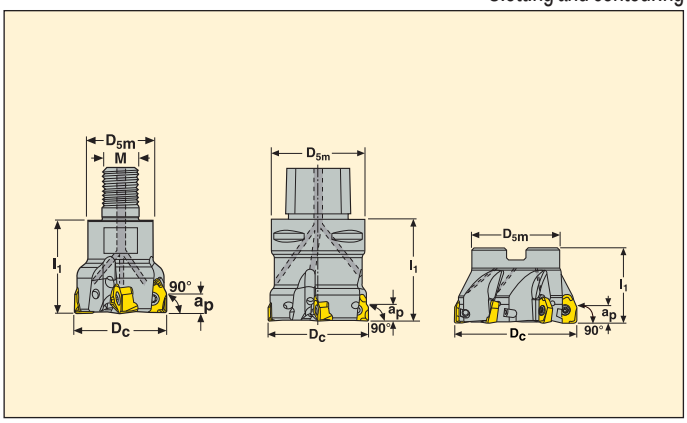

- For insert selection and cutting data recommendations, see page(s) 73–74
- For complete insert programme, see page(s) 637

Part No.	Type of mounting	Dimensions in mm							KG		Insert
		a_p	D_c	D_{5m}	dm_m	M	l_1				
R217.96 -1640.RE-08-3A	Combimaster	7,5	40	28	–	M16	40	3	0,3	11800	XNEX08..
-2040.RE-08-3A	Combimaster	7,5	40	36,5	–	M20	40	3	0,4	11800	XNEX08..
C4-R217.96 -044-08-3A	Seco-Capto	7,5	44	40	–	–	60	3	0,6	11300	XNEX08..
R220.96 -0050-08-4A	Arbor	7,5	50	47	22	–	40	4	0,3	10600	XNEX0806
C5-R217.96 -054-08-4A	Seco-Capto	7,5	54	50	–	–	60	4	0,9	10200	XNEX08..
R220.96 -0063-08-4A	Arbor	7,5	63	47	22	–	40	4	0,5	9400	XNEX0806
-0063-08-6A	Arbor	7,5	63	47	22	–	40	6	0,5	9400	XNEX0806
-0063-08-6A-27	Arbor	7,5	63	62	27	–	40	6	0,6	9400	XNEX08..
C5-R217.96 -063-08-6A	Seco-Capto	7,5	63	50	–	–	60	6	1,0	9400	XNEX08..
C6-R217.96 -066-08-6A	Seco-Capto	7,0	66	63	–	–	60	6	1,3	9400	XNEX08..
-066-08-7A	Seco-Capto	7,0	66	63	–	–	60	7	1,4	9400	XNEX08..
R220.96 -0080-08-5A	Arbor	7,5	80	62	27	–	50	5	1,1	8400	XNEX0806
-0080-08-7A	Arbor	7,5	80	62	27	–	50	7	1,0	8400	XNEX08..
C6-R217.96 -080-08-7A	Seco-Capto	7,5	80	63	–	–	60	7	1,7	8400	XNEX08..
R220.96 -0100-08-6A	Arbor	7,5	100	77	32	–	50	6	1,6	7500	XNEX0806
-0100-08-8A	Arbor	7,5	100	77	32	–	50	8	1,5	7500	XNEX08..
-0125-08-7A	Arbor	7,5	125	90	40	–	63	7	2,9	6700	XNEX08..
-0125-08-11A	Arbor	7,5	125	90	40	–	63	11	2,8	6700	XNEX08..
-8160-08-12	Arbor	7,5	160	90	40	–	63	12	4,8	5900	XNEX0806

Spare Parts

For cutter	Insert screw	Insert key	Arbor screw
R217.96-..	C04011-T15P	T15P-4	–
C.-R217.96-..	C04011-T15P	T15P-4	–
R220.96-0050	C04011-T15P	T15P-4	220.17-696
R220.96-0063	C04011-T15P	T15P-4	220.17-692
R220.96-0080	C04011-T15P	T15P-4	MC6S12X35
R220.96-0100-8160	C04011-T15P	T15P-4	–

Please check availability in current price and stock-list
Torque value 3,5 Nm. Torque keys, see page 690

Square 6™ – R217/220.96-08

Optimized for contouring

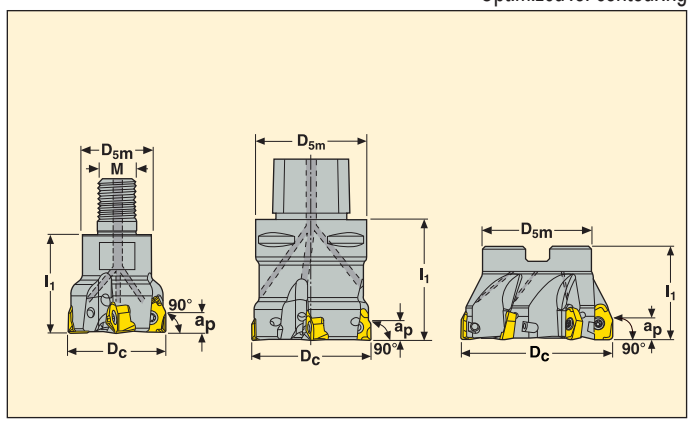

- For insert selection and cutting data recommendations, see page(s) 73–74
- For complete insert programme, see page(s) 637

Part No.	Type of mounting	Dimensions in mm							KG		Insert
		a_p	D_c	D_{5m}	dm_m	M	l_1				
R217.96 -1640.RE-08-4A	Combimaster	7,5	40	28	–	M16	40	4	0,2	11800	XNEX08..
R217.96 -2040.RE-08-4A	Combimaster	7,5	40	36,5	–	M20	40	4	0,4	11800	XNEX08..
C4-R217.96 -044-08-4A	Seco-Capto	7,5	44	40	–	–	60	4	0,5	11300	XNEX08..
R220.96 -0050-08-5A	Arbor	7,5	50	47	22	–	40	5	0,3	10600	XNEX0806
C5-R217.96 -054-08-5A	Seco-Capto	7,5	54	50	–	–	60	5	0,9	10200	XNEX08..
R220.96 -0063-08-7A	Arbor	7,5	63	47	22	–	40	7	0,7	9400	XNEX08..
-0063-08-7A-27	Arbor	7,5	63	62	27	–	40	7	0,6	9400	XNEX08..
C5-R217.96 -063-08-7A	Seco-Capto	7,5	63	50	–	–	60	7	1,0	9400	XNEX08..
R220.96 -0080-08-9A	Arbor	7,5	80	62	27	–	50	9	1,0	8400	XNEX08..
C6-R217.96 -080-08-9A	Seco-Capto	7,5	80	63	–	–	60	9	1,2	8400	XNEX08..
R220.96 -0100-08-11A	Arbor	7,5	100	77	32	–	50	11	1,5	7500	XNEX08..
-0125-08-14A	Arbor	7,5	125	90	40	–	63	14	2,7	6700	XNEX08..
-8160-08-16	Arbor	7,5	160	90	40	–	63	16	4,8	5900	XNEX0806

For Combimaster shanks and dimensions, see pages 588-598

Spare Parts

For cutter	Insert screw	Insert key	Arbor screw
R217.96-..	C04011-T15P	T15P-4	–
C.-R217.96-..	C04011-T15P	T15P-4	–
R220.96-0050	C04011-T15P	T15P-4	220.17-696
R220.96-0063	C04011-T15P	T15P-4	220.17-692
R220.96-0080	C04011-T15P	T15P-4	MC6S12X35
R220.96-0100-8160	C04011-T15P	T15P-4	–

Please check availability in current price and stock-list

Torque value 3,5 Nm. Torque keys, see page 690

Square 6™ – R220.96-08

Slotting and contouring

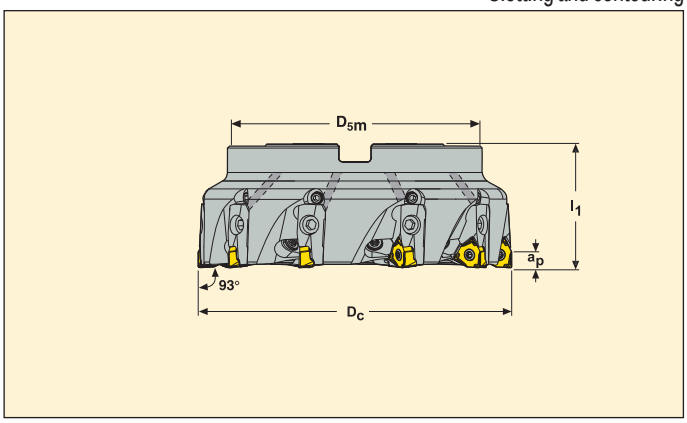

- For insert selection and cutting data recommendations, see page(s) 73–74
- For complete insert programme, see page(s) 637

Part No.	Type of mounting	Dimensions in mm a_p	D_c	D_{5m}	dm_m	l_1		KG		Insert
R220.96 -8160-08-7C	Arbor	7,0	160	130	40	63	7	5,6	5900	XNEX08..
R220.96 -8200-08-8C	Arbor	7,0	200	160	60	63	8	8,0	5300	XNEX08..
R220.96 -8250-08-10C	Arbor	7,0	250	210	60	63	10	15,2	4200	XNEX08..
R220.96 -8315-08-12C	Arbor	7,0	315	225	60	63	12	25,9	4200	XNEX08..

Spare Parts

For cutter	Wedge screw	Wedge clamp radial adj.	Wedge clamp axial adj.	Insert screw	Insert/clamp key	Cassette screw	Cassette
R220.96	LD8020-T25P	CW0810	AU1114T-T15P	C04011-T15P	T15P-4	FS96018	XN08PRN

Please check availability in current price and stock-list
Torque value 3,5 Nm. Torque keys, see page 690

Square 6™ – R220.96-08

Optimized for contouring

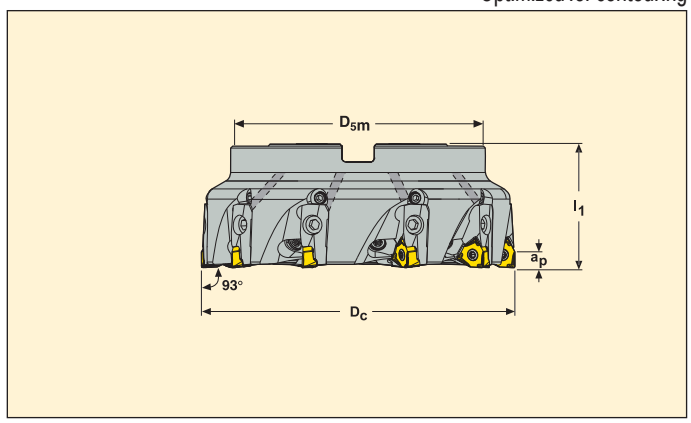

- For insert selection and cutting data recommendations, see page(s) 73–74
- For complete insert programme, see page(s) 637

Part No.	Type of mounting	Dimensions in mm						KG		Insert
		a_p	D_c	D_{5m}	dm_m	l_1				
R220.96 -8160-08-10C	Arbor	7,0	160	130	40	63	10	5,5	5900	XNEX08..
R220.96 -8200-08-12C	Arbor	7,0	200	160	60	63	12	7,8	5300	XNEX08..
R220.96 -8250-08-16C	Arbor	7,0	250	210	60	63	16	14,9	4200	XNEX08..
R220.96 -8315-08-20C	Arbor	7,0	315	225	60	63	20	26,0	4200	XNEX08..

Spare Parts

For cutter	Wedge screw	Wedge clamp radial adj.	Wedge clamp axial adj.	Insert screw	Insert/clamp key	Cassette screw	Cassette
R220.96	LD8020-T25P	CW0810	AU1114T-T15P	C04011-T15P	T15P-4	FS96018	XN08PRN

Please check availability in current price and stock-list
Torque value 3,5 Nm. Torque keys, see page 690

R217/220.96-08 – Insert selection

SMG		a_p	f_z		
			100%	30%	10%
P1	XNEX080608TR-ME09 F40M	3,5	0,13	0,14	0,22
P2	XNEX080608TR-ME09 F40M	3,5	0,13	0,14	0,22
P3	XNEX080608TR-M13 MP2500	3,5	0,18	0,20	0,30
P4	XNEX080608TR-M13 MP2500	3,5	0,18	0,19	0,30
P5	XNEX080608TR-M13 MP2500	3,5	0,17	0,19	0,30
P6	XNEX080608TR-M13 MP2500	3,5	0,17	0,19	0,28
P7	XNEX080608TR-M13 MP2500	3,5	0,17	0,19	0,28
P8	XNEX080608TR-M13 MP2500	3,5	0,18	0,20	0,30
P11	XNEX080608TR-M13 T350M	3,5	0,17	0,19	0,28
M1	XNEX080608R-M08 F40M	3,5	0,12	0,13	0,20
M2	XNEX080608R-M08 F40M	3,5	0,11	0,12	0,18
M3	XNEX080608R-M08 F40M	3,0	0,085	0,095	0,14
M4	XNEX080608R-M08 T350M	2,0	0,080	0,085	0,13
M5	XNEX080608R-M08 T350M	2,0	0,080	0,085	0,13
K1	XNEX080608TR-M13 MK2050	3,5	0,19	0,20	0,32
K2	XNEX080608TR-M13 MK2050	3,5	0,17	0,19	0,30
K3	XNEX080608TR-M13 MK2050	3,5	0,17	0,19	0,30
K4	XNEX080608TR-M13 MK2050	3,5	0,17	0,19	0,30
K5	XNEX080608TR-M13 MK2050	3,5	0,16	0,17	0,26
K6	XNEX080608TR-M13 MK2050	3,5	0,17	0,19	0,30
K7	XNEX080608TR-M13 MK2050	3,5	0,16	0,17	0,26
N1	XNEX080608R-M08 H25	3,5	0,15	0,16	0,24
N2	XNEX080608R-M08 H25	3,5	0,15	0,16	0,24
N3	XNEX080608R-M08 H25	3,5	0,15	0,16	0,24
N11	XNEX080608R-M08 H25	3,5	0,15	0,16	0,24
S1	XNEX080608R-M08 T350M	2,0	0,080	0,085	0,13
S2	XNEX080608R-M08 T350M	2,0	0,080	0,085	0,13
S3	XNEX080608R-M08 T350M	2,0	0,075	0,080	0,12
S11	XNEX080608R-M08 MS2050	2,5	0,085	0,095	0,15
S12	XNEX080608R-M08 MS2050	2,5	0,085	0,095	0,15
S13	XNEX080608R-M08 MS2050	2,0	0,080	0,085	0,13
H5	XNEX080608TR-M13 MP1500	3,0	0,12	0,13	0,20
H8	XNEX080608TR-M13 MP2500	2,5	0,090	0,10	0,15
H11	XNEX080608TR-M13 MP1500	3,0	0,12	0,13	0,20
H12	XNEX080608TR-M13 MP1500	3,0	0,12	0,13	0,20

SMG = Seco material group
f_z = mm/tooth
v_c= m/min
a_e/D_c = %
All cutting data are start values

R217/220.96-08 – Cutting data v_c = (m/min)

	MP1020			MP1500			MP2500			MP3000			T350M			F40M		
SMG	100%	30%	10%	100%	30%	10%	100%	30%	10%	100%	30%	10%	100%	30%	10%	100%	30%	10%
P1	265	355	380	345	460	540	305	405	475	290	385	450	265	355	415	230	305	360
P2	260	320	370	335	445	520	295	395	465	280	375	440	260	345	405	225	300	350
P3	235	295	335	295	385	460	260	340	410	245	320	385	225	295	355	195	260	310
P4	210	260	295	260	345	405	230	305	360	215	290	340	200	265	315	175	230	270
P5	210	260	280	245	330	385	220	290	345	205	275	325	190	255	300	165	220	260
P6	235	290	330	275	370	435	245	325	385	235	310	365	215	285	335	185	250	290
P7	225	275	310	260	350	410	230	310	365	220	295	345	200	270	315	175	235	275
P8	200	250	280	245	325	385	220	285	345	205	270	325	190	250	300	165	215	260
P11	215	265	300	255	340	400	225	300	355	215	285	335	195	260	310	170	225	270
M1	—	—	—	—	—	—	215	285	335	210	280	330	200	265	310	180	240	285
M2	—	—	—	—	—	—	175	235	275	175	230	270	165	220	255	150	200	235
M3	—	—	—	—	—	—	145	190	220	140	185	220	135	175	205	120	160	190
M4	—	—	—	—	—	—	110	145	170	110	145	170	105	135	160	95	125	145
M5	—	—	—	—	—	—	90	120	145	90	120	140	85	115	135	80	105	120
K1	—	—	—	265	355	415	235	315	365	220	295	345	205	275	320	180	235	280
K2	—	—	—	235	310	370	210	275	325	195	260	310	180	240	285	155	210	245
K3	—	—	—	200	265	310	175	235	275	165	220	260	155	205	240	135	175	210
K4	—	—	—	190	250	295	170	225	265	160	210	250	145	195	230	125	170	200
K5	—	—	—	115	155	180	100	135	160	95	130	150	90	120	140	75	105	120
K6	—	—	—	165	220	260	150	195	230	140	185	220	130	170	200	110	150	175
K7	—	—	—	150	195	230	130	175	205	125	165	195	115	150	180	100	130	155
N1	—	—	—	—	—	—	860	1150	1350	810	1100	1275	—	—	—	650	870	1025
N2	—	—	—	—	—	—	690	930	1100	660	880	1050	—	—	—	520	710	830
N3	—	—	—	—	—	—	460	620	730	435	590	690	—	—	—	350	470	550
N11	—	—	—	—	—	—	530	710	840	500	670	790	—	—	—	400	540	630
S1	—	—	—	—	—	—	55	70	85	50	65	80	48	65	75	44	60	70
S2	—	—	—	—	—	—	43	60	65	41	55	65	39	50	60	35	47	55
S3	—	—	—	—	—	—	38	50	60	36	48	55	34	46	55	31	41	48
S11	—	—	—	—	—	—	75	100	115	70	95	110	65	90	105	60	80	95
S12	—	—	—	—	—	—	43	55	70	41	55	65	39	50	60	35	47	55
S13	—	—	—	—	—	—	35	46	55	33	44	50	31	41	48	28	38	44
H5	—	—	—	55	70	85	44	60	70	43	55	70	42	55	65	37	49	60
H8	—	—	—	60	75	90	47	60	75	46	60	70	45	60	70	39	50	60
H11	—	—	—	70	95	110	55	75	90	55	75	85	55	70	85	47	60	75
H12	—	—	—	115	150	180	90	120	145	90	120	140	90	115	135	75	100	120

R217/220.96-08 – Cutting data v_c = (m/min)

	MK1500			MK2050			MM4500			MS2050			MS2500			H25		
SMG	100%	30%	10%	100%	30%	10%	100%	30%	10%	100%	30%	10%	100%	30%	10%	100%	30%	10%
P1	—	—	—	235	320	380	185	250	290	265	305	340	340	450	530	—	—	—
P2	—	—	—	230	310	370	180	245	285	260	305	330	325	430	510	—	—	—
P3	—	—	—	205	275	325	160	210	250	220	255	280	285	380	450	—	—	—
P4	—	—	—	180	240	285	140	185	220	195	225	245	250	335	395	—	—	—
P5	—	—	—	175	230	270	135	180	210	185	215	235	240	320	375	—	—	—
P6	—	—	—	195	260	310	150	200	235	205	235	255	275	365	430	—	—	—
P7	—	—	—	185	245	295	140	190	225	195	225	245	260	345	405	—	—	—
P8	—	—	—	175	230	270	135	175	210	185	215	235	240	320	375	—	—	—
P11	—	—	—	180	235	285	140	185	215	190	215	235	255	335	395	—	—	—
M1	—	—	—	—	—	—	155	210	245	225	265	290	230	310	370	—	—	—
M2	—	—	—	—	—	—	130	170	200	180	210	230	190	255	300	—	—	—
M3	—	—	—	—	—	—	105	135	165	130	145	155	155	205	245	—	—	—
M4	—	—	—	—	—	—	80	105	125	95	100	105	120	160	190	—	—	—
M5	—	—	—	—	—	—	65	90	105	80	85	85	100	135	160	—	—	—
K1	265	355	420	250	335	400	—	—	—	260	305	335	255	340	405	—	—	—
K2	235	315	370	225	300	350	—	—	—	225	260	285	225	300	360	—	—	—
K3	200	265	315	190	250	295	—	—	—	190	220	240	190	255	305	—	—	—
K4	190	255	300	180	240	285	—	—	—	180	210	230	185	245	290	—	—	—
K5	115	155	185	110	145	175	—	—	—	105	120	130	115	150	175	—	—	—
K6	170	225	265	160	210	250	—	—	—	160	185	200	160	215	255	—	—	—
K7	150	200	235	140	190	225	—	—	—	135	150	165	145	195	225	—	—	—
N1	—	—	—	—	—	—	—	—	—	—	—	—	—	—	—	630	840	1000
N2	—	—	—	—	—	—	—	—	—	—	—	—	—	—	—	510	680	810
N3	—	—	—	—	—	—	—	—	—	—	—	—	—	—	—	340	455	540
N11	—	—	—	—	—	—	—	—	—	—	—	—	—	—	—	385	520	610
S1	—	—	—	—	—	—	25	33	38	49	65	70	60	80	90	—	—	—
S2	—	—	—	—	—	—	20	26	31	39	50	60	47	65	75	—	—	—
S3	—	—	—	—	—	—	18	23	27	35	45	50	42	55	65	—	—	—
S11	—	—	—	—	—	—	35	46	55	65	85	100	85	110	130	—	—	—
S12	—	—	—	—	—	—	27	35	41	50	65	75	48	65	75	—	—	—
S13	—	—	—	—	—	—	21	28	33	42	55	60	38	50	60	—	—	—
H5	—	—	—	—	—	—	—	—	—	—	—	—	48	65	75	—	—	—
H8	—	—	—	—	—	—	—	—	—	—	—	—	50	70	80	—	—	—
H11	—	—	—	—	—	—	—	—	—	—	—	—	60	80	95	—	—	—
H12	—	—	—	—	—	—	—	—	—	—	—	—	100	130	155	—	—	—

Mini Square – R217.99-09

Slotting and contouring

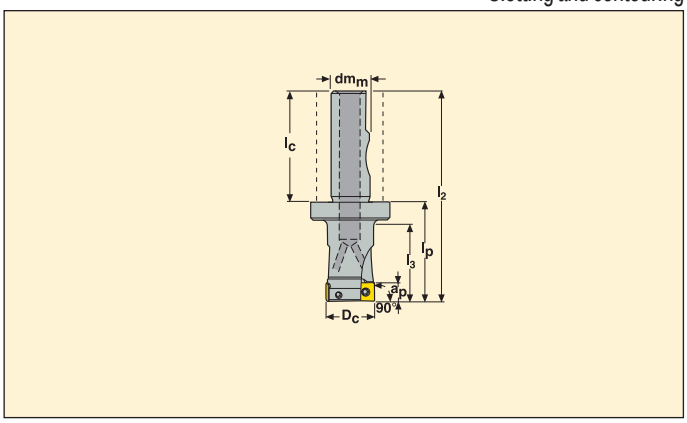

- For insert selection and cutting data recommendations, see page(s) 77–78
- For complete insert programme, see page(s) 631

Part No.	Type of mounting	Dimensions in mm								KG		Insert
		a_p	D_c	dm_m	l_2	l_3	l_p	l_c				
R217.99 -2025.3S-09-2A	Seco-Weldon	8	25	20	100	37	50	50	2	0,3	21100	SONX09T3
-2532.3S-09-3A	Seco-Weldon	8	32	25	111	43	56	55	3	0,5	18600	SONX09T3

Spare Parts

For cutter	Insert screw	Insert key
		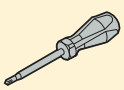
R217.99-..	C03006-T09P	T09P-3

Please check availability in current price and stock-list
Torque value 2,0 Nm, Torque keys, see page 690

Mini Square – R217.99-09

Slotting and contouring

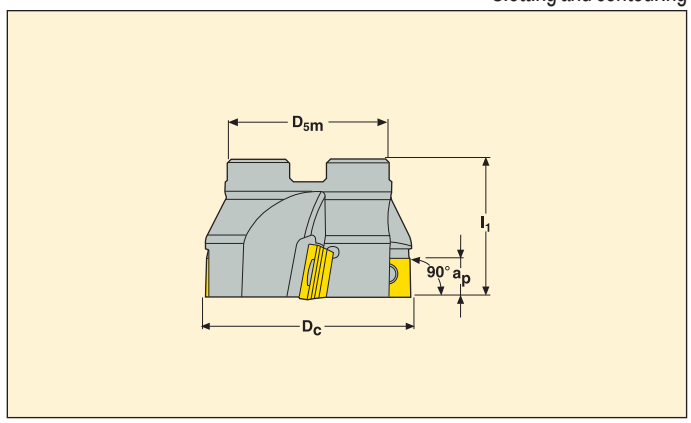

- For insert selection and cutting data recommendations, see page(s) 77–78
- For complete insert programme, see page(s) 631

Part No.	Type of mounting	Dimensions in mm a_p	D_c	D_{5m}	dm_m	l_1		KG		Insert
R220.99 -0040-09-3	Arbor	8	40	35	16	40	3	0,2	16600	SONX09T3
-0040-09-4T	Arbor	8	40	35	16	40	4	0,2	16600	SONX09T3
-0050-09-4	Arbor	8	50	47	22	40	4	0,4	14800	SONX09T3
-0050-09-6T	Arbor	8	50	47	22	40	6	0,3	14800	SONX09T3
-0063-09-7T	Arbor	8	63	47	22	40	7	0,5	13200	SONX09T3

Spare Parts

For cutter	Insert screw	Insert key	Arbor screw
R220.99-0040	C03006-T09P	T09P-3	MC6S8X30
R220.99-0050-0063	C03006-T09P	T09P-3	220.17-692

Please check availability in current price and stock-list

Torque value 2,0 Nm, Torque keys, see page 690

R217/220.99-09 – Insert selection

SMG		a_p	f_z		
			100%	30%	10%
P1	SONX09T304TR-ME06 F40M	4,0	0,085	0,090	0,14
P2	SONX09T304TR-ME06 F40M	4,0	0,085	0,095	0,14
P3	SONX09T304TR-M10 MP2500	4,0	0,14	0,15	0,22
P4	SONX09T304TR-M10 MP2500	4,0	0,13	0,15	0,22
P5	SONX09T304TR-M10 MP2500	4,0	0,13	0,14	0,22
P6	SONX09T304TR-M10 MP2500	4,0	0,13	0,14	0,22
P7	SONX09T304TR-M10 MP2500	4,0	0,13	0,14	0,22
P8	SONX09T304TR-M10 MP2500	4,0	0,14	0,15	0,22
P11	SONX09T304TR-M10 F40M	4,0	0,13	0,14	0,22
M1	SONX09T304TR-ME06 F40M	4,0	0,085	0,095	0,14
M2	SONX09T304TR-ME06 F40M	4,0	0,080	0,085	0,13
M3	SONX09T304TR-ME06 F40M	3,0	0,065	0,070	0,11
M4	SONX09T304TR-M10 F40M	2,5	0,090	0,10	0,15
M5	SONX09T304TR-M10 F40M	2,5	0,090	0,10	0,15
K1	SONX09T308TR-M10 MK2050	4,0	0,15	0,16	0,24
K2	SONX09T308TR-M10 MK2050	4,0	0,13	0,14	0,22
K3	SONX09T308TR-M10 MK2050	4,0	0,13	0,14	0,22
K4	SONX09T308TR-M10 MK2050	4,0	0,13	0,14	0,22
K5	SONX09T308TR-M10 MK2050	4,0	0,12	0,13	0,20
K6	SONX09T308TR-M10 MK2050	4,0	0,13	0,14	0,22
K7	SONX09T308TR-M10 MK2050	4,0	0,12	0,13	0,20
N1	SONX09T304TR-ME06 F40M	4,0	0,11	0,12	0,18
N2	SONX09T304TR-ME06 F40M	4,0	0,11	0,12	0,18
N3	SONX09T304TR-ME06 F40M	4,0	0,11	0,12	0,18
N11	SONX09T304TR-ME06 F40M	4,0	0,11	0,12	0,18
S1	SONX09T304TR-M10 T350M	2,5	0,090	0,10	0,15
S2	SONX09T304TR-M10 T350M	2,5	0,090	0,10	0,15
S3	SONX09T304TR-M10 T350M	2,5	0,085	0,095	0,14
S11	SONX09T304TR-M10 T350M	2,5	0,11	0,11	0,18
S12	SONX09T304TR-ME06 F40M	2,5	0,065	0,070	0,11
H5	SONX09T304TR-M10 MP1500	3,0	0,090	0,095	0,15
H11	SONX09T304TR-M10 MP1500	3,0	0,090	0,095	0,15
H12	SONX09T304TR-M10 MP1500	3,0	0,090	0,095	0,15

SMG = Seco material group
f_z = mm/tooth
v_c= m/min
a_e/D_c = %
All cutting data are start values

R217/220.99-09 – Cutting data v_c = (m/min)

	MP1500			MP2500			T350M			F40M			MK1500			MK2050		
SMG	100%	30%	10%	100%	30%	10%	100%	30%	10%	100%	30%	10%	100%	30%	10%	100%	30%	10%
P1	325	440	510	290	390	455	255	340	395	220	295	345	—	—	—	290	385	455
P2	320	420	500	285	370	440	245	325	385	215	280	335	—	—	—	285	375	445
P3	275	370	440	245	325	390	210	285	340	185	245	295	—	—	—	245	330	390
P4	245	325	385	220	285	345	190	250	300	165	215	260	—	—	—	220	290	345
P5	235	315	370	210	280	325	180	245	285	160	210	250	—	—	—	210	280	330
P6	265	355	415	235	315	365	205	275	320	180	235	280	—	—	—	235	315	370
P7	250	335	390	220	295	345	195	260	300	170	225	265	—	—	—	220	300	350
P8	230	310	370	205	275	325	180	240	285	155	205	250	—	—	—	205	275	330
P11	245	325	380	215	285	335	185	250	295	165	220	255	—	—	—	215	290	340
M1	—	—	—	205	270	320	190	250	295	175	225	270	—	—	—	—	—	—
M2	—	—	—	170	225	265	155	210	245	140	190	225	—	—	—	—	—	—
M3	—	—	—	140	185	215	130	170	200	115	155	180	—	—	—	—	—	—
M4	—	—	—	105	140	165	100	130	155	90	120	140	—	—	—	—	—	—
M5	—	—	—	90	120	140	80	110	130	75	100	115	—	—	—	—	—	—
K1	255	330	395	225	295	350	195	255	305	170	225	265	325	425	500	305	405	480
K2	225	300	350	200	265	310	175	230	270	150	200	235	285	385	450	270	365	425
K3	190	255	295	170	225	265	145	195	230	125	170	200	245	325	380	230	310	360
K4	180	240	285	160	215	250	140	185	220	120	160	190	230	310	360	220	295	345
K5	110	145	175	95	130	155	85	115	135	75	100	115	140	190	220	135	180	210
K6	160	215	250	140	190	220	125	165	190	105	145	165	205	275	320	195	260	300
K7	140	190	220	125	165	195	110	145	170	95	125	150	180	240	285	170	230	270
N1	—	—	—	820	1100	1300	—	—	—	620	830	980	—	—	—	—	—	—
N2	—	—	—	660	880	1050	—	—	—	500	670	790	—	—	—	—	—	—
N3	—	—	—	440	590	700	—	—	—	335	445	530	—	—	—	—	—	—
N11	—	—	—	510	670	800	—	—	—	385	510	610	—	—	—	—	—	—
S1	—	—	—	50	70	80	46	60	70	42	55	65	—	—	—	—	—	—
S2	—	—	—	42	55	65	37	50	60	34	45	55	—	—	—	—	—	—
S3	—	—	—	36	49	55	33	43	50	30	39	46	—	—	—	—	—	—
S11	—	—	—	75	95	115	65	85	100	60	80	90	—	—	—	—	—	—
S12	—	—	—	42	55	65	37	50	60	34	45	55	—	—	—	—	—	—
H5	50	70	80	42	55	65	40	55	65	35	47	55	—	—	—	—	—	—
H11	65	90	105	55	70	85	50	70	80	45	60	70	—	—	—	—	—	—
H12	110	145	170	85	115	135	85	110	130	70	95	115	—	—	—	—	—	—

Midi Square – R220.99-12

Slotting and contouring

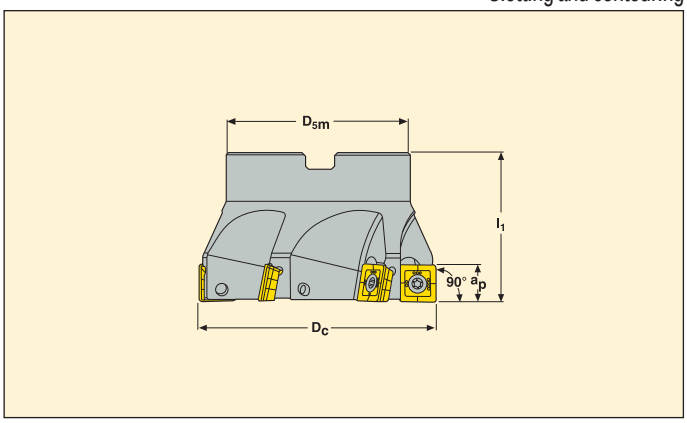

- For insert selection and cutting data recommendations, see page(s) 80–81
- For complete insert programme, see page(s) 631

Part No.		Type of mounting	Dimensions in mm a_p	D_c	D_{5m}	dm_m	l_1		KG		Insert
R220.99	-0050-12-4	Arbor	11	50	47	22	40	4	0,3	10800	SONX1205
	-0050-12-5T	Arbor	11	50	42,0	22	40	5	0,3	10800	SONX1205
	-0063-12-4	Arbor	11	63	47	22	40	4	0,6	9600	SONX1205
	-0063-12-6T	Arbor	11	63	47	22	40	6	0,5	9600	SONX1205
	-0080-12-6	Arbor	11	80	62	27	50	6	1,1	8400	SONX1205
	-0100-12-8	Arbor	11	100	77	32	50	8	1,5	7600	SONX1205

Spare Parts

For cutter	Insert screw	Insert key	Arbor screw
R220.99-0050-0063	C04011-T15P	T15P-4	220.17-692
R220.99-0080	C04011-T15P	T15P-4	MC6S12X40
R220.99-0100	C04011-T15P	T15P-4	–

Please check availability in current price and stock-list
Torque value 3,5 Nm. Torque keys, see page 690

R217/220.99-12 – Insert selection

SMG		a_p	f_z		
			100%	30%	10%
P1	SONX120508TR-ME08 F40M	5,0	0,11	0,12	0,19
P2	SONX120508TR-ME08 F40M	5,0	0,12	0,13	0,19
P3	SONX120508TR-M12 MP2500	5,0	0,16	0,18	0,28
P4	SONX120508TR-M12 MP2500	5,0	0,16	0,18	0,28
P5	SONX120508TR-M12 MP2500	5,0	0,16	0,17	0,26
P6	SONX120508TR-M12 MP2500	5,0	0,16	0,17	0,26
P7	SONX120508TR-M12 MP2500	5,0	0,16	0,17	0,26
P8	SONX120508TR-M12 MP2500	5,0	0,16	0,18	0,28
P11	SONX120508TR-M12 T350M	5,0	0,16	0,17	0,26
M1	SONX120508TR-ME08 F40M	5,0	0,12	0,13	0,19
M2	SONX120508TR-ME08 F40M	5,0	0,11	0,11	0,18
M3	SONX120508TR-M12 F40M	4,5	0,13	0,14	0,22
M4	SONX120508TR-M12 F40M	3,0	0,11	0,12	0,19
M5	SONX120508TR-M12 F40M	3,0	0,11	0,12	0,19
K1	SONX120508TR-M12 MK2050	5,0	0,17	0,19	0,30
K2	SONX120508TR-M12 MK2050	5,0	0,16	0,17	0,26
K3	SONX120508TR-M12 MK2050	5,0	0,16	0,17	0,26
K4	SONX120508TR-M12 MK2050	5,0	0,16	0,17	0,26
K5	SONX120508TR-M12 MK2050	5,0	0,14	0,16	0,24
K6	SONX120508TR-M12 MK2050	5,0	0,16	0,17	0,26
K7	SONX120508TR-M12 MK2050	5,0	0,14	0,16	0,24
N1	SONX120508TR-ME08 F40M	5,0	0,15	0,16	0,24
N2	SONX120508TR-ME08 F40M	5,0	0,15	0,16	0,24
N3	SONX120508TR-ME08 F40M	5,0	0,15	0,16	0,24
N11	SONX120508TR-ME08 F40M	5,0	0,15	0,16	0,24
S1	SONX120508TR-M12 T350M	3,0	0,11	0,12	0,19
S2	SONX120508TR-M12 T350M	3,0	0,11	0,12	0,19
S3	SONX120508TR-M12 T350M	3,0	0,10	0,11	0,18
S11	SONX120508TR-M12 T350M	4,0	0,13	0,14	0,22
S12	SONX120508TR-ME08 F40M	4,0	0,085	0,095	0,14
H5	SONX120508TR-M12 MP1500	4,5	0,11	0,12	0,18
H11	SONX120508TR-M12 MP1500	4,5	0,11	0,12	0,18
H12	SONX120508TR-M12 MP1500	4,5	0,11	0,12	0,18

SMG = Seco material group
f_z = mm/tooth
v_c= m/min
a_e/D_c = %
All cutting data are start values

R217/220.99-12 – Cutting data v_c = (m/min)

	MP1500			MP2500			T350M			F40M			MK1500			MK2050		
SMG	100%	30%	10%	100%	30%	10%	100%	30%	10%	100%	30%	10%	100%	30%	10%	100%	30%	10%
P1	310	415	495	275	365	440	240	320	380	210	280	330	—	—	—	270	360	430
P2	305	405	480	270	360	425	235	310	370	205	270	325	—	—	—	265	350	420
P3	265	355	415	235	315	365	205	270	320	180	235	280	—	—	—	235	310	360
P4	235	310	375	210	275	330	180	240	290	160	210	250	—	—	—	205	270	325
P5	225	300	355	200	265	315	175	235	275	150	200	240	—	—	—	195	265	310
P6	250	340	400	225	300	355	195	260	310	170	225	270	—	—	—	220	295	350
P7	240	320	375	210	285	335	185	245	290	160	215	255	—	—	—	205	280	330
P8	225	295	350	200	265	310	175	230	270	150	200	235	—	—	—	195	260	305
P11	230	310	365	205	275	325	180	240	285	155	210	245	—	—	—	200	270	320
M1	—	—	—	195	260	305	180	240	285	165	220	260	—	—	—	—	—	—
M2	—	—	—	160	215	255	150	200	235	135	180	215	—	—	—	—	—	—
M3	—	—	—	130	175	200	120	165	190	110	150	170	—	—	—	—	—	—
M4	—	—	—	100	140	160	95	130	150	85	115	135	—	—	—	—	—	—
M5	—	—	—	85	115	135	80	105	125	70	95	115	—	—	—	—	—	—
K1	240	320	380	215	285	340	185	245	295	160	215	255	300	400	480	285	380	455
K2	215	285	340	190	255	300	165	220	260	145	190	225	265	360	425	255	340	400
K3	180	240	285	160	215	255	140	185	220	120	165	190	225	305	360	215	290	340
K4	170	230	275	150	205	240	135	180	210	115	155	185	215	290	340	205	275	325
K5	105	145	165	95	125	145	80	110	130	70	95	110	135	180	210	125	170	195
K6	150	205	240	135	180	215	115	155	185	100	135	160	190	255	300	180	240	285
K7	135	185	215	120	160	190	105	140	165	90	125	145	170	230	265	160	215	255
N1	—	—	—	780	1050	1250	—	—	—	590	790	940	—	—	—	—	—	—
N2	—	—	—	630	840	1000	—	—	—	475	640	760	—	—	—	—	—	—
N3	—	—	—	420	560	670	—	—	—	315	425	510	—	—	—	—	—	—
N11	—	—	—	480	640	760	—	—	—	365	485	580	—	—	—	—	—	—
S1	—	—	—	49	65	80	44	60	70	40	55	65	—	—	—	—	—	—
S2	—	—	—	40	55	65	36	48	55	32	44	50	—	—	—	—	—	—
S3	—	—	—	35	48	55	32	43	49	29	39	45	—	—	—	—	—	—
S11	—	—	—	70	90	105	60	85	95	55	75	85	—	—	—	—	—	—
S12	—	—	—	39	55	60	35	48	55	32	43	50	—	—	—	—	—	—
H11	65	85	100	50	70	80	49	65	80	43	60	70	—	—	—	—	—	—
H12	105	140	165	85	110	130	80	105	125	70	95	110	—	—	—	—	—	—

Helical milling cutters

Cutters	Insert	Material suitability P	M	K	N	S	Corner radius (mm)					
Turbo	XO..06	■	■	■	■	■	0,2 / 0,4 / 0,8 / 1,6	■	□	■	■	◩
	XO..10	■	■	■	■	■	0,4 / 0,8 / 1,2 / 1,6 / 2,0 / 2,4 / 3,1	■	◩	■	■	◩
	XO..12	■	■	■	■	■	0,4 / 0,8 / 1,2 / 1,6 / 2,0 / 2,4 / 3,1 / 4 / 5,0/ 6,3	◩	■	■	■	◩
	XO..18	■	■	■	■	■	0,4 / 0,8 / 1,2 / 1,6 / 2,0 / 2,4 / 3,1 / 4,0 / 5,0/ 6,3	□	■	■	■	◩
Helical T4	LO..08	■	□	■	–	◩	0,4 / 0,8 / 1,2 / 1,6	◩	◩	◩	–	□
	LO..12	■	◩	■	◩	◩	0,4 / 0,8 / 1,2 / 1,6 / 2,0 / 2,4 / 3,1	◩	◩	◩	–	□
215/220.59	AC15/ SC12	◩	◩	◩	□	□	1,2/3,1/6,0	–	■	□	–	□
220.69-15	ACET15	◩	◩	◩	□	□	1,2/3,1/6,0	–	■	□	–	□

Helical solution for side-finishing operation (small radial engagement)

235.15		■	■	■	-	■	chamfer	■	■	◩	-	-

1st choice	■	High speed machine with low Power / Torque		Unstable condition suitability	
Alternative choice	◩	Strong stable machine with rigid connection		Ramping ability	
Possible choice	□	Not recommended	-	Plunging ability	

Helical milling cutters

No. of cutting edges	Applica-tion	Cutter diameter available/maximum depth of cut														See page
		12	14	16	20	25	32	40	44	50	54	63	66	80	100	
2		10	15	15	20											85
				16	20											87
2					25	25	34	34		42						90
						42	50	58	58	42	66					92
2						33	33	33	33	44	44	55	44	66		96
							55	66		106		107		107		98
2								47		62	47	62	47	62	62	103
										77		93		93	77	105
4						36	36	36		43						108
						43	50	50	57	57	64					110
4										46		46				108
										58		81		69	81	110
2 & 4 half effective										77		77		68	77	118
2 & 4 full and half effective										72/120		72/160		72/95		122
2												38		38/50		126

1							40			50				90		129

x	Slotting and contouring operations (x indicates the maximum depth of cut)
x	For contouring operations only(x indicates the maximum depth of cut)

Slotting and contouring

Contouring only

Code key

Note that parts of the code can vary for different cutter systems

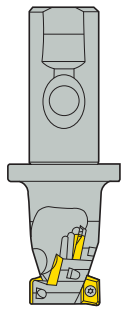

Right hand rotation	217 = With shank 220 = For arbor	Cutter system	Shank diameter	Cutter diameter	Shank type	Max. axial cutting depht	Insert size	Effective No. of flutes (Z_c)	Through coolant supply
R	217 .	69 -	25	32 .	3S -	042 -	10 .	4	A

Dimensions of mounting

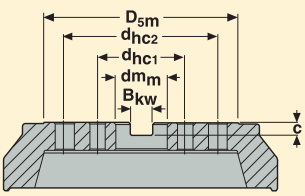

Dimensions in mm						Spindle-nose
D_{5m}	dm_m	B_{kw}	c	d_{hc1}	d_{hc2}	
30-35	16	8,4	5,6	–	–	–
42-47	22	10,4	6.3	–	–	–
48-62	27	12,4	7	–	–	–
60-90	32	14,4	8	–	–	–
90-130	40	16,4	9	66,7	–	(8xxx)
130-270	60	25,7	14	101,6	177,8	(8xxx)

For a more exact D_{5m} and dm_m measurement, see each product table.

Turbo 06 – R217.69-06

Slotting and contouring

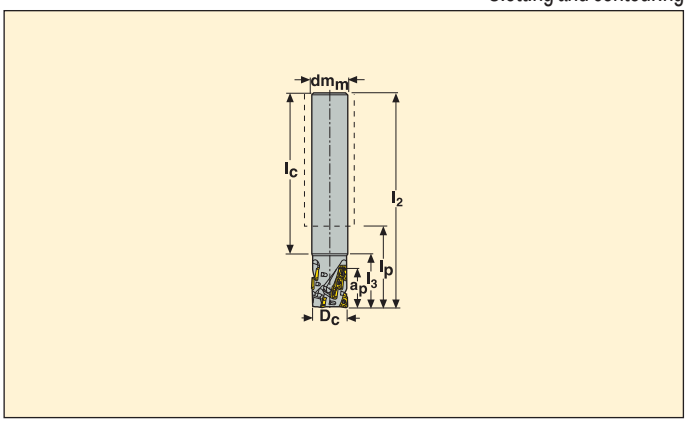

- For insert selection and cutting data recommendations, see page(s) 88–89
- For complete insert programme, see page(s) 85
- For helical interpolation, see page(s) 682-683

Part No.	Type of mounting	Dimensions in mm							α° max	Z_c*		KG		Insert
		a_p	D_c	dm_m	l_2	l_3	l_p	l_c						
R217.69 -1612.0-10-06.2N	Cylindrical	10	12	16	98	23	53	66	6,5	2	4	0,2	54400	XO.X06..**
-1616.0-15-06.3N	Cylindrical	15	16	16	110	30	62	80	4,0	3	9	0,2	48000	XO.X06..**

Ramping angle = α°

*Effective number of flutes

**All corner radii can be used in front row insert, modification of the body needed for radii > 0,8mm

Spare Parts

For cutter	Insert screw	Insert key
		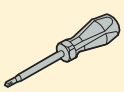
R217.69-..	C01804-T06P	T06P-3

Please check availability in current price and stock-list

Torque value 0,5 Nm. Torque keys, see page 690

Turbo 06 – R217.69-06

Slotting and contouring

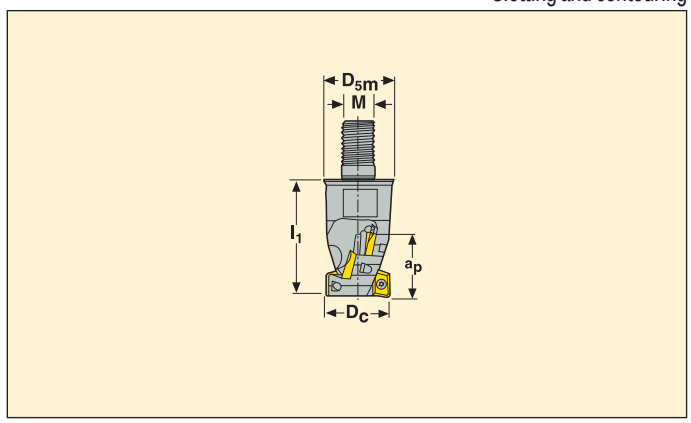

- For insert selection and cutting data recommendations, see page(s) 88–89
- For complete insert programme, see page(s) 86
- For helical interpolation, see page(s) 682-683

Part No.	Type of mounting	Dimensions in mm					α° max	Z_c*		KG		Insert
		a_p	D_c	D_{5m}	M	l_1						
R217.69 -0814.RE-15-06.2N	Combimaster	15	14	13,2	M8	25	5,0	2	6	0,1	51200	XO.X06..**
-0816.RE-15-06.2N	Combimaster	15	16	13,5	M8	25	4,0	2	6	0,1	48000	XO.X06..**
-0816.RE-15-06.3N	Combimaster	15	16	13,5	M8	25	6	3	9	0,1	48000	XO.X06..**
-1020.RE-20-06.3AN	Combimaster	20	20	18,5	M10	35	4,5	3	12	0,1	44800	XO.X06..**

*Effective number of flutes
Ramping angle = α°

**All corner radii can be used in front row insert, modification of the body needed for radii > 0,8mm
For Combimaster shanks and dimensions, see pages 588-598

Spare Parts

For cutter	Insert screw	Insert key
		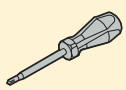
R217.69-..	C01804-T06P	T06P-3

Please check availability in current price and stock-list
Torque value 0,5 Nm. Torque keys, see page 690

Turbo 06 – R217.69-06

Contouring only

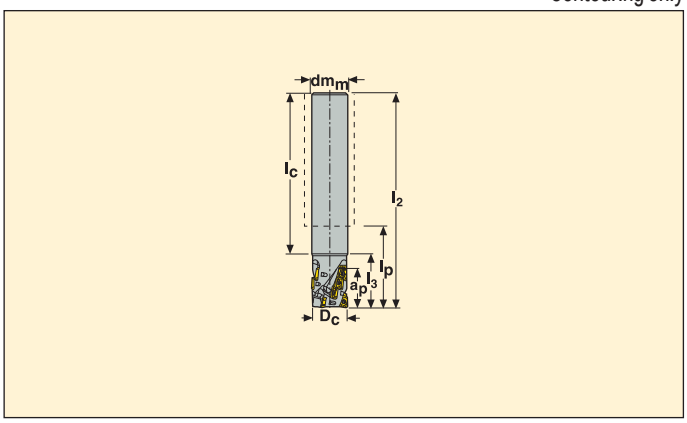

- For insert selection and cutting data recommendations, see page(s) 88–89
- For complete insert programme, see page(s) 87
- For helical interpolation, see page(s) 682-683

Part No.	Type of mounting	Dimensions in mm							α° max	Z_c*		KG		Insert
		a_p	D_c	dm_m	l_2	l_3	l_p	l_c						
R217.69 -1616.0-20-06.2N	Cylindrical	20	16	16	110	30	62	80	4,0	2	8	0,2	48000	XO.X06..**
-2020.0-25-06.3N	Cylindrical	25	20	20	120	35	70	85	2,5	3	15	0,3	44000	XO.X06..**

Ramping angle = α°

*Effective number of flutes

**All corner radii can be used in front row insert, modification of the body needed for radii > 0,8mm

Spare Parts

For cutter	Insert screw	Insert key
		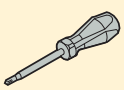
R217.69-..	C01804-T06P	T06P-3

Please check availability in current price and stock-list

Torque value 0,5 Nm. Torque keys, see page 690

R217.69-06 – Insert selection

SMG		f_z		
		100%	30%	10%
P1	XOMX060204R-M05 F40M	0,055	0,060	0,095
P2	XOMX060204R-M05 F40M	0,055	0,065	0,095
P3	XOMX060204R-M05 F40M	0,055	0,060	0,090
P4	XOMX060204R-M05 F40M	0,055	0,060	0,090
P5	XOMX060204R-M05 F40M	0,050	0,055	0,085
P6	XOMX060204R-M05 F40M	0,050	0,055	0,085
P7	XOMX060204R-M05 F40M	0,050	0,055	0,085
P8	XOMX060204R-M05 F40M	0,055	0,060	0,090
P11	XOMX060204R-M05 MP3000	0,050	0,055	0,085
M1	XOMX060204R-M05 F40M	0,055	0,065	0,095
M2	XOMX060204R-M05 F40M	0,050	0,055	0,085
M3	XOMX060204R-M05 F40M	0,042	0,046	0,070
M4	XOMX060204R-M05 MP3000	0,036	0,040	0,060
M5	XOMX060204R-M05 MM4500	0,036	0,040	0,060
K1	XOMX060204R-M05 MP3000	0,055	0,065	0,095
K2	XOMX060204R-M05 MP3000	0,050	0,055	0,085
K3	XOMX060204R-M05 MP3000	0,050	0,055	0,085
K4	XOMX060204R-M05 MP3000	0,050	0,055	0,085
K5	XOMX060204R-M05 MP3000	0,046	0,050	0,080
K6	XOMX060204R-M05 MP3000	0,050	0,055	0,085
K7	XOMX060204R-M05 MP3000	0,046	0,050	0,080
N1	XOEX060204FR-E03 H15	0,060	0,065	0,10
N2	XOMX060204R-M05 MP3000	0,075	0,080	0,12
N3	XOMX060204R-M05 MP3000	0,075	0,080	0,12
N11	XOEX060204FR-E03 H15	0,060	0,065	0,10
S1	XOMX060204R-M05 F40M	0,036	0,040	0,060
S2	XOMX060204R-M05 F40M	0,036	0,040	0,060
S3	XOMX060204R-M05 F40M	0,034	0,036	0,055
S11	XOMX060204R-M05 F40M	0,042	0,046	0,070
S12	XOMX060204R-M05 F40M	0,042	0,046	0,070
S13	XOMX060204R-M05 F40M	0,036	0,040	0,060
H11	XOMX060204R-M05 MP3000	0,036	0,038	0,060
H12	XOMX060204R-M05 MP3000	0,036	0,038	0,060

SMG = Seco material group
f_z = mm/tooth
v_c= m/min
a_e/D_c = %
All cutting data are start values

R217.69-06 – Cutting data v_c = (m/min)

SMG	MP3000			F40M			MM4500			H15		
	100%	30%	10%	100%	30%	10%	100%	30%	10%	100%	30%	10%
P1	175	195	205	160	180	190	145	165	175	—	—	—
P2	175	190	205	160	175	190	145	160	175	—	—	—
P3	165	180	195	150	165	180	135	155	165	—	—	—
P4	155	175	185	140	160	170	125	145	155	—	—	—
P5	155	170	180	140	155	170	125	145	155	—	—	—
P6	160	180	190	145	165	175	135	150	160	—	—	—
P7	160	175	185	145	160	170	130	145	155	—	—	—
P8	150	170	180	140	155	165	125	140	155	—	—	—
P11	155	175	185	140	160	170	125	145	155	—	—	—
M1	155	170	185	145	160	175	135	150	165	—	—	—
M2	140	160	170	130	150	160	120	140	150	—	—	—
M3	125	145	155	115	135	145	105	125	135	—	—	—
M4	110	125	135	100	115	125	90	105	120	—	—	—
M5	95	115	125	85	105	115	75	95	105	—	—	—
K1	160	175	185	145	160	170	—	—	—	—	—	—
K2	150	170	180	135	155	165	—	—	—	—	—	—
K3	140	155	170	125	140	155	—	—	—	—	—	—
K4	135	155	165	120	140	150	—	—	—	—	—	—
K5	105	120	130	90	105	115	—	—	—	—	—	—
K6	130	145	155	115	130	140	—	—	—	—	—	—
K7	120	135	145	105	120	135	—	—	—	—	—	—
N1	245	265	275	230	250	260	—	—	—	235	250	265
N2	230	250	260	215	235	245	—	—	—	220	240	250
N3	205	225	235	190	210	220	—	—	—	195	210	220
N11	215	230	245	200	215	230	—	—	—	200	220	230
S1	60	75	85	50	65	75	29	37	44	—	—	—
S2	47	60	70	41	55	60	23	30	35	—	—	—
S3	41	55	65	35	47	55	20	26	31	—	—	—
S11	80	100	110	70	90	100	40	55	60	—	—	—
S12	47	60	75	41	55	65	31	40	47	—	—	—
S13	38	49	60	33	43	50	25	32	38	—	—	—
H11	65	80	90	55	70	80	—	—	—	—	—	—
H12	95	115	125	85	105	115	—	—	—	—	—	—

Turbo 10 – R217.69-10

Slotting and contouring

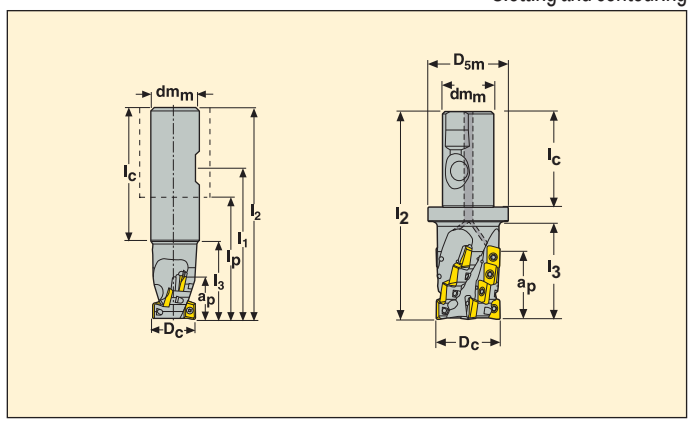

- For insert selection and cutting data recommendations, see page(s) 94–95
- For complete insert programme, see page(s) 640
- For helical interpolation, see page(s) 682-683

Part No.	Type of mounting	Dimensions in mm									α° max	Z_c*		KG		Insert
		a_p	D_c	D_{5m}	dm_m	l_1	l_2	l_3	l_p	l_c						
R217.69 -2020.3-017-10.2A	Cyl.-Weldon	17	20	–	20	59	85	35	35	50	4,5	2	4	0,2	26300	XO.X10T3..**
-2020.3-025-10.1A	Cyl.-Weldon	25	20	–	20	64	95	45	40	50	4,5	1	3	0,3	26300	XO.X10T3..**
R217.69 -2525.3-025-10.2A	Cyl.-Weldon	25	25	–	25	63	100	44	44	50	3,0	2	6	0,4	23500	XO.X10T3..**
-2025.3S-025-10.3A	Seco-Weldon	25	25	35	20	–	100	43	50	50	3,0	3	9	0,4	23500	XO.X10T3..***
R217.69 -2532.3S-034-10.4A	Seco-Weldon	34	32	40	25	–	110	43	54	56	2,0	4	16	0,5	20800	XO.X10T3..***

*Effective number of flutes
Ramping angle = α°

**All corner radii can be used in front row insert, modification of the body needed for radii > 2,0mm
***Maxi corner radii 1,6mm can be used in front row insert

Spare Parts

For cutter	Insert screw	Insert key
R217.69-..	C02506-T07P	T07P-3

Please check availability in current price and stock-list
Torque value 0,9 Nm, Torque keys, see page 690

Turbo 10 – R217/220.69-10

Slotting and contouring

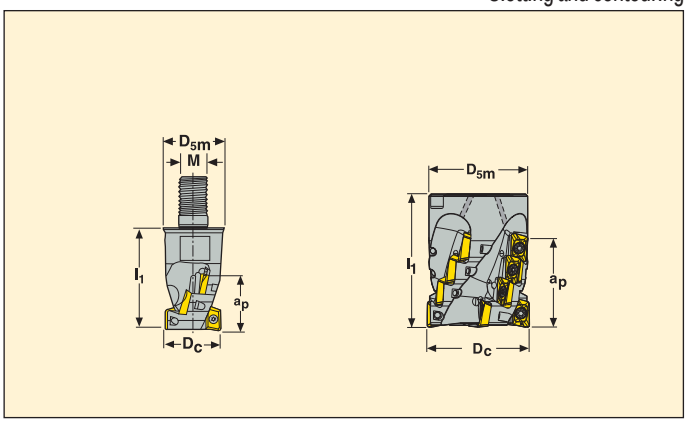

- For insert selection and cutting data recommendations, see page(s) 94–95
- For complete insert programme, see page(s) 640
- For helical interpolation, see page(s) 682-683

Part No.	Type of mounting	Dimensions in mm						α° max	Z_c*		KG		Insert
		a_p	D_c	D_{5m}	dm_m	M	l_1						
R217.69 -1020.RE-017-10.2A	Combimaster	17	20	18,5	–	M10	28	4,5	2	4	0,1	26300	XO.X10T3..**
R217.69 -1225.RE-017-10.3A	Combimaster	17	25	23	–	M12	35	3	3	6	0,1	23500	XO.X10T3..***
-1225.RE-025-10.2A	Combimaster	25	25	23	–	M12	40	3	2	6	0,1	23500	XO.X10T3..**
R217.69 -1632.RE-025-10.3A	Combimaster	25	32	30	–	M16	45	2	3	9	0,2	20800	XO.X10T3..**
R217.69 -2040.RE-034-10.4A	Combimaster	34	40	36,5	–	M20	55	1,5	4	16	0,4	18600	XO.X10T3..**
R220.69 -00040-034-10.4A	Arbor	34	40	35	16	–	55	1,5	4	16	0,3	18600	XO.X10T3..**
R220.69 -00050-042-10.5A	Arbor	42	50	48	27	–	65	1,2	5	25	0,5	16600	XO.X10T3..**

*Effective number of flutes
Ramping angle = α°.

**All corner radii can be used in front row insert, modification of the body needed for radii > 2,0mm
***Maxi corner radii 1,6mm can be used in front row insert

Spare Parts

For cutter	Insert screw	Insert key	Arbor screw
R217.69-..	C02506-T07P	T07P-3	–
R220.69-00040	C02506-T07P	T07P-3	950D0850
R220.69-00050	C02506-T07P	T07P-3	MC6S12X60

Please check availability in current price and stock-list
Torque value 0,9 Nm, Torque keys, see page 690

For Combimaster shanks and dimensions, see pages 572-581 MN2015 Milling

Turbo 10 – R217.69-10

Contouring only

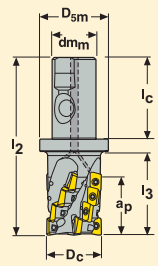

- For insert selection and cutting data recommendations, see page(s) 94–95
- For complete insert programme, see page(s) 640
- For helical interpolation, see page(s) 682-683

Part No.	Type of mounting	Dimensions in mm a_p	D_c	D_{5m}	dm_m	l_2	l_3	l_c	α° max	Z_c*		KG		Insert
R217.69 -2025.3S-034-10.3A	Seco-Weldon	34	25	35	20	100	43	50	3,0	3	12	0,4	23500	XO.X10T3..***
-2525.3S-034-10.3A	Seco-Weldon	34	25	40	25	110	43	56	3,0	3	12	0,4	23500	XO.X10T3..***
R217.69 -2525.3S-042-10.2A	Seco-Weldon	42	25	40	25	120	53	56	3,0	2	10	0,5	23500	XO.X10T3..**
-2532.3S-042-10.4A	Seco-Weldon	42	32	40	25	120	53	56	2,0	4	20	0,4	20800	XO.X10T3..***
R217.69 -2532.3S-050-10.3A	Seco-Weldon	50	32	40	25	130	63	56	2,0	3	18	0,5	20800	XO.X10T3..**
R217.69 -3240.3S-058-10.4A	Seco-Weldon	58	40	50	32	144	72	60	1,5	4	28	0,9	18600	XO.X10T3..**

*Effective number of flutes
Ramping angle = α°

**All corner radii can be used in front row insert, modification of the body needed for radii > 2,0mm
***Maxi corner radii 1,6mm can be used in front row insert

Spare Parts

For cutter	Insert screw	Insert key
R217.69-..	C02506-T07P	T07P-3

Please check availability in current price and stock-list
Torque value 0,9 Nm, Torque keys, see page 690

Turbo 10 – R217/220.69-10

Contouring only

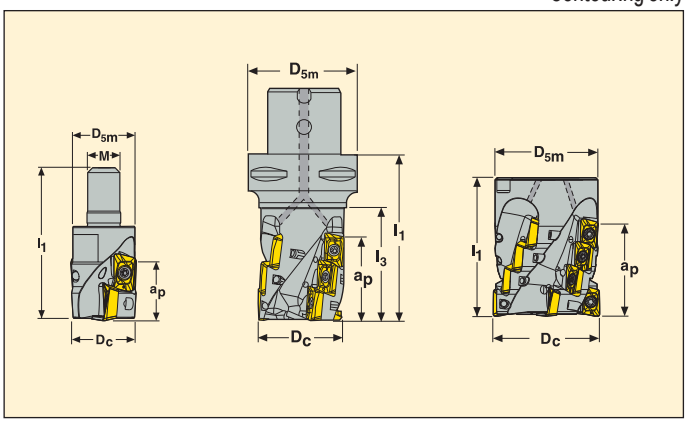

- For insert selection and cutting data recommendations, see page(s) 94–95
- For complete insert programme, see page(s) 640
- For helical interpolation, see page(s) 682-683

Part No.	Type of mounting	Dimensions in mm							α° max	Z_c*		KG		Insert
		a_p	D_c	D_{5m}	dm_m	M	l_1	l_3						
R217.69 -1632.RE-034-10.4A	Combimaster	34	32	30	–	M16	50	–	2	4	16	0,3	20800	XO.X10T3..**
R217.69 -2040.RE-034-10.5A	Combimaster	34	40	36,5	–	M20	55	–	1,5	5	20	0,4	18600	XO.X10T3..**
R220.69 -00040-034-10.5A	Arbor	34	40	35	16	–	55	–	1,5	5	20	0,3	18600	XO.X10T3..**
C4-R217.69 -044-058-10.5A	Seco-Capto	58	44	40	–	–	90	70	1,0	5	35	0,7	16600	XO.X10T3..**
R220.69 -00050-042-10.6A	Arbor	42	50	48	27	–	65	–	1,2	6	30	0,5	16600	XO.X10T3..**
C5-R217.69 -054-066-10.6A	Seco-Capto	66	54	50	–	–	98	78	1,0	6	48	1,3	16600	XO.X10T3..**

*Effective number of flutes
Ramping angle = α°.

For Combimaster shanks and dimensions, see pages 572-581 MN2015 Milling
**Maxi corner radii 1,6mm can be used in front row insert

Spare Parts

For cutter	Insert screw	Insert key	Arbor screw
R217.69-..	C02506-T07P	T07P-3	–
R220.69-00040	C02506-T07P	T07P-3	950D0850
Cx-R217.69-..	C02506-T07P	T07P-3	–
R220.69-00050	C02506-T07P	T07P-3	MC6S12X60

Please check availability in current price and stock-list
Torque value 0,9 Nm, Torque keys, see page 690

R217/220.69-10 – Insert selection

SMG		f_z		
		100%	30%	10%
P1	XOMX10T308TR-ME07 F40M	0,090	0,10	0,15
P2	XOMX10T308TR-ME07 F40M	0,090	0,10	0,15
P3	XOMX10T308TR-ME07 MP2500	0,085	0,095	0,15
P4	XOMX10T308TR-M09 MP2500	0,095	0,10	0,16
P5	XOMX10T308TR-M09 MP2500	0,095	0,10	0,16
P6	XOMX10T308TR-M09 MP2500	0,095	0,10	0,16
P7	XOMX10T308TR-M09 MP2500	0,095	0,10	0,16
P8	XOMX10T308TR-M09 MP2500	0,095	0,11	0,16
P11	XOMX10T308TR-M09 MP3000	0,095	0,10	0,16
M1	XOEX10T308R-M06 F40M	0,070	0,075	0,12
M2	XOEX10T308R-M06 F40M	0,060	0,070	0,10
M3	XOEX10T308R-M06 F40M	0,050	0,055	0,085
M4	XOEX10T308R-M06 T350M	0,044	0,048	0,075
M5	XOEX10T308R-M06 T350M	0,044	0,048	0,075
K1	XOMX10T308TR-M09 MK2050	0,10	0,11	0,17
K2	XOMX10T308TR-M09 MK2050	0,095	0,10	0,16
K3	XOMX10T308TR-M09 MK2050	0,095	0,10	0,16
K4	XOMX10T308TR-M09 MK2050	0,095	0,10	0,16
K5	XOMX10T308TR-M09 MK2050	0,085	0,090	0,14
K6	XOMX10T308TR-M09 MK2050	0,095	0,10	0,16
K7	XOMX10T308TR-M09 MK2050	0,085	0,090	0,14
N1	XOEX10T308FR-E05 H15	0,085	0,095	0,15
N2	XOEX10T308FR-E05 H15	0,085	0,095	0,15
N3	XOEX10T308FR-E05 H15	0,085	0,095	0,15
N11	XOEX10T308FR-E05 H15	0,085	0,095	0,15
S1	XOEX10T308R-M06 F40M	0,044	0,048	0,075
S2	XOEX10T308R-M06 F40M	0,044	0,048	0,075
S3	XOEX10T308R-M06 F40M	0,040	0,044	0,070
S11	XOEX10T308R-M06 MS2050	0,050	0,055	0,085
S12	XOEX10T308R-M06 MS2050	0,050	0,055	0,085
S13	XOEX10T308R-M06 MS2050	0,044	0,048	0,075
H5	XOMX10T308TR-M09 MP1500	0,065	0,070	0,11
H11	XOMX10T308TR-M09 MP1500	0,065	0,070	0,11
H12	XOMX10T308TR-M09 MP1500	0,065	0,070	0,11

SMG = Seco material group
f_z = mm/tooth
v_c= m/min
a_e/D_c = %
All cutting data are start values

R217/220.69-10 – Cutting data v_c = (m/min)

	MP1500			MP2500			MP3000			T350M			F40M			MK1500		
SMG	100%	30%	10%	100%	30%	10%	100%	30%	10%	100%	30%	10%	100%	30%	10%	100%	30%	10%
P1	160	175	190	155	170	180	150	165	175	145	160	170	135	155	165	—	—	—
P2	160	175	185	150	170	180	150	165	175	145	160	170	135	150	160	—	—	—
P3	150	165	175	145	160	170	140	155	165	135	150	160	125	145	155	—	—	—
P4	145	160	170	135	150	165	135	150	160	130	145	155	120	135	145	—	—	—
P5	140	160	170	135	150	160	130	145	155	125	140	150	115	135	145	—	—	—
P6	150	165	175	140	155	165	140	155	165	135	150	160	125	140	150	—	—	—
P7	145	160	170	140	155	165	135	150	160	130	145	155	120	135	145	—	—	—
P8	140	155	165	135	150	160	130	145	155	125	140	150	115	135	145	—	—	—
P11	145	160	170	135	150	160	135	150	160	130	145	155	120	135	145	—	—	—
M1	—	—	—	130	150	160	130	150	160	130	145	155	120	140	150	—	—	—
M2	—	—	—	120	135	145	120	135	145	115	135	145	110	125	135	—	—	—
M3	—	—	—	110	125	135	105	125	135	105	120	130	100	115	125	—	—	—
M4	—	—	—	90	110	120	90	105	115	85	105	115	80	100	110	—	—	—
M5	—	—	—	80	100	105	80	95	105	75	95	105	70	90	95	—	—	—
K1	145	160	170	140	155	165	135	150	160	130	145	155	120	140	150	155	170	180
K2	140	155	165	130	145	155	125	145	155	120	140	150	115	130	140	145	165	175
K3	130	145	155	120	135	145	115	135	145	110	130	140	105	120	130	135	155	165
K4	125	140	150	115	135	145	115	130	140	110	125	135	100	120	130	135	150	160
K5	95	110	120	90	105	115	85	100	110	80	95	105	70	90	95	105	120	130
K6	115	135	145	110	125	135	105	125	135	100	120	130	95	110	120	125	145	155
K7	110	125	135	105	120	130	100	115	125	95	110	120	85	105	110	120	135	145
N1	—	—	—	215	235	245	215	230	240	—	—	—	200	215	225	—	—	—
N2	—	—	—	205	220	230	200	215	225	—	—	—	185	205	215	—	—	—
N3	—	—	—	180	195	205	175	190	205	—	—	—	160	180	190	—	—	—
N11	—	—	—	185	205	215	185	200	210	—	—	—	170	185	195	—	—	—
S1	—	—	—	49	65	75	47	60	70	44	60	70	40	55	60	—	—	—
S2	—	—	—	40	55	60	38	50	60	36	47	55	32	43	50	—	—	—
S3	—	—	—	35	46	55	33	44	50	31	41	49	28	38	44	—	—	—
S11	—	—	—	70	85	95	65	80	90	65	80	90	55	75	85	—	—	—
S12	—	—	—	40	55	65	38	50	60	36	47	55	33	43	50	—	—	—
S13	—	—	—	32	42	49	30	40	47	29	38	44	26	34	40	—	—	—
H5	50	65	75	41	55	65	40	55	60	39	50	60	34	45	50	—	—	—
H11	65	80	90	55	70	80	50	65	75	50	65	75	44	60	65	—	—	—
H12	95	110	120	80	95	105	80	95	105	80	95	105	70	85	95	—	—	—

R217/220.69-10 – Cutting data v_c = (m/min)

	MK2050			MM4500			MS2050			MS2500			H15		
SMG	100%	30%	10%	100%	30%	10%	100%	30%	10%	100%	30%	10%	100%	30%	10%
P1	150	165	175	125	140	150	130	140	140	160	175	185	—	—	—
P2	145	165	175	125	140	150	130	135	135	160	175	185	—	—	—
P3	140	155	165	115	130	140	120	125	125	150	165	175	—	—	—
P4	130	150	155	105	125	135	110	115	120	140	160	170	—	—	—
P5	130	145	155	105	120	130	105	115	110	140	155	165	—	—	—
P6	135	150	160	110	130	140	115	115	120	150	165	175	—	—	—
P7	130	150	160	110	125	135	110	115	115	145	160	170	—	—	—
P8	130	145	155	105	120	130	110	115	115	140	155	165	—	—	—
P11	130	145	155	105	125	135	110	110	115	140	160	170	—	—	—
M1	—	—	—	115	130	140	120	130	130	140	155	165	—	—	—
M2	—	—	—	100	120	130	105	110	110	125	145	155	—	—	—
M3	—	—	—	90	105	115	80	85	85	115	130	140	—	—	—
M4	—	—	—	75	90	100	55	60	60	100	115	125	—	—	—
M5	—	—	—	60	80	90	47	48	50	85	105	110	—	—	—
K1	150	170	180	—	—	—	130	135	135	145	160	170	—	—	—
K2	145	160	170	—	—	—	115	125	125	140	155	165	—	—	—
K3	135	150	160	—	—	—	105	115	115	125	145	155	—	—	—
K4	130	150	155	—	—	—	105	110	110	125	140	150	—	—	—
K5	100	120	130	—	—	—	70	75	75	95	110	120	—	—	—
K6	125	140	150	—	—	—	95	105	105	115	135	145	—	—	—
K7	115	135	145	—	—	—	85	90	90	110	125	135	—	—	—
N1	—	—	—	—	—	—	—	—	—	—	—	—	200	220	225
N2	—	—	—	—	—	—	—	—	—	—	—	—	190	205	215
N3	—	—	—	—	—	—	—	—	—	—	—	—	165	180	190
N11	—	—	—	—	—	—	—	—	—	—	—	—	170	190	200
S1	—	—	—	23	30	35	49	60	65	55	70	80	—	—	—
S2	—	—	—	18	24	28	39	48	55	44	60	65	—	—	—
S3	—	—	—	16	21	25	35	42	46	39	50	60	—	—	—
S11	—	—	—	32	42	50	70	80	85	75	90	100	—	—	—
S12	—	—	—	25	32	38	50	65	70	44	60	70	—	—	—
S13	—	—	—	20	26	30	42	50	55	35	47	55	—	—	—
H5	—	—	—	—	—	—	—	—	—	45	60	70	—	—	—
H11	—	—	—	—	—	—	—	—	—	55	75	85	—	—	—
H12	—	—	—	—	—	—	—	—	—	85	100	110	—	—	—

Turbo 12 – R217.69-12

Slotting and contouring

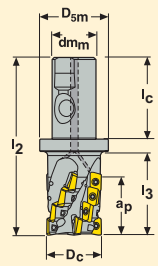

- For insert selection and cutting data recommendations, see page(s) 101–102
- For complete insert programme, see page(s) 641
- For helical interpolation, see page(s) 682-683

Part No.	Type of mounting	Dimensions in mm a_p	D_c	dm_m	D_{5m}	l_2	l_3	l_c	α° max	Z_c*		KG		Insert
R217.69 -2025.3S-022-12.2AN	Seco-Weldon	22	25	20	35	99,5	38	50	5,0	2	4	0,3	20800	XO.X12..**
-2525.3S-033-12.2AN	Seco-Weldon	33	25	25	40	115,5	43	56	5,0	2	6	0,4	20800	XO.X12..**
R217.69 -2532.3S-033-12.2AN	Seco-Weldon	33	32	25	40	115,5	47	56	3,0	2	6	0,5	18400	XO.X12..***
-2532.3S-033-12.3AN	Seco-Weldon	33	32	25	40	115,5	48	56	3,0	3	9	0,5	18400	XO.X12..**
R217.69 -3240.3S-033-12.3AN	Seco-Weldon	33	40	32	50	119,5	49	60	2,5	3	9	0,8	16400	XO.X12..***

*Effective number of flutes
Ramping angle = α°

**Maxi corner radii 1,6mm can be used in front row insert
***All corner radii can be used in front row insert, modification of the body needed for radii > 2,0mm

Spare Parts

For cutter	Insert screw	Insert key
Dia 25	C03507-T10P	T10P-3
Dia 32	C03508-T10P	T10P-3
Dia 40	C03509-T10P	T10P-3

Please check availability in current price and stock-list
Torque value 2,0 Nm, Torque keys, see page 690

Turbo 12 – R217/220.69-12

Slotting and contouring

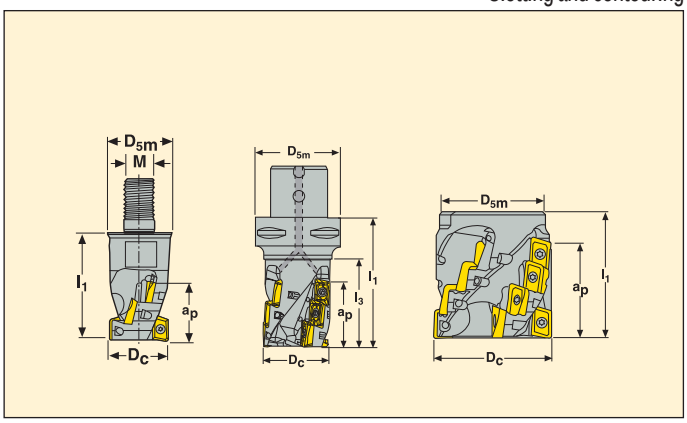

- For insert selection and cutting data recommendations, see page(s) 101–102
- For complete insert programme, see page(s) 641
- For helical interpolation, see page(s) 682-683

Part No.	Type of mounting	Dimensions in mm a_p	D_c	D_{5m}	dm_m	M	l_1	l_3	α° max	Z_c*		KG		Insert
R217.69 -1225.RE-022-12.2AN	Combimaster	22	25	23	–	M12	40	–	3	2	4	0,1	20800	XO.X12..**
R217.69 -1632.RE-022-12.3AN	Combimaster	22	32	30	–	M16	40	–	2	3	6	0,2	18400	XO.X12..**
R217.69 -2040.RE-033-12.3AN	Combimaster	33	40	36,5	–	M20	50	–	2,5	3	9	0,4	16400	XO.X12..***
C4-R217.69 -044-033-12.3AN	Seco-Capto	33	44	40	–	–	68	48	2,0	3	9	0,6	15500	XO.X12..***
R220.69 -00050-033-12.4AN	Arbor	33	50	48	27	–	55	–	2	4	12	0,4	14800	XO.X12..***
-00050-044-12.4AN	Arbor	44	50	48	27	–	65	–	2	4	16	0,5	14800	XO.X12..***
C5-R217.69 -054-044-12.4AN	Seco-Capto	44	54	50	–	–	79	59	1,5	4	16	1,2	13900	XO.X12..***
R220.69 -00063-033-12.5AN	Arbor	33	63	62	27	–	63	–	1,5	5	15	1,0	13200	XO.X12..***
C6-R217.69 -066-044-12.5AN	Seco-Capto	44	66	63	–	–	81	59	1,0	5	20	1,9	12000	XO.X12..***

*Effective number of flutes
Ramping angle = α°.

Spare Parts

For cutter	Insert screw	Insert key	Arbor screw
217.69-..Ø25	C03507-T10P	T10P-3	–
217.69-..Ø32-40	C03508-T10P	T10P-3	–
Cx217.69-..Ø40-66	C03509-T10P	T10P-3	–
R220.69-00050	C03509-T10P	T10P-3	MC6S12X40
R220.69-00063	C03509-T10P	T10P-3	MC6S12X50

Please check availability in current price and stock-list
Torque value 2,0 Nm, Torque keys, see page 690

For Combimaster shanks and dimensions, see pages 588-598

Turbo 12 – R217.69-12

Contouring only

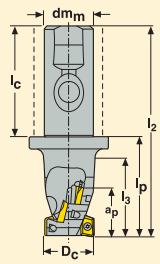

- For insert selection and cutting data recommendations, see page(s) 101–102
- For complete insert programme, see page(s) 641
- For helical interpolation, see page(s) 682-683

Part No.	Type of mounting	Dimensions in mm a_p	D_c	dm_m	D_{5m}	l_2	l_3	l_c	α° max	Z_c*		KG		Insert
R217.69 -2532.3S-044-12.3AN	Seco-Weldon	44	32	25	40	125,5	58	56	3,0	3	12	0,5	18400	XO.X12..**
R217.69 -3240.3S-044-12.4AN	Seco-Weldon	44	40	32	50	129,5	57	60	2,5	4	16	0,8	16400	XO.X12..**
-3240.3S-055-12.3AN	Seco-Weldon	55	40	32	50	139,5	69	60	2,5	3	15	0,9	16400	XO.X12..***
R217.69 -3250.3S-055-12.4AN	Seco-Weldon	55	50	32	50	139,5	67	60	2,0	4	20	1,1	14800	XO.X12..***

*Effective number of flutes
Ramping angle = α°

**All corner radii can be used in front row insert, modification of the body needed for radii > 3,1 mm
***Maxi corner radii 1,6mm can be used in front row insert

Spare Parts

For cutter	Insert screw	Insert key
Dia 32	C03508-T10P	T10P-3
Dia 40-50	C03509-T10P	T10P-3

Please check availability in current price and stock-list
Torque value 2,0 Nm, Torque keys, see page 690

Turbo 12 – R217/220.69-12

Contouring only

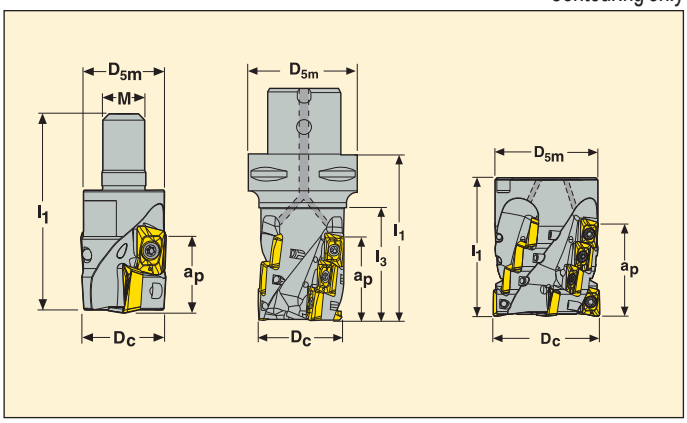

- For insert selection and cutting data recommendations, see page(s) 101–102
- For complete insert programme, see page(s) 641
- For helical interpolation, see page(s) 682-683

Part No.	Type of mounting	Dimensions in mm a_p	D_c	D_{5m}	dm_m	M	l_1	l_3	α° max	Z_c*		KG		Insert
C5-R217.69 -032-044-12.3AN	Seco-Capto	44	32	50	–	–	79	56	3,0	3	12	0,7	18400	XO.X12..**
-032-055-12.3AN	Seco-Capto	55	32	50	–	–	90	67	3,0	3	15	0,7	18400	XO.X12..**
C6-R217.69 -040-055-12.3AN	Seco-Capto	55	40	63	–	–	92	67	2,5	3	15	1,1	16400	XO.X12..***
-040-066-12.3AN	Seco-Capto	65,5	40	63	–	–	103	79,9	2,5	3	18	1,2	16400	XO.X12..***
R217.69 -2040.RE-044-12.4AN	Combimaster	44	40	36,5	–	M20	61	–	2,5	4	16	0,4	16400	XO.X12..***
R220.69 -00050-044-12.5AN	Arbor	44	50	48	27	–	65	–	2	5	20	0,5	14800	XO.X12..***
C6-R217.69 -050-055-12.4AN	Seco-Capto	55	50	63	–	–	92	67	2,0	4	20	1,4	14800	XO.X12..**
R220.69 -00063-055-12.5AN	Arbor	55	63	60	27	–	75	–	1,5	5	25	1,0	13200	XO.X12..***
R220.69 -00080-064-12.6AN	Arbor	64	80	77	32	–	85	–	1	6	36	2,0	7000	XO.X12..***

*Effective number of flutes
Ramping angle = α°.

**Maxi corner radii 1,6mm can be used in front row insert
***All corner radii can be used in front row insert, modification of the body needed for radii > 3,1 mm

Spare Parts

For cutter	Insert screw	Insert key	Arbor screw
C5-R217.69-032	C03508-T10P	T10P-3	–
C6-R217.69-040	C03509-T10P	T10P-3	–
R217.69-..Ø40	C03509-T10P	T10P-3	–
R220.69-00050	C03509-T10P	T10P-3	MC6S12X50
C6-R217.69-Ø50	C03509-T10P	T10P-3	–
R220.69-00063	C03509-T10P	T10P-3	MC6S12X60
R220.69-00080	C03509-T10P	T10P-3	MP6S16X80

Please check availability in current price and stock-list
Torque value 2,0 Nm, Torque keys, see page 690

Turbo 12 – R217/220.69-12

Contouring only

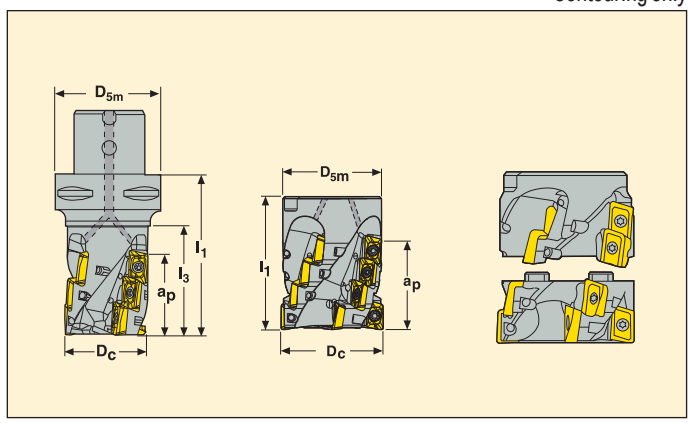

- For insert selection and cutting data recommendations, see page(s) 101–102
- For complete insert programme, see page(s) 641
- For helical interpolation, see page(s) 682-683

Part No.	Type of mounting	Dimensions in mm a_p	D_c	D_{5m}	dm_m	l_1	l_3	α° max	Z_c*		KG		Insert
C6-R217.69 -050-066-12.4SAN	Seco-Capto	66	50	63	–	101	76	2,0	4	24	1,4	14800	XO.X12..***
-050-086-12.5SAN	Seco-Capto	86	50	63	–	119	97	2,0	5	40	1,7	14800	XO.X12..***
-050-106-12.5SAN	Seco-Capto	106	50	63	–	140	118	2,0	5	50	1,7	12000	XO.X12..***
R220.69 -00063-077-12.4SAN	Arbor	77	63	60	27	100	–	1,5	4	28	1,5	13200	XO.X12..***
C6-R217.69 -063-107-12.5SAN	Seco-Capto	107	63	63	–	140	118	1,5	5	50	2,4	12000	XO.X12..***
C8-R217.69 -080-107-12.6SAN	Seco-Capto	107	80	80	–	150	120	1,0	6	60	4,8	12000	XO.X12..***

*Effective number of flutes
Ramping angle = α°

**Maxi corner radii 1,6mm can be used in front row insert
***All corner radii can be used in front row insert, modification of the body needed for radii > 3,1 mm

Spare Parts

For cutter	Replaceable end	Insert screw	Insert key	Arbor screw
	–			
C6-R1217.69-dia 50-12.4SAN	R220.69-RE050022-12.4AN	C03509-T10P	T10P-3	MC6S10X40
C6-R217.69-050-12.5SAN	R220.69-RE050022-12.5AN	C03509-T10P	T10P-3	MC6S10X40
C6-R217.69-050-5SAN	R220.69-RE050022-12.5AN	C03509-T10P	T10P-3	MC6S10X40
R220.69-00063-12.4SAN	R220.69-RE063033-12.4AN	C03509-T10P	T10P-3	MP6S12X80
C6-R217.69-063-12.5SAN	R220.69-RE063033-12.5AN	C03509-T10P	T10P-3	MC6S10X40
C8-R217.69-080-12.6SAN	R220.69-RE080033-12.6AN	C03509-T10P	T10P-3	MC6S16X40

Please check availability in current price and stock-list
Torque value 2,0 Nm, Torque keys, see page 690

R217/220.69-12 – Insert selection

SMG		f_z		
		100%	30%	10%
P1	XOMX120408TR-ME08 F40M	0,12	0,13	0,20
P2	XOMX120408TR-ME08 F40M	0,12	0,13	0,20
P3	XOMX120408TR-ME08 MP2500	0,12	0,13	0,19
P4	XOMX120408TR-M12 MP2500	0,14	0,15	0,22
P5	XOMX120408TR-M12 MP2500	0,13	0,15	0,22
P6	XOMX120408TR-M12 MP2500	0,13	0,15	0,22
P7	XOMX120408TR-M12 MP2500	0,13	0,15	0,22
P8	XOMX120408TR-M12 MP2500	0,14	0,15	0,24
P11	XOMX120408TR-M12 T350M	0,13	0,15	0,22
M1	XOEX120408R-M07 F40M	0,10	0,11	0,16
M2	XOEX120408R-M07 F40M	0,090	0,10	0,15
M3	XOEX120408R-M07 F40M	0,070	0,080	0,12
M4	XOEX120408R-M07 T350M	0,065	0,070	0,10
M5	XOEX120408R-M07 T350M	0,065	0,070	0,10
K1	XOMX120408TR-M12 MK2050	0,15	0,16	0,24
K2	XOMX120408TR-M12 MK2050	0,13	0,15	0,22
K3	XOMX120408TR-M12 MK2050	0,13	0,15	0,22
K4	XOMX120408TR-M12 MK2050	0,13	0,15	0,22
K5	XOMX120408TR-MD13 MK2050	0,13	0,14	0,22
K6	XOMX120408TR-MD13 MK2050	0,15	0,16	0,24
K7	XOMX120408TR-MD13 MK2050	0,13	0,14	0,22
N1	XOEX120408FR-E06 H15	0,11	0,12	0,18
N2	XOEX120408R-M07 MP3000	0,13	0,14	0,22
N3	XOEX120408R-M07 MP3000	0,13	0,14	0,22
N11	XOEX120408FR-E06 H15	0,11	0,12	0,18
S1	XOEX120408R-M07 F40M	0,065	0,070	0,10
S2	XOEX120408R-M07 F40M	0,065	0,070	0,10
S3	XOEX120408R-M07 F40M	0,060	0,065	0,095
S11	XOEX120408R-M07 MS2050	0,070	0,080	0,12
S12	XOEX120408R-M07 MS2050	0,070	0,080	0,12
S13	XOEX120408R-M07 MS2050	0,065	0,070	0,10
H5	XOMX120408TR-MD13 MP1500	0,10	0,11	0,17
H11	XOMX120412TR-MD13 MP3000	0,10	0,11	0,17
H12	XOMX120408TR-MD13 MP1500	0,10	0,11	0,17

SMG = Seco material group
f_z = mm/tooth
v_c= m/min
a_e/D_c = %
All cutting data are start values

R217/220.69-12 – Cutting data v_c = (m/min)

	MP1500			MP2500			MP3000			T350M			F40M			MK1500		
SMG	100%	30%	10%	100%	30%	10%	100%	30%	10%	100%	30%	10%	100%	30%	10%	100%	30%	10%
P1	160	175	190	150	170	180	145	165	175	140	160	170	130	150	160	—	—	—
P2	155	175	185	150	165	175	145	165	175	140	160	170	130	150	160	—	—	—
P3	145	165	175	140	160	170	135	155	165	130	150	160	120	140	150	—	—	—
P4	140	160	170	130	150	160	125	145	155	120	140	150	110	130	140	—	—	—
P5	135	155	165	130	145	160	125	145	155	120	135	150	110	130	140	—	—	—
P6	145	165	175	135	155	165	135	150	165	130	145	160	120	135	150	—	—	—
P7	140	160	170	135	150	165	130	150	160	125	145	155	115	135	145	—	—	—
P8	135	155	165	130	145	155	125	145	155	120	135	150	110	130	140	—	—	—
P11	140	160	170	130	150	160	125	145	155	120	140	150	115	130	145	—	—	—
M1	—	—	—	125	145	155	125	145	155	120	140	150	115	135	145	—	—	—
M2	—	—	—	115	130	145	115	130	145	110	125	140	105	120	135	—	—	—
M3	—	—	—	100	120	130	100	115	130	95	115	125	90	105	120	—	—	—
M4	—	—	—	85	100	110	80	100	110	80	95	110	70	90	100	—	—	—
M5	—	—	—	70	90	100	70	90	100	65	85	95	60	80	90	—	—	—
K1	140	160	170	130	150	160	130	150	160	125	140	155	115	135	145	155	175	185
K2	135	150	165	125	145	155	120	140	150	115	135	145	105	125	135	150	165	180
K3	125	140	155	115	130	145	110	130	140	105	125	135	95	115	125	140	155	170
K4	120	135	150	110	130	140	110	125	140	100	120	130	95	110	125	135	150	165
K5	85	105	115	80	95	110	75	95	105	70	90	100	60	80	90	100	120	130
K6	110	130	140	105	120	135	100	115	130	95	110	125	85	100	115	125	145	155
K7	105	120	130	95	115	125	90	110	120	85	105	115	75	95	105	120	135	145
N1	—	—	—	220	240	250	215	235	245	—	—	—	200	220	230	—	—	—
N2	—	—	—	205	225	235	200	220	230	—	—	—	185	205	215	—	—	—
N3	—	—	—	180	195	210	175	195	205	—	—	—	160	180	190	—	—	—
N11	—	—	—	185	205	215	185	200	215	—	—	—	170	190	200	—	—	—
S1	—	—	—	42	55	65	39	50	60	37	49	55	34	45	50	—	—	—
S2	—	—	—	34	44	50	32	42	49	30	40	46	27	36	42	—	—	—
S3	—	—	—	29	39	45	28	37	43	26	35	41	24	32	37	—	—	—
S11	—	—	—	60	75	85	55	70	85	50	70	80	47	60	75	—	—	—
S12	—	—	—	33	44	50	31	42	49	30	40	46	27	36	42	—	—	—
S13	—	—	—	27	36	42	25	34	39	24	32	37	22	29	34	—	—	—
H5	42	55	65	34	45	55	33	44	50	33	43	50	28	37	44	—	—	—
H11	55	70	85	44	55	70	42	55	65	42	55	65	36	48	55	—	—	—
H12	85	105	115	70	90	100	70	85	100	65	85	95	60	75	90	—	—	—

R217/220.69-12 – Cutting data v_c = (m/min)

	MK2050			MM4500			MS2050			MS2500			H15		
SMG	100%	30%	10%	100%	30%	10%	100%	30%	10%	100%	30%	10%	100%	30%	10%
P1	150	170	180	125	145	155	150	155	160	170	185	200	—	—	—
P2	145	165	175	125	145	155	145	155	160	165	185	195	—	—	—
P3	140	155	170	115	135	145	135	145	145	155	175	185	—	—	—
P4	130	150	160	105	125	135	125	135	140	150	165	180	—	—	—
P5	130	145	160	105	125	135	125	130	135	145	165	175	—	—	—
P6	135	155	165	110	130	140	130	140	145	155	175	185	—	—	—
P7	130	150	160	110	125	140	125	135	140	150	170	180	—	—	—
P8	125	145	155	105	120	135	125	135	135	145	165	175	—	—	—
P11	130	150	160	105	125	135	125	135	140	150	165	180	—	—	—
M1	—	—	—	115	135	145	135	145	150	145	160	175	—	—	—
M2	—	—	—	100	120	130	120	130	135	130	150	160	—	—	—
M3	—	—	—	85	105	115	95	105	105	115	135	145	—	—	—
M4	—	—	—	70	90	100	75	80	80	100	120	130	—	—	—
M5	—	—	—	60	75	85	60	65	65	85	105	115	—	—	—
K1	150	170	180	—	—	—	145	155	160	150	170	180	—	—	—
K2	145	165	175	—	—	—	135	145	150	140	160	170	—	—	—
K3	135	150	165	—	—	—	125	135	135	130	150	160	—	—	—
K4	130	150	160	—	—	—	120	130	135	130	145	160	—	—	—
K5	100	115	125	—	—	—	85	90	95	95	115	125	—	—	—
K6	120	140	155	—	—	—	115	120	125	120	140	150	—	—	—
K7	115	135	145	—	—	—	100	110	115	110	130	140	—	—	—
N1	—	—	—	—	—	—	—	—	—	—	—	—	215	235	245
N2	—	—	—	—	—	—	—	—	—	—	—	—	200	220	230
N3	—	—	—	—	—	—	—	—	—	—	—	—	175	195	205
N11	—	—	—	—	—	—	—	—	—	—	—	—	185	200	215
S1	—	—	—	21	28	33	45	55	65	55	70	80	—	—	—
S2	—	—	—	17	23	27	37	46	55	43	55	65	—	—	—
S3	—	—	—	15	20	24	33	41	46	38	50	60	—	—	—
S11	—	—	—	30	40	47	65	75	85	75	95	105	—	—	—
S12	—	—	—	23	31	36	49	60	70	43	55	65	—	—	—
S13	—	—	—	18	24	29	39	49	55	34	45	55	—	—	—
H5	—	—	—	—	—	—	—	—	—	44	60	65	—	—	—
H11	—	—	—	—	—	—	—	—	—	55	75	85	—	—	—
H12	—	—	—	—	—	—	—	—	—	85	105	115	—	—	—

Turbo 18 – R217.69-18

Slotting and contouring

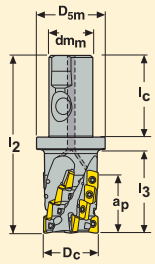

- For insert selection and cutting data recommendations, see page(s) 106–107
- For complete insert programme, see page(s) 642
- For helical interpolation, see page(s) 682-683

Part No.	Type of mounting	Dimensions in mm							α° max	Z_c*		KG		Insert
		a_p	D_c	D_{5m}	dm_m	l_2	l_3	l_c						
R217.69 -3240.3S-047-18.2AN	Seco-Weldon	47	40	50	32	130	57	60	4,5	2	6	0,8	9900	XO.X18..**
-3250.3S-047-18.3AN	Seco-Weldon	47	50	50	32	134,5	65	60	3,0	3	9	1,1	8900	XO.X18..**

*Effective number of flutes
Ramping angle = α°

**All corner radii can be used in front row insert, modification of the body needed for radii > 3,1 mm

Spare Parts

For cutter	Insert screw	Insert key
R217.69-..	C04510-T20P	T20P-3

Please check availability in current price and stock-list
Torque value 5,0 Nm, Torque keys, see page 690

Turbo 18 – R217/220.69-18

Slotting and contouring

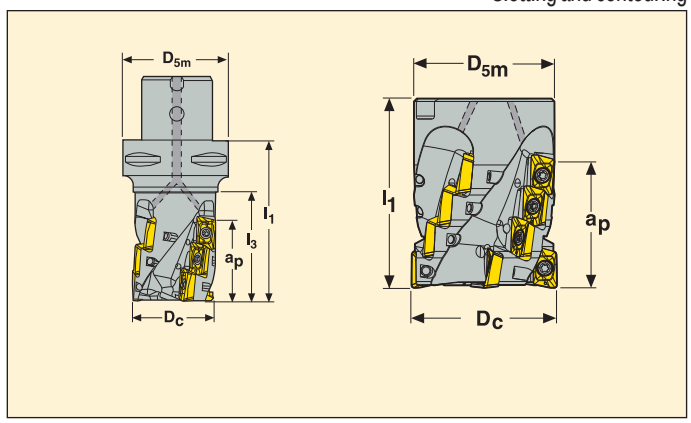

- For insert selection and cutting data recommendations, see page(s) 106–107
- For complete insert programme, see page(s) 642
- For helical interpolation, see page(s) 682-683

Part No.	Type of mounting	Dimensions in mm a_p	D_c	D_{5m}	dm_m	l_1	l_3	α° max	Z_c*		KG		Insert
C5-R217.69 -040-047-18.2AN	Seco-Capto	47	40	50	–	82	58	4,5	2	6	0,8	9900	XO.X18..**
C6-R217.69 -050-062-18.3AN	Seco-Capto	62	50	63	–	99	73	3,0	3	12	1,5	8900	XO.X18..**
C5-R217.69 -054-047-18.3AN	Seco-Capto	47	54	50	–	82	62	2,5	3	9	1,1	8600	XO.X18..**
R220.69 -00063-047-18.4AN	Arbor	47	63	60	27	70	–	2,4	4	12	0,8	7900	XO.X18..**
R220.69 -00063-062-18.3AN	Arbor	62	63	60	27	85	–	2,4	3	12	1,1	7900	XO.X18..**
-00063-062-18.4AN	Arbor	62	63	60	27	85	–	2,4	4	16	1,0	7900	XO.X18..**
C6-R217.69 -066-047-18.4AN	Seco-Capto	47	66	63	–	84	62	2,0	4	12	1,7	7700	XO.X18..**
R220.69 -00080-047-18.5AN	Arbor	47	80	77	32	70	–	1,55	5	15	1,6	7000	XO.X18..**
R220.69 -00080-062-18.5AN	Arbor	62	80	77	32	85	–	1,55	5	20	1,9	7000	XO.X18..**
-00100-062-18.6AN	Arbor	62	100	90	40	85	–	1,3	6	24	3,1	6300	XO.X18..**

*Effective number of flutes
Ramping angle = α°

**All corner radii can be used in front row insert, modification of the body needed for radii > 3,1 mm

Spare Parts

For cutter	Insert screw	Insert key	Arbor screw
C5-C6-R217.69-..	C04510-T20P	T20P-3	–
R220.69-00063	C04510-T20P	T20P-4	MC6S12X60
R220.69-00080	C04510-T20P	T20P-4	MC6S16X70
R220.69-00100	C04510-T20P	T20P-4	MC6S20X70

Please check availability in current price and stock-list
Torque value 5,0 Nm, Torque keys, see page 690

Turbo 18 – R217/220.69-18

Contouring only

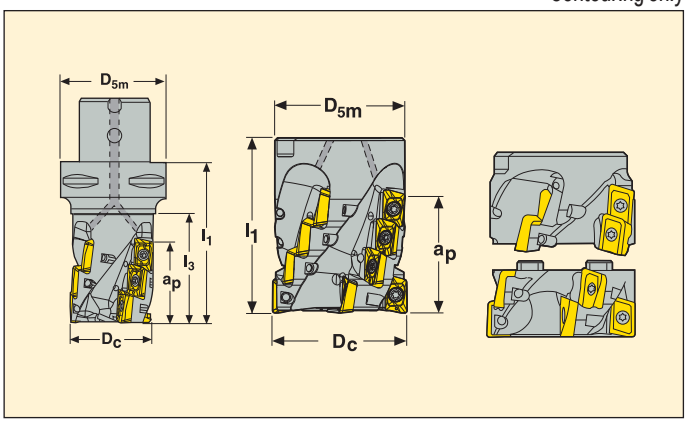

- For insert selection and cutting data recommendations, see page(s) 106–107
- For complete insert programme, see page(s) 642
- For helical interpolation, see page(s) 682-683

Part No.	Type of mounting	Dimensions in mm						α° max	Z_c*		KG		Insert
		a_p	D_c	D_{5m}	dm_m	l_1	l_3						
C6-R217.69 -050-077-18.2SAN	Seco-Capto	77	50	63	–	114	89	3,0	2	10	1,7	8900	XO.X18..**
R220.69 -00063-077-18.4SAN	Arbor	77	63	60	27	100	–	2,4	4	20	1,3	7900	XO.X18..**
C8-R217.69 -063-093-18.4SAN	Seco-Capto	93	63	80	–	140	110	2,0	4	24	3,1	7900	XO.X18..**
R220.69 -00080-077-18.4SAN	Arbor	77	80	77	32	100	–	1,55	4	20	2,4	7000	XO.X18..**
C8-R217.69 -080-093-18.5SAN	Seco-Capto	93	80	80	–	140	110	1,5	5	30	4,2	7000	XO.X18..**
R220.69 -00100-077-18.5SAN	Arbor	77	100	90	40	100	–	1,3	5	25	4,0	6300	XO.X18..**

*Effective number of flutes
Ramping angle = α°

**All corner radii can be used in front row insert, modification of the body needed for radii > 3,1 mm

Spare Parts

For cutter	Replaceable end	Insert screw	Insert key	Arbor screw
	–			
C6-R217.69-050	R220.69-RE050031-18.2AN	C04510-T20P	T20P-3	MC6S10X40
R220.69-00063	R220.69-RE063031-18.4AN	C04510-T20P	T20P-4	MP6S12X80
C8-R217.69-063	R220.69-RE063031-18.4AN	C04510-T20P	T20P-3	MC6S12X50
R220.69-00080	R220.69-RE080031-18.4AN	C04510-T20P	T20P-4	MP6S16X80
C8-R217.69-080	R220.69-RE080031-18.5AN	C04510-T20P	T20P-3	MC6S16X40
R220.69-00100	R220.69-RE100031-18.5AN	C04510-T20P	T20P-4	MP6S20X80

Please check availability in current price and stock-list
Torque value 5,0 Nm, Torque keys, see page 690

R217/220.69-18 – Insert selection

SMG		f_z		
		100%	30%	10%
P1	XOMX180608TR-ME13 F40M	0,15	0,16	0,24
P2	XOMX180608TR-ME13 F40M	0,15	0,16	0,24
P3	XOMX180608TR-ME13 MP2500	0,14	0,15	0,24
P4	XOMX180608TR-M14 MP2500	0,15	0,16	0,24
P5	XOMX180608TR-M14 MP2500	0,15	0,16	0,24
P6	XOMX180608TR-M14 MP2500	0,14	0,16	0,24
P7	XOMX180608TR-M14 MP2500	0,14	0,16	0,24
P8	XOMX180608TR-M14 MP2500	0,15	0,17	0,26
P11	XOMX180608TR-M14 T350M	0,14	0,16	0,24
M1	XOMX180608TR-M14 F40M	0,16	0,17	0,26
M2	XOMX180608TR-M14 F40M	0,15	0,16	0,24
M3	XOMX180608TR-M14 F40M	0,12	0,13	0,19
M4	XOMX180608TR-M14 T350M	0,10	0,11	0,17
M5	XOMX180608TR-M14 T350M	0,10	0,11	0,17
K1	XOMX180608TR-M14 MK2050	0,16	0,17	0,26
K2	XOMX180608TR-M14 MK2050	0,15	0,16	0,24
K3	XOMX180608TR-M14 MK2050	0,15	0,16	0,24
K4	XOMX180608TR-M14 MK2050	0,15	0,16	0,24
K5	XOMX180608TR-M14 MK2050	0,13	0,14	0,22
K6	XOMX180608TR-M14 MK2050	0,15	0,16	0,24
K7	XOMX180608TR-M14 MK2050	0,13	0,14	0,22
N1	XOEX180608FR-E10 H25	0,15	0,16	0,24
N2	XOMX180608R-M10 F30M	0,15	0,16	0,24
N3	XOMX180608R-M10 F30M	0,15	0,16	0,24
N11	XOEX180608FR-E10 H25	0,15	0,16	0,24
S1	XOMX180608R-M10 F40M	0,075	0,080	0,12
S2	XOMX180608R-M10 F40M	0,075	0,080	0,12
S3	XOMX180608R-M10 F40M	0,070	0,075	0,11
S11	XOMX180608R-M10 MS2050	0,085	0,090	0,14
S12	XOMX180608R-M10 MS2050	0,085	0,090	0,14
S13	XOMX180608R-M10 MS2050	0,075	0,080	0,12
H5	XOMX180608TR-MD15 MP1500	0,11	0,12	0,18
H11	XOMX180608TR-MD15 MP1500	0,11	0,12	0,18

SMG = Seco material group
f_z = mm/tooth
v_c= m/min
a_e/D_c = %
All cutting data are start values

R217/220.69-18 – Cutting data v_c = (m/min)

	MP1500			MP2500			MP3000			T350M			F30M			F40M		
SMG	100%	30%	10%	100%	30%	10%	100%	30%	10%	100%	30%	10%	100%	30%	10%	100%	30%	10%
P1	150	165	175	140	160	170	140	155	165	135	150	160	135	155	165	125	140	155
P2	145	165	175	140	155	170	135	155	165	130	150	160	135	150	160	125	140	150
P3	140	155	165	130	150	160	130	145	155	125	140	150	125	145	155	115	130	140
P4	130	150	160	125	140	150	120	140	150	115	135	145	120	135	145	110	125	135
P5	130	145	155	120	140	150	120	135	145	115	130	140	115	135	145	105	120	135
P6	135	155	165	130	145	155	125	145	155	120	140	150	125	140	150	115	130	140
P7	135	150	160	125	145	155	125	140	150	120	135	145	120	135	145	110	125	135
P8	130	145	155	120	140	150	120	135	145	115	130	140	115	130	145	105	120	130
P11	130	150	160	125	140	150	120	140	150	115	135	145	120	135	145	110	125	135
M1	—	—	—	120	140	150	120	135	145	115	135	145	120	140	150	110	130	140
M2	—	—	—	110	125	135	105	125	135	105	120	130	110	125	135	100	115	125
M3	—	—	—	95	115	125	95	110	125	90	110	120	95	115	125	85	105	115
M4	—	—	—	80	100	110	80	100	110	80	95	105	80	100	110	70	90	100
M5	—	—	—	70	90	100	70	85	95	65	85	95	70	90	100	60	80	90
K1	135	150	160	125	145	155	125	140	150	120	135	145	120	140	145	110	125	135
K2	125	145	155	120	135	145	115	135	145	110	130	140	115	130	140	100	120	130
K3	115	135	145	110	125	135	105	125	135	100	120	130	105	120	130	90	110	120
K4	115	130	140	105	125	135	100	120	130	95	115	125	100	120	130	90	105	115
K5	85	100	110	75	95	105	75	90	100	70	85	95	70	90	95	60	80	85
K6	105	125	135	100	115	125	95	110	125	90	105	120	95	110	120	80	100	110
K7	100	115	125	90	110	120	90	105	115	85	100	110	85	105	110	75	90	100
N1	—	—	—	205	220	230	200	220	230	—	—	—	200	215	225	190	205	215
N2	—	—	—	190	210	220	190	205	215	—	—	—	185	205	215	175	190	200
N3	—	—	—	165	185	195	165	180	190	—	—	—	160	180	190	150	165	180
N11	—	—	—	175	190	200	170	190	200	—	—	—	170	185	195	160	175	185
S1	—	—	—	42	55	65	40	50	60	38	50	60	40	55	65	34	45	55
S2	—	—	—	34	45	55	32	42	50	30	40	47	32	43	50	28	36	43
S3	—	—	—	30	40	46	28	37	44	26	35	41	28	37	44	24	32	38
S11	—	—	—	60	75	85	55	70	80	50	70	80	55	75	85	47	60	75
S12	—	—	—	33	44	55	31	42	50	30	40	47	32	43	50	27	36	43
S13	—	—	—	27	36	42	26	34	40	24	32	38	26	34	41	22	29	34
H5	42	55	65	34	45	55	33	44	50	33	43	50	34	45	50	28	38	44
H11	55	70	80	44	60	70	43	55	65	42	55	65	43	60	65	37	48	55

R217/220.69-18 – Cutting data v_c = (m/min)

	MK1500			MK2050			MM4500			MS2050			H25		
SMG	100%	30%	10%	100%	30%	10%	100%	30%	10%	100%	30%	10%	100%	30%	10%
P1	—	—	—	140	160	170	115	135	145	140	150	160	—	—	—
P2	—	—	—	140	155	165	115	135	145	140	150	155	—	—	—
P3	—	—	—	130	150	160	110	125	135	130	140	145	—	—	—
P4	—	—	—	125	140	150	100	120	125	125	135	140	—	—	—
P5	—	—	—	120	140	150	100	115	125	120	130	135	—	—	—
P6	—	—	—	130	145	155	105	120	135	125	135	140	—	—	—
P7	—	—	—	125	140	150	100	120	130	125	135	140	—	—	—
P8	—	—	—	120	135	145	100	115	125	120	130	135	—	—	—
P11	—	—	—	125	140	150	100	115	130	120	130	135	—	—	—
M1	—	—	—	—	—	—	105	125	135	130	140	150	—	—	—
M2	—	—	—	—	—	—	95	110	125	120	130	135	—	—	—
M3	—	—	—	—	—	—	85	100	110	100	110	110	—	—	—
M4	—	—	—	—	—	—	70	85	95	80	85	90	—	—	—
M5	—	—	—	—	—	—	55	75	85	70	75	80	—	—	—
K1	145	165	175	145	160	170	—	—	—	140	150	155	—	—	—
K2	140	155	165	135	155	165	—	—	—	130	140	145	—	—	—
K3	130	145	155	125	145	155	—	—	—	120	130	135	—	—	—
K4	125	145	155	125	140	150	—	—	—	120	130	135	—	—	—
K5	100	115	125	95	110	120	—	—	—	85	95	100	—	—	—
K6	120	135	145	115	135	145	—	—	—	110	120	125	—	—	—
K7	115	130	140	110	125	135	—	—	—	100	110	115	—	—	—
N1	—	—	—	—	—	—	—	—	—	—	—	—	195	215	225
N2	—	—	—	—	—	—	—	—	—	—	—	—	185	200	210
N3	—	—	—	—	—	—	—	—	—	—	—	—	160	175	185
N11	—	—	—	—	—	—	—	—	—	—	—	—	165	185	195
S1	—	—	—	—	—	—	21	28	33	41	55	60	—	—	—
S2	—	—	—	—	—	—	17	23	26	33	43	50	—	—	—
S3	—	—	—	—	—	—	15	20	23	30	38	44	—	—	—
S11	—	—	—	—	—	—	29	39	46	55	70	80	—	—	—
S12	—	—	—	—	—	—	22	30	35	43	55	65	—	—	—
S13	—	—	—	—	—	—	18	24	28	35	46	55	—	—	—
H5	—	—	—	—	—	—	—	—	—	—	—	—	—	—	—
H11	—	—	—	—	—	—	—	—	—	—	—	—	—	—	—

R217.94-08

Slotting and contouring

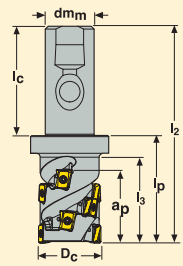

- For insert selection and cutting data recommendations, see page(s) 112-113
- For complete insert programme, see page(s) 607

Part No.	Type of mounting	Dimensions in mm a_p	D_c	dm_m	l_2	l_3	l_p	l_c	Z_c*		KG		Insert
R217.94 -2025.3S-029-08.2A	Seco-Weldon	29	25	20	100	44	50	50	2	8	0,3	20800	LOEX08..**
-2025.3S-036-08.2A	Seco-Weldon	36	25	20	100	44	50	50	2	10	0,3	20800	LOEX08..**
R217.94 -2532.3S-029-08.2A	Seco-Weldon	29	32	25	111	45	55	56	2	8	0,5	18400	LOEX08..**
-2532.3S-036-08.2A	Seco-Weldon	36	32	25	111	45	55	56	2	10	0,5	18400	LOEX08..**
R217.94 -3240.3S-036-08.3A	Seco-Weldon	36	40	32	115	45	55	60	3	15	0,8	16400	LOEX08..**

*Effective number of flutes

**All corner radii can be used in front row insert

Spare Parts

For cutter	Insert screw	Insert key
R217.94-08	C02708-T08P	T08P-3

Please check availability in current price and stock-list

Torque value 1,2 Nm, Torque keys, see page 690

R217/220.94-08

Slotting and contouring

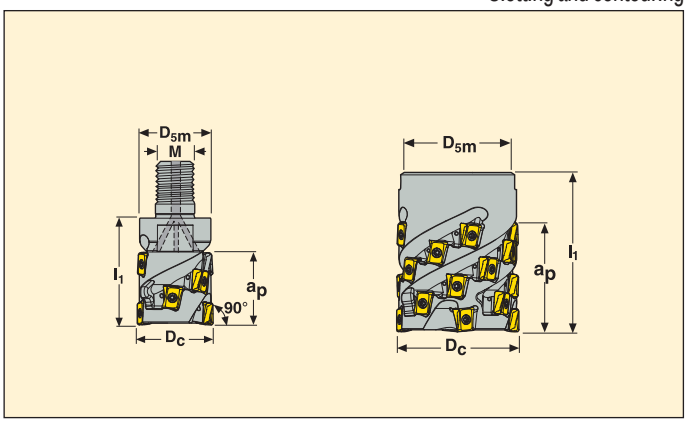

- For insert selection and cutting data recommendations, see page(s) 112-113
- For complete insert programme, see page(s) 607

Part No.	Type of mounting	Dimensions in mm a_p	D_c	D_{5m}	dm_m	M	l_1	Z_c*		KG		Insert
R217.94 -1225.RE-022-08.2A	Combimaster	22	25	23	–	M12	35	2	6	0,1	20800	LOEX08..**
R217.94 -1632.RE-029-08.2A	Combimaster	29	32	30	–	M16	45	2	8	0,2	18400	LOEX08..**
R217.94 -2040.RE-036-08.3A	Combimaster	36	40	36,5	–	M20	55	3	15	0,4	16400	LOEX08..**
R220.94 -00050-043-08.4A	Arbor	43	50	48	27	–	65	4	24	0,6	14800	LOEX08..**

*Effective number of flutes. Spigot size = dm_m

**All corner radii can be used in front row insert

Spare Parts

For cutter	Insert screw	Insert key
R217.94-..	C02708-T08P	T08P-3

Please check availability in current price and stock-list

Torque value 1,2 Nm, Torque keys, see page 690

For Combimaster shanks and dimensions, see pages 588-598

R217.94-08

Slotting and contouring

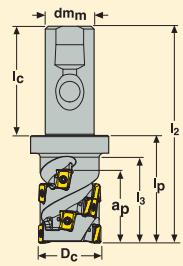

- For insert selection and cutting data recommendations, see page(s) 112-113
- For complete insert programme, see page(s) 607

Part No.	Type of mounting	Dimensions in mm							Z_c*		KG		Insert
		a_p	D_c	dm_m	l_2	l_3	l_p	l_c					
R217.94 -2025.3S-043-08.2A	Seco-Weldon	43	25	20	105	49	55	50	2	12	0,3	20800	LOEX08..**
R217.94 -2532.3S-043-08.3A	Seco-Weldon	43	32	25	121	55	65	56	3	18	0,5	18400	LOEX08..**
-2532.3S-050-08.3A	Seco-Weldon	50	32	25	125	59	69	56	3	21	0,5	18400	LOEX08..**
R217.94 -3240.3S-050-08.4A	Seco-Weldon	50	40	32	130	60	70	60	4	28	0,9	16400	LOEX08..**

*Effective number of flutes

**All corner radii can be used in front row insert

Spare Parts

For cutter	Insert screw	Insert key
R217.94-08	C02708-T08P	T08P-3

Please check availability in current price and stock-list

Torque value 1,2 Nm, Torque keys, see page 690

R217/220.94-08

Contouring only

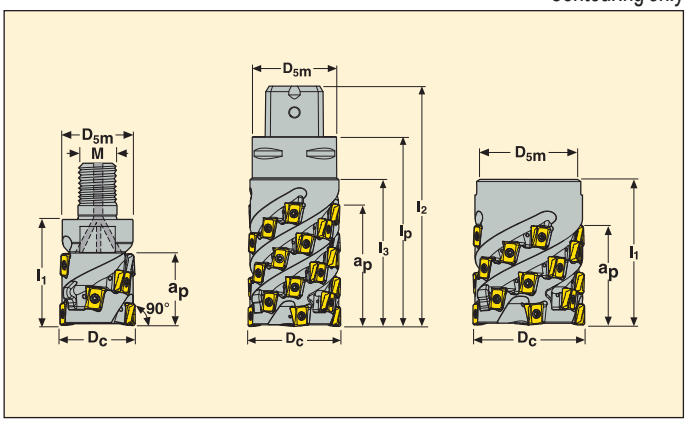

- For insert selection and cutting data recommendations, see page(s) 112-113
- For complete insert programme, see page(s)) 607

Part No.	Type of mounting	Dimensions in mm									Z_c*		KG		Insert
		a_p	D_c	D_{5m}	dm_m	M	l_1	l_2	l_3	l_p					
R217.94 -1225.RE-029-08.2A	Combimaster	29	25	23	–	M12	40	–	–	–	2	8	0,1	20800	LOEX08..**
R217.94 -1632.RE-036-08.3A	Combimaster	36	32	30	–	M16	55	–	–	–	3	15	0,3	18400	LOEX08..**
R217.94 -2040.RE-043-08.4A	Combimaster	43	40	36,5	–	M20	60	–	–	–	4	24	0,45	16400	LOEX08..**
C4-R217.94 -044-057-08.4A	Seco-Capto	57	44	40	–	–	90	114	70	–	4	32	0,8	15500	LOEX08..**
R220.94 -00050-057-08.5A	Arbor	57	50	48	27	–	70	–	–	–	5	40	0,6	14800	LOEX08..**
C5-R217.94 -054-064-08.5A	Seco-Capto	64	54	50	–	–	78	128	98	–	5	45	1,4	14800	LOEX08..**

*Effective number of flutes. Spigot size = dm_m

**All corner radii can be used in front row insert

Spare Parts

For cutter	Insert screw	Insert key
R217.94-..	C02708-T08P	T08P-3
Cx-R217.94-08	C02708-T08P	T08P-3

Please check availability in current price and stock-list

Torque value 1,2 Nm, Torque keys, see page 690

For Combimaster shanks and dimensions, see pages 588-598

R217/220.94-08 – Insert selection

SMG		f_z		
		100%	30%	10%
P1	LOEX080408TR-M08 F40M	0,090	0,10	0,15
P2	LOEX080408TR-M08 F40M	0,090	0,10	0,15
P3	LOEX080408TR-M08 F40M	0,085	0,095	0,15
P4	LOEX080408TR-M08 F40M	0,085	0,095	0,14
P5	LOEX080408TR-M08 F40M	0,085	0,090	0,14
P6	LOEX080408TR-M08 F40M	0,085	0,090	0,14
P7	LOEX080408TR-M08 F40M	0,085	0,090	0,14
P8	LOEX080408TR-M08 F40M	0,085	0,095	0,15
P11	LOEX080408TR-M08 F40M	0,085	0,090	0,14
M1	LOEX080408TR-M08 F40M	0,090	0,10	0,15
M2	LOEX080408TR-M08 F40M	0,085	0,090	0,14
M3	LOEX080408TR-M08 F40M	0,065	0,075	0,11
M4	LOEX080408TR-M08 F40M	0,060	0,065	0,10
M5	LOEX080408TR-M08 F40M	0,060	0,065	0,10
K1	LOEX080408TR-MD08 MK2050	0,090	0,10	0,15
K2	LOEX080408TR-MD08 MK2050	0,085	0,090	0,14
K3	LOEX080408TR-MD08 MK2050	0,085	0,090	0,14
K4	LOEX080408TR-MD08 MK2050	0,085	0,090	0,14
K5	LOEX080408TR-MD08 MK2050	0,075	0,080	0,13
K6	LOEX080408TR-MD08 MK2050	0,085	0,090	0,14
K7	LOEX080408TR-MD08 MK2050	0,075	0,080	0,13
S1	LOEX080408TR-M08 F40M	0,060	0,065	0,10
S2	LOEX080408TR-M08 F40M	0,060	0,065	0,10
S3	LOEX080408TR-M08 F40M	0,055	0,060	0,090
S11	LOEX080408TR-M08 MS2050	0,065	0,075	0,11
S12	LOEX080408TR-M08 MS2050	0,065	0,075	0,11
S13	LOEX080408TR-M08 MS2050	0,060	0,065	0,10

SMG = Seco material group
f_z = mm/tooth
v_c= m/min
a_e/D_c = %
All cutting data are start values

R217/220.94-08 – Cutting data v_c = (m/min)

	MP3000			F40M			MK2050			MS2050		
SMG	100%	30%	10%	100%	30%	10%	100%	30%	10%	100%	30%	10%
P1	165	185	195	150	170	180	170	185	200	155	165	170
P2	165	180	195	150	165	180	165	185	195	155	160	165
P3	155	175	185	140	160	170	160	175	185	140	150	155
P4	145	165	175	130	150	160	150	165	180	135	145	145
P5	145	160	175	130	150	160	145	165	175	130	140	140
P6	150	170	180	135	155	165	155	175	185	140	145	150
P7	150	165	175	135	150	160	150	170	180	135	140	145
P8	145	160	170	130	145	155	145	165	175	130	140	145
P11	145	165	175	130	150	160	150	165	180	130	140	145
M1	145	165	175	135	155	165	—	—	—	145	155	155
M2	130	150	160	120	140	150	—	—	—	130	135	140
M3	120	135	145	110	125	135	—	—	—	100	110	110
M4	100	120	130	90	110	120	—	—	—	80	85	90
M5	90	105	115	80	95	105	—	—	—	65	70	75
K1	150	165	180	135	150	165	170	190	200	155	165	165
K2	140	160	170	125	145	155	165	180	195	145	150	155
K3	130	150	160	115	135	145	150	170	180	130	140	145
K4	125	145	155	110	130	140	150	170	180	130	135	140
K5	95	110	120	80	95	105	115	135	145	90	100	105
K6	120	135	145	105	120	130	140	160	170	120	130	130
K7	110	130	140	95	115	125	135	150	160	105	115	120
S1	50	70	80	44	60	70	—	—	—	50	65	70
S2	42	55	65	36	47	55	—	—	—	41	50	60
S3	36	48	55	31	41	48	—	—	—	37	45	50
S11	75	90	100	65	80	90	—	—	—	70	85	95
S12	42	55	65	36	47	55	—	—	—	55	65	75
S13	33	44	50	29	38	44	—	—	—	44	55	60

Helical T4 – R217/220.94-12

Slotting and contouring

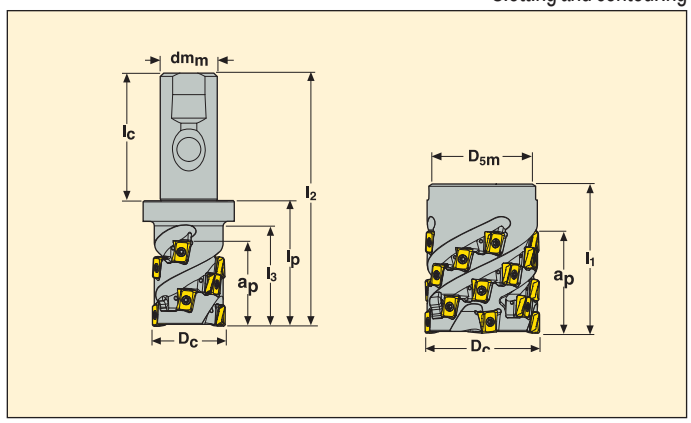

- For insert selection and cutting data recommendations, see page(s) 116-117
- For complete insert programme, see page(s) [XXX]

Part No.	Type of mounting	Dimensions in mm									Z_c*		KG		Insert
		a_p	D_c	D_{5m}	dm_m	l_1	l_2	l_3	l_p	l_c					
R217.94 -3250.3S-035-12.3A	Seco/Weldon	35	50	50	32	60	120	51	60	60	3	9	1,0	9900	LOEX12..**
R220.94 -00050-046-12.3A	Arbor	46	50	46	27	70	–	–	–	–	3	12	0,5	9900	LOEX12..**
-00063-046-12.4A	Arbor	46	63	60	27	65	–	–	–	–	4	16	0,9	8800	LOEX12..**

*Effective number of flutes

**All corner radii can be used in front row, modification of body needed for radii >3,1mm

Spare Parts

For cutter	Replacement blade	Key (T-handle)	Insert screw	Insert key	Arbor screw
R217.94-..	H6B-T15P	DOUBLE-T	C04012-T15P	T15P-3	
R220.94-00050-00063	H6B-T15P	DOUBLE-T	C04012-T15P	T15P-3	MC6S12X60

Please check availability in current price and stock-list

Torque value 3,0 Nm, Torque keys, see page 690

Helical T4 – R217/220.94-12

Contouring only

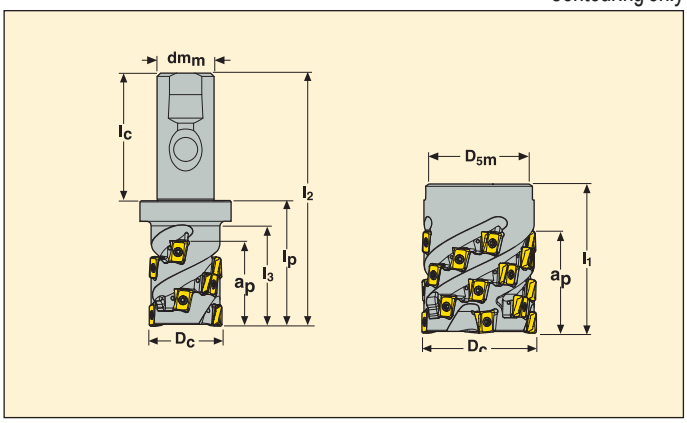

- For insert selection and cutting data recommendations, see page(s) 116-117
- For complete insert programme, see page(s) [XXX]

Part No.	Type of mounting	Dimensions in mm a_p	D_c	D_{5m}	dm_m	l_1	l_2	l_3	l_p	l_c	Z_c*		KG		Insert
R217.94 -3250.3S-058-12.4A	Seco/Weldon	58	50	50	32	75	135	66	75	60	4	20	1,1	9900	LOEX12..**
R220.94 -00050-058-12.4A	Arbor	58	50	46	27	80	–	–	–	–	4	20	0,6	9900	LOEX12..**
-00063-058-12.5A	Arbor	58	63	60	27	75	–	–	–	–	5	25	1,1	8800	LOEX12..**
-00063-081-12.4A	Arbor	81	63	60	27	93	–	–	–	–	4	28	1,3	8800	LOEX12..**
-00080-069-12.5A	Arbor	69	80	77	32	90	–	–	–	–	5	30	2,2	7800	LOEX12..**
-00100-081-12.6A	Arbor	81	100	97	40	93	–	–	–	–	6	42	3,7	7000	LOEX12..**

*Effective number of flutes
Spigot size = dm_m

**All corner radii can be used in front row, modification of body needed for radii >3,1mm

Spare Parts

For cutter	Replacement blade	Key (T-handle)	Insert screw	Insert key	Arbor screw
R217.94-..	H6B-T15P	DOUBLE-T	C04012-T15P	T15P-3	
R220.94-00050-00063.5A	H6B-T15P	DOUBLE-T	C04012-T15P	T15P-3	MC6S12X70
R220.94-00063.4A	H6B-T15P	DOUBLE-T	C04012-T15P	T15P-3	MP6S12X80
R220.94-00080	H6B-T15P	DOUBLE-T	C04012-T15P	T15P-3	MP6S16X80
R220.94-00100	H6B-T15P	DOUBLE-T	C04012-T15P	T15P-3	MP6S20X80

Please check availability in current price and stock-list
Torque value 3,0 Nm, Torque keys, see page 690

R217/220.94-12 – Insert selection

SMG		f_z		
		100%	30%	10%
P1	LOEX120708TR-M12 F40M	0,15	0,16	0,24
P2	LOEX120708TR-M12 F40M	0,15	0,16	0,24
P3	LOEX120708TR-M12 F40M	0,14	0,15	0,24
P4	LOEX120708TR-M12 F40M	0,14	0,15	0,24
P5	LOEX120708TR-M12 MP2500	0,14	0,15	0,22
P6	LOEX120708TR-M12 MP2500	0,13	0,15	0,22
P7	LOEX120708TR-M12 MP2500	0,13	0,15	0,22
P8	LOEX120708TR-M12 MP2500	0,14	0,15	0,24
P11	LOEX120708TR-M12 T350M	0,13	0,15	0,22
M1	LOEX120708TR-M12 F40M	0,15	0,16	0,24
M2	LOEX120708TR-M12 F40M	0,14	0,15	0,22
M3	LOEX120708TR-M12 F40M	0,11	0,12	0,18
M4	LOEX120708TR-M12 F40M	0,095	0,10	0,16
M5	LOEX120708TR-M12 F40M	0,095	0,10	0,16
K1	LOEX120708TR-MD13 MK2050	0,16	0,17	0,26
K2	LOEX120708TR-MD13 MK2050	0,15	0,16	0,24
K3	LOEX120708TR-MD13 MK2050	0,15	0,16	0,24
K4	LOEX120708TR-MD13 MK2050	0,15	0,16	0,24
K5	LOEX120708TR-MD13 MK2050	0,13	0,14	0,22
K6	LOEX120708TR-MD13 MK2050	0,15	0,16	0,24
K7	LOEX120708TR-MD13 MK2050	0,13	0,14	0,22
S1	LOEX120708TR-M12 F40M	0,095	0,10	0,16
S2	LOEX120708TR-M12 F40M	0,095	0,10	0,16
S3	LOEX120708TR-M12 F40M	0,090	0,095	0,15
S11	LOEX120708TR-M12 MS2050	0,11	0,12	0,18
S12	LOEX120708TR-M12 MS2050	0,11	0,12	0,18
S13	LOEX120708TR-M12 MS2050	0,095	0,10	0,16

SMG = Seco material group
f_z = mm/tooth
v_c= m/min
a_e/D_c = %
All cutting data are start values

R217/220.94-12 – Cutting data v_c = (m/min)

	MP1500			MP2500			MP3000			T350M			F40M		
SMG	100%	30%	10%	100%	30%	10%	100%	30%	10%	100%	30%	10%	100%	30%	10%
P1	160	180	190	155	175	190	155	175	185	150	165	180	140	160	170
P2	160	180	190	155	175	185	150	170	185	145	165	175	135	155	170
P3	150	170	180	145	165	175	145	160	175	135	155	165	130	145	160
P4	140	160	175	140	155	170	135	155	165	130	150	160	120	140	150
P5	140	160	170	135	155	165	130	150	165	125	145	155	115	135	150
P6	150	165	180	145	160	175	140	160	170	135	155	165	125	145	155
P7	145	160	175	140	160	170	135	155	165	130	150	160	120	140	150
P8	140	155	170	135	155	165	130	150	160	125	145	155	115	135	145
P11	145	160	170	140	155	170	135	150	165	130	145	160	120	140	150
M1	—	—	—	135	155	165	130	150	165	130	150	160	120	140	155
M2	—	—	—	120	140	150	120	140	150	115	135	145	110	130	140
M3	—	—	—	105	125	135	105	125	135	100	120	135	95	115	125
M4	—	—	—	90	110	120	90	110	120	85	105	115	80	100	110
M5	—	—	—	80	100	110	75	95	105	75	95	105	70	85	95
K1	145	165	175	140	160	170	135	155	165	—	—	—	120	140	150
K2	135	155	165	130	150	165	130	145	160	—	—	—	115	130	145
K3	125	145	155	120	140	150	115	135	150	—	—	—	100	120	135
K4	120	140	155	115	135	150	115	135	145	—	—	—	100	120	130
K5	90	110	120	85	105	115	80	100	110	—	—	—	65	85	95
K6	115	130	145	110	130	140	105	125	135	—	—	—	90	110	120
K7	105	125	135	100	120	130	100	115	130	—	—	—	85	105	115
S1	—	—	—	—	—	—	44	60	70	42	55	65	38	50	60
S2	—	—	—	—	—	—	35	47	55	34	45	50	30	41	47
S3	—	—	—	—	—	—	31	41	48	29	39	46	27	36	41
S11	—	—	—	—	—	—	60	80	90	60	75	85	50	70	80
S12	—	—	—	—	—	—	35	47	55	33	44	50	30	40	48
S13	—	—	—	—	—	—	28	38	44	27	36	42	24	33	38

R217/220.94-12 – Cutting data v_c = (m/min)

	MK1500			MK2050			MM4500			MS2050		
SMG	100%	30%	10%	100%	30%	10%	100%	30%	10%	100%	30%	10%
P1	—	—	—	150	170	185	125	145	155	—	—	—
P2	—	—	—	150	170	180	125	140	155	—	—	—
P3	—	—	—	140	160	170	115	135	145	—	—	—
P4	—	—	—	135	155	165	105	125	135	—	—	—
P5	—	—	—	130	150	160	105	120	135	—	—	—
P6	—	—	—	140	155	170	110	130	140	—	—	—
P7	—	—	—	135	155	165	110	125	140	—	—	—
P8	—	—	—	130	150	160	105	120	130	—	—	—
P11	—	—	—	135	150	165	105	125	135	—	—	—
M1	—	—	—	—	—	—	115	130	145	140	155	160
M2	—	—	—	—	—	—	100	120	130	125	140	150
M3	—	—	—	—	—	—	85	105	115	110	120	125
M4	—	—	—	—	—	—	70	90	100	90	100	105
M5	—	—	—	—	—	—	60	75	85	80	85	95
K1	160	180	190	155	175	185	—	—	—	—	—	—
K2	150	170	180	145	165	180	—	—	—	—	—	—
K3	140	160	170	135	155	165	—	—	—	—	—	—
K4	135	155	170	135	150	165	—	—	—	—	—	—
K5	105	125	135	100	120	130	—	—	—	—	—	—
K6	130	150	160	125	145	155	—	—	—	—	—	—
K7	120	140	150	120	135	150	—	—	—	—	—	—
N1	—	—	—	—	—	—	—	—	—	—	—	—
N2	—	—	—	—	—	—	—	—	—	—	—	—
N3	—	—	—	—	—	—	—	—	—	—	—	—
N11	—	—	—	—	—	—	—	—	—	—	—	—
S1	—	—	—	—	—	—	21	29	33	38	50	55
S2	—	—	—	—	—	—	17	23	27	31	41	46
S3	—	—	—	—	—	—	15	20	23	27	36	41
S11	—	—	—	—	—	—	30	39	47	50	65	75
S12	—	—	—	—	—	—	23	30	36	38	50	60
S13	—	—	—	—	—	—	18	25	29	33	43	49

R215.59-12.4 – Half effective

Slotting and contouring

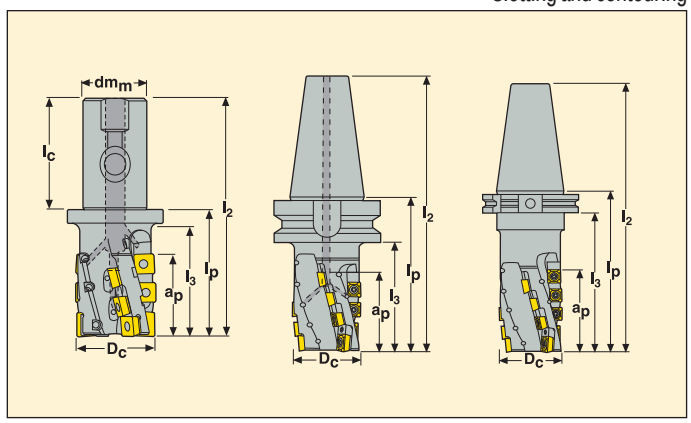

- For insert selection and cutting data recommendations, see page(s) 124-125
- For complete insert programme, see page(s) 601, 617

Part No.	Type of mounting	Dimensions in mm a_p	D_c	dm_m	l_2	l_3	l_p	l_c		Z_c*	KG		No. of inserts SCE.	ACE.
R215.59 -4050.3S-050-12.4A	Seco-Weldon	50	50	40	150	66	80	70	12	2	1,4	8300	10**	2**
-BT50.050.059-12.4A	BT 50	59	50	–	237	97	135	–	14	2	4,5	8300	12**	2**
-CV50050.077-12.4A	CV50-DIN	77	50	–	252	109	150	–	18	2	4,2	8300	16**	2**
R215.59 -CV50063077-12.4	CV50-DIN	77	63	–	252	115	150	–	18	2	4,9	7400	16**	2**

*Effective number of flutes

**All corner radii can be used in front row insert, modification of the body needed for radii >= 3,0mm

Spare Parts

For cutter	Insert screw	Insert key
R215.59-12.4	C45011-T20P	T20P-4

Please check availability in current price and stock-list

Torque value 5,0 Nm, Torque keys, see page 690

R220.59-12 – Half effective

Slotting and contouring

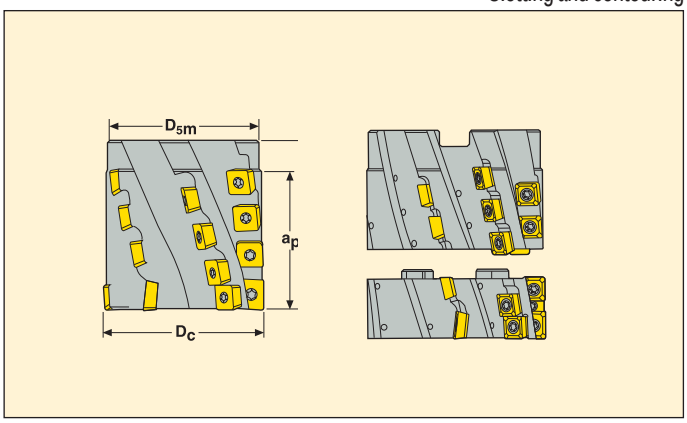

- For insert selection and cutting data recommendations, see page(s) 124-125
- For complete insert programme, see page(s) 601, 617

Part No.	Type of mounting	Dimensions in mm a_p	D_c	D_{5m}	dm_m	l_1		Z_c*	KG		No. of inserts SCE.	ACE.
R220.59 -00063.059-12.4	Arbor	59	63	62	27	70	14	2	0,9	7400	12**	2**
R220.59 -00080.068-12.4	Arbor	68	80	77	32	85	16	2	1,5	6500	14**	2**
-00080.068-12.6	Arbor	68	80	77	32	85	24	3	2,2	6500	21**	3**
R220.59 -00100077-12.6S	Arbor	77	100	90	40	100	27	3	3,7	5800	24**	3**
-00100077-12.8S	Arbor	77	100	90	40	100	36	4	3,9	5800	32**	4**
-00100077-12.8SR6	Arbor	77	100	90	40	100	32	4	4,5	5800	32**	4**

*Effective number of flutes

**All corner radii can be used in front row insert, modification of the body needed for radii >= 3,0mm

Spare Parts

For cutter	Replaceable end	Insert screw	Insert key	Arbor screw
	–		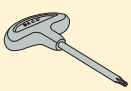	
R220.59-00063	–	C45011-T20P	T20P-4	MC6S12X50
R220.59-00080	–	C45011-T20P	T20P-4	MC6S16X70
R220.59-00100..S	R220.59-RE100034-12.6	C45011-T20P	T20P-4	215.59-693S
R220.59-00100..SR	R220.59-RE100034-12.8R6	C45011-T20P	T20P-4	215.59-693S

Please check availability in current price and stock-list

Torque value 5,0 Nm, Torque keys, see page 690

R215.59-12.4 – Half effective

Contouring only – Long edge

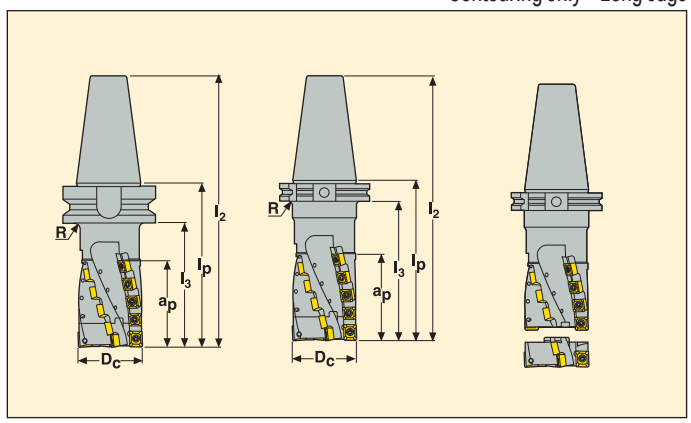

- For insert selection and cutting data recommendations, see page(s) 124-125
- For complete insert programme, see page(s) 601, 617

Part No.	Type of mounting	Dimensions in mm a_p	D_c	l_2	l_3	l_p		Z_c*	KG		No. of inserts SCE.	ACE.	SCEX
R215.59 -BT50.063.086-12.4S	BT 50	86	63	265	125	163	18	2	6,8	7400	18**	2**	–
-BT50.063.086-12.4SR6	BT 50	86	63	265	125	163	18	2	6,5	7400	16**	2**	2
-CV50063086-12.4S	CV50-DIN	86	63	261	120	160	20	2	5,0	7400	18**	2**	–
-CV50063086-12.4SR6	CV50-DIN	86	63	261	120	160	20	2	5,1	7400	16**	2**	2
R215.59 -BT50.080.095-12.4S	BT 50	95	80	275	135	173	22	2	6,6	6500	20**	2**	–
-BT50.080.095-12.4SR6	BT 50	95	80	275	135	173	22	2	6,7	6500	18**	2**	2
-CV50080095-12.4S	CV50-DIN	95	80	252	131	150	22	2	5,5	6500	20**	2**	–
-CV50080095-12.4SR6	CV50-DIN	95	80	252	131	150	22	2	6,5	6500	18**	2**	2
-CV50080095-12.6S	CV50-DIN	95	80	252	131	150	33	3	5,9	6500	30**	3**	–
-CV50080095-12.6SR6	CV50-DIN	95	80	252	131	150	33	3	5,9	6500	27**	3**	3

*Effective number of flutes

**All corner radii can be used in front row insert, modification of the body needed for radii >= 3,0mm

Spare Parts

For cutter	Replaceable end	Insert screw	Insert key	Arbor screw
	–		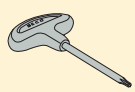	
R220.59-063-12.4S	R220.59-RE063024-12.4	C45011-T20P	T20P-4	215.59-691
R220.59-063-12.4SR	R220.59-RE063024-12.4R6	C45011-T20P	T20P-4	215.59-691
R220.59-080-12.4S	R220.59-RE080034-12.4	C45011-T20P	T20P-4	215.59-692S
R220.59-080-12.4SR	R220.59-RE080034-12.4R6	C45011-T20P	T20P-4	215.59-692S
R220.59-080-12.6S	R220.59-RE080034-12.6	C45011-T20P	T20P-4	215.59-692S
R220.59-080-12.6SR	R220.59-RE080034-12.6R6	C45011-T20P	T20P-4	215.59-692S

Please check availability in current price and stock-list

Torque value 5,0 Nm, Torque keys, see page 690

R215.59-12.4 – Half effective

Contouring only – Extra long edge

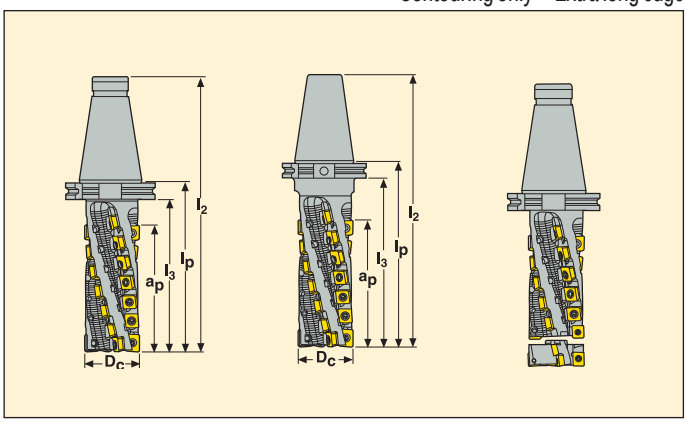

- For insert selection and cutting data recommendations, see page(s) 124-125
- For complete insert programme, see page(s) 601, 617

Part No.	Type of mounting	Dimensions in mm a_p	D_c	l_2	l_3	l_p		Z_c*	KG		No. of inserts SCE.	ACE.	SCEX
R215.59 -50050120-12.4	BT 50	120	50	307	145	180	28	2	4,5	8300	26**	2**	–
-CV50050120-12.4	CV50-DIN	120	50	282	145	180	28	2	4,5	8300	26**	2**	–
R215.59 -50063120-12.4S	BT 50	120	63	327	165	200	28	2	5,6	7400	26**	2**	–
-50063120-12.4SR6	BT 50	120	63	327	165	200	28	2	5,9	7400	24**	2**	2
-CV50063120-12.4S	CV50-DIN	120	63	302	165	200	28	2	5,6	7400	26**	2**	–
-CV50063120-12.4SR6	CV50-DIN	120	63	302	165	200	28	2	5,8	7400	24**	2**	2
-50063160-12.4S	BT 50	160	63	377	200	235	36	2	6,0	7400	34**	2**	–
-50063160-12.4SR6	BT 50	160	63	377	200	235	36	2	6,3	7400	32**	2**	2
-CV50063160-12.4S	CV50-DIN	160	63	352	200	235	36	2	6,2	7400	34**	2**	–
-CV50063160-12.4SR6	CV50-DIN	160	63	352	200	235	36	2	6,2	7400	32**	2**	2

*Effective number of flutes

**All corner radii can be used in front row insert, modification of the body needed for radii >= 3,0mm

Spare Parts

For cutter	Replaceable end	Insert screw	Insert key	Arbor screw
	–		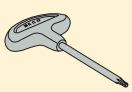	
R215.59-50	–	C45011-T20P	T20P-4	–
R215.59-63-12.4S	R220.59-RE063024-12.4	C45011-T20P	T20P-4	215.59-691
R215.59-63-12.4SR	R220.59-RE063024-12.4R6	C45011-T20P	T20P-4	215.59-691

Please check availability in current price and stock-list

Torque value 5,0 Nm, Torque keys, see page 690

R215.59-12.4..K – Full effective

Contouring only

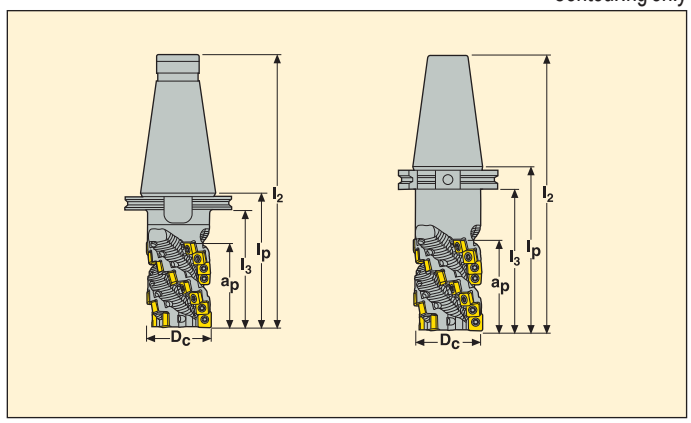

- For insert selection and cutting data recommendations, see page(s) 124-125
- For complete insert programme, see page(s) 601, 617

Part No.	Type of mounting	Dimensions in mm a_p	D_c	l_2	l_3	l_p		Z_c*	KG		No. of inserts SCE.	ACE.
R215.59 -50050072-12.3K	CV50-DIN 69871	72	50	257	85	130	21	3	3,9	8300	18	3**
R215.59 -CV50050072-12.3K	SA50-DIN 2080	72	50	232	85	130	21	3	3,8	8300	18	3**
R215.59 -50063110-12.3K	CV50-DIN 69871	110	63	292	126	165	33	3	5,2	7400	30	3**
-50080120-12.4K	CV50-DIN 69871	120	80	302	155	175	48	4	6,8	6500	44	4**
R215.59 -CV50080120-12.4K	SA50-DIN 2080	120	80	277	155	175	48	4	6,5	6500	44	4**

*Effective number of flutes

**All ACET15.. corner radii can be used in front row insert, modification of the body needed for radii >= 3,0mm

Spare Parts

For cutter	Insert screw	Insert key
R215.59-12.xK	C45011-T20P	T20P-4

Please check availability in current price and stock-list

Torque value 5,0 Nm, Torque keys, see page 690

R220.59-12..K – Full effective

Contouring only

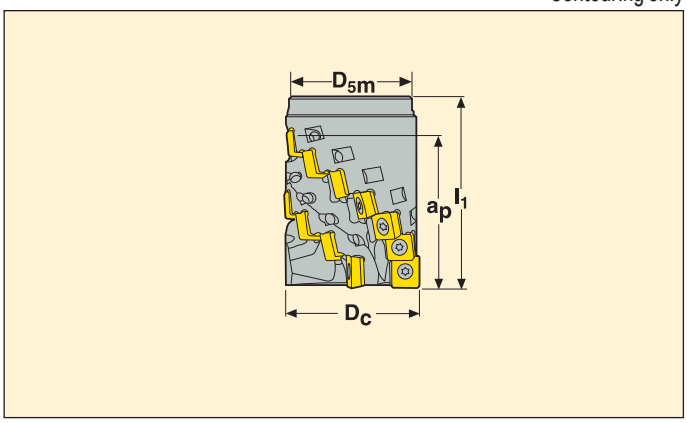

- For insert selection and cutting data recommendations, see page(s) 124-125
- For complete insert programme, see page(s) 601, 617

Part No.	Type of mounting	Dimensions in mm a_p	D_c	D_{5m}	dm_m	l_1		Z_c*	KG		No. of inserts SCE.	ACE.
R220.59 -00063.072-12.4K	Arbor	72	63	62	27	90	28	4	1,2	7400	24	4**
-00080.072-12.5K	Arbor	72	80	74,7	32	100	35	5	2,3	6500	30	5**
-00100.072-12.6K	Arbor	72	100	95,5	40	110	42	6	4,2	5800	36	6**

*Effective number of flutes

**All ACET15.. corner radii can be used in front row insert, modification of the body needed for radii >= 3,0mm

Spare Parts

For cutter	Insert screw	Insert key	Arbor screw
		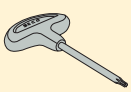	
R220.59-00063	C45011-T20P	T20P-4	MC6S12X80
R220.59-00080	C45011-T20P	T20P-4	MC6S16X80
R220.59-00100	C45011-T20P	T20P-4	MC6S20X80

Please check availability in current price and stock-list

Torque value 5,0 Nm, Torque keys, see page 690

215/220.59-12– Insert selection

SMG			f_z		
			100%	30%	10%
P1	SCET120612T-ME10 F40M	ACET150612TR-ME10 F40M	0,11	0,12	0,19
P2	SCET120612T-ME10 F40M	ACET150612TR-ME10 F40M	0,11	0,12	0,19
P3	SCET120612T-M14 F40M	ACET150612TR-M14 F40M	0,15	0,17	0,26
P4	SCET120612T-M14 MP2500	ACET150612TR-M14 MP2500	0,15	0,16	0,24
P5	SCET120612T-M11 MP2500	ACET150612TR-M11 MP2500	0,11	0,12	0,19
P6	SCET120612T-M11 MP2500	ACET150612TR-M11 MP2500	0,11	0,12	0,19
P7	SCET120612T-M11 MP2500	ACET150612TR-M11 MP2500	0,11	0,12	0,19
P8	SCET120612T-M11 MP2500	ACET150612TR-M11 MP2500	0,12	0,13	0,20
P11	SCMT120612T-M14 T350M	ACMT150612TR-M14 T350M	0,14	0,16	0,24
M1	SCMT120612T-M14 F40M	ACMT150612TR-M14 F40M	0,16	0,18	0,26
M2	SCMT120612T-M14 F40M	ACMT150612TR-M14 F40M	0,15	0,16	0,24
M3	SCMT120612T-M14 F40M	ACMT150612TR-M14 F40M	0,12	0,13	0,20
M4	SCMT120612T-M14 F40M	ACMT150612TR-M14 F40M	0,10	0,11	0,17
M5	SCMT120612T-M14 F40M	ACMT150612TR-M14 F40M	0,10	0,11	0,17
K1	SCET120612T-M14 MK1500	ACET150612TR-M14 MK1500	0,16	0,18	0,26
K2	SCET120612T-M14 MK1500	ACET150612TR-M14 MK1500	0,15	0,16	0,24
K3	SCET120612T-M14 MK1500	ACET150612TR-M14 MK1500	0,15	0,16	0,24
K4	SCET120612T-M14 MK1500	ACET150612TR-M14 MK1500	0,15	0,16	0,24
K5	SCET120612T-M14 MK1500	ACET150612TR-M14 MK1500	0,13	0,14	0,22
K6	SCET120612T-M14 MK1500	ACET150612TR-M14 MK1500	0,15	0,16	0,24
K7	SCET120612T-M14 MK1500	ACET150612TR-M14 MK1500	0,13	0,14	0,22
S1	SCMT120612T-M14 T350M	ACMT150612TR-M14 T350M	0,10	0,11	0,17
S2	SCMT120612T-M14 T350M	ACMT150612TR-M14 T350M	0,10	0,11	0,17
S3	SCMT120612T-M14 T350M	ACMT150612TR-M14 T350M	0,095	0,10	0,16
S11	SCET120612T-M14 MS2050	SCET120612T-M14 MS2050	0,12	0,13	0,20
S12	SCET120612T-M14 MS2050	ACET150612TR-M14 MS2050	0,12	0,13	0,20
S13	SCET120612T-M14 MS2050	ACET150612TR-M14 MS2050	0,10	0,11	0,17
H11	SCMT120612T-M14 T350M	ACMT150612TR-M14 T350M	0,10	0,11	0,17

SMG = Seco material group
f_z = mm/tooth
v_c= m/min
a_e/D_c = %
All cutting data are start values

215/220.59-12 – Cutting data v_c = (m/min)

	MP1500			MP2500			T350M			F40M			MK1500			MS2050		
SMG	100%	30%	10%	100%	30%	10%	100%	30%	10%	100%	30%	10%	100%	30%	10%	100%	30%	10%
P1	125	140	145	120	130	140	115	125	135	110	120	130	—	—	—	115	125	130
P2	125	135	140	120	130	135	110	125	130	105	120	125	—	—	—	110	120	125
P3	120	130	135	115	125	130	105	120	125	100	115	120	—	—	—	105	115	120
P4	110	125	130	105	120	125	100	115	120	95	105	115	—	—	—	100	110	115
P5	110	125	130	105	120	125	100	110	120	95	105	115	—	—	—	100	110	115
P6	115	130	135	110	125	130	105	115	125	100	110	120	—	—	—	105	115	120
P7	115	125	135	110	120	130	105	115	120	95	110	115	—	—	—	100	110	115
P8	110	120	130	105	115	125	100	110	120	95	105	115	—	—	—	100	105	115
P11	115	125	130	105	120	125	100	115	120	95	105	115	—	—	—	100	110	115
M1	—	—	—	105	115	125	100	115	120	95	110	115	—	—	—	105	115	120
M2	—	—	—	95	110	115	95	105	115	90	100	110	—	—	—	100	105	110
M3	—	—	—	85	100	105	85	95	105	80	90	100	—	—	—	90	95	100
M4	—	—	—	75	90	95	75	85	95	70	80	90	—	—	—	75	80	85
M5	—	—	—	70	80	90	65	80	85	60	75	80	—	—	—	65	75	75
K1	115	125	130	110	120	125	100	115	120	95	110	115	120	135	140	110	120	125
K2	110	120	130	105	115	125	100	110	115	90	105	110	115	130	135	105	115	120
K3	100	115	120	95	110	115	90	105	110	85	95	105	110	120	130	100	110	115
K4	100	110	120	95	105	115	90	100	110	85	95	100	105	120	125	100	105	110
K5	80	90	100	75	85	95	70	80	85	60	75	80	85	100	105	75	85	90
K6	95	105	115	90	100	110	85	95	100	75	90	95	100	115	120	90	100	105
K7	90	100	110	85	95	105	80	90	95	70	85	90	95	110	115	85	95	100
S1	—	—	—	45	55	65	41	55	60	37	49	55	—	—	—	34	45	50
S2	—	—	—	37	48	55	33	43	50	30	39	46	—	—	—	28	36	42
S3	—	—	—	32	42	50	29	38	45	26	34	41	—	—	—	25	33	37
S11	—	—	—	60	70	80	55	65	75	50	65	70	—	—	—	44	55	65
S12	—	—	—	37	48	55	33	43	50	30	39	46	—	—	—	34	44	55
S13	—	—	—	29	39	46	26	35	41	24	32	37	—	—	—	30	38	45
H11	55	70	75	47	60	65	45	55	65	39	50	60	—	—	—	—	—	—

R220.69-15 – High feed rates

Slotting and contouring

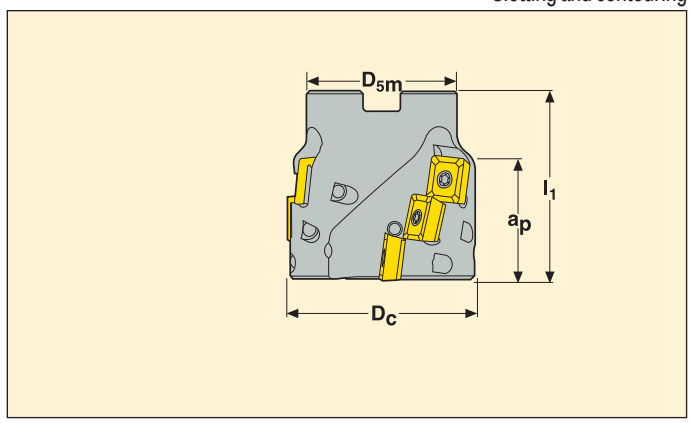

- For insert selection and cutting data recommendations, see page(s) 127-128
- For complete insert programme, see page(s) 601

Part No.	Type of mounting	Dimensions in mm					Z_c*		KG		Insert
		a_p	D_c	D_{5m}	dm_m	l_1					
R220.69 -0063038-15.4H	Arbor	38	63	62	27	63	4	12	0,7	7400	ACE.1506
-0080038-15.5H	Arbor	38	80	77	32	63	5	15	1,2	6500	ACE.1506
-0080050-15.5H	Arbor	50	80	77	32	75	5	20	1,5	6500	ACE.1506

*Effective number of flutes

Spare Parts

For cutter	Insert screw	Insert key	Arbor screw
R220.69-0063	CH9411-T09P	T09P-3	MC6S12X50
R220.69-0080	CH9411-T09P	T09P-3	MC6S16X50

Please check availability in current price and stock-list

Torque value 5,0 Nm, Torque keys, see page 690

R215220.69-15XH – Insert selection

SMG		f_z		
		100%	30%	10%
P1	ACET150612TR-ME10 F40M	0,12	0,13	0,20
P2	ACET150612TR-ME10 F40M	0,12	0,13	0,20
P3	ACET150612TR-M14 F40M	0,16	0,18	0,28
P4	ACET150612TR-M14 MP2500	0,16	0,17	0,26
P5	ACET150612TR-M11 MP2500	0,12	0,13	0,20
P6	ACET150612TR-M11 MP2500	0,12	0,13	0,20
P7	ACET150612TR-M11 MP2500	0,12	0,13	0,20
P8	ACET150612TR-M11 MP2500	0,13	0,14	0,22
P11	ACMT150612TR-M14 T350M	0,16	0,17	0,26
M1	ACMT150612TR-M14 F40M	0,17	0,19	0,28
M2	ACMT150612TR-M14 F40M	0,16	0,17	0,26
M3	ACMT150612TR-M14 F40M	0,13	0,14	0,22
M4	ACMT150612TR-M14 F40M	0,11	0,12	0,18
M5	ACMT150612TR-M14 F40M	0,11	0,12	0,18
K1	ACET150612TR-M14 MK1500	0,17	0,19	0,28
K2	ACET150612TR-M14 MK1500	0,16	0,17	0,26
K3	ACET150612TR-M14 MK1500	0,16	0,17	0,26
K4	ACET150612TR-M14 MK1500	0,16	0,17	0,26
K5	ACET150612TR-MD15 MP1500	0,15	0,17	0,26
K6	ACET150630TR-MD15 MP1500	0,17	0,19	0,28
K7	ACET150630TR-MD15 MP1500	0,15	0,17	0,26
S1	ACMT150612TR-M14 T350M	0,11	0,12	0,18
S2	ACMT150612TR-M14 T350M	0,11	0,12	0,18
S3	ACMT150612TR-M14 T350M	0,10	0,11	0,17
S11	ACET150612TR-M14 MS2050	0,13	0,14	0,22
S12	ACET150612TR-M14 MS2050	0,13	0,14	0,22
S13	ACET150612TR-M14 MS2050	0,11	0,12	0,18
H11	ACMT150612TR-M14 MP2500	0,11	0,12	0,18

SMG = Seco material group
f_z = mm/tooth
v_c= m/min
a_e/D_c = %
All cutting data are start values

R215/220.69-15XH – Cutting data v_c = (m/min)

	MP1500			MP2500			MP3000			T350M			F40M			MS2050		
SMG	100%	30%	10%	100%	30%	10%	100%	30%	10%	100%	30%	10%	100%	30%	10%	100%	30%	10%
P1	180	200	210	170	190	205	160	180	195	160	180	190	150	170	180	155	175	185
P2	175	195	210	165	185	200	155	175	190	155	175	190	145	165	180	155	170	180
P3	165	185	200	155	175	190	145	165	180	145	165	180	135	155	170	145	160	170
P4	155	175	190	145	170	180	135	160	170	135	160	170	125	145	160	135	150	160
P5	155	175	185	145	165	180	135	155	170	135	155	170	125	145	160	130	150	160
P6	165	185	195	155	175	185	140	165	175	145	165	175	135	155	165	140	160	165
P7	160	180	190	150	170	185	140	160	170	140	160	170	130	150	160	135	155	160
P8	150	175	185	145	165	175	135	155	165	135	155	165	120	145	155	130	150	155
P11	155	175	190	145	170	180	135	160	170	135	160	170	125	145	160	135	150	160
M1	—	—	—	140	165	175	135	155	170	135	155	170	130	150	165	145	160	170
M2	—	—	—	130	150	160	120	140	155	125	145	155	115	135	150	130	145	155
M3	—	—	—	110	135	145	105	125	140	105	130	140	100	120	135	115	130	135
M4	—	—	—	95	115	125	85	110	120	90	110	120	80	100	115	95	105	110
M5	—	—	—	80	100	115	75	95	105	75	95	110	70	90	100	80	90	95
K1	155	180	190	150	170	185	140	160	175	140	160	175	130	150	160	155	170	180
K2	150	170	185	140	160	175	130	150	165	130	150	165	120	140	155	145	165	170
K3	140	160	170	130	150	160	115	140	150	120	140	150	110	130	140	135	150	160
K4	135	155	170	125	145	160	115	135	150	115	135	150	105	125	140	130	145	155
K5	95	120	130	90	110	120	80	100	110	80	100	110	70	90	100	95	110	115
K6	125	145	160	115	135	150	105	125	140	105	125	140	95	115	130	120	140	145
K7	115	135	150	105	125	140	95	115	130	95	115	130	85	105	120	115	130	135
S1	—	—	—	47	60	75	41	55	65	42	55	65	38	50	60	35	45	55
S2	—	—	—	38	50	60	33	44	50	34	44	50	31	40	48	28	36	42
S3	—	—	—	33	43	50	29	38	45	30	39	46	27	35	42	26	33	38
S11	—	—	—	65	85	100	60	75	90	60	75	90	55	70	80	44	60	70
S12	—	—	—	38	49	60	33	43	50	34	44	55	31	40	48	34	45	55
S13	—	—	—	30	40	47	26	35	41	27	36	42	25	32	38	30	39	45
H11	60	80	90	49	65	75	45	60	70	47	60	75	41	55	65	—	—	—

R235.15 – Finishing operations

Contouring only

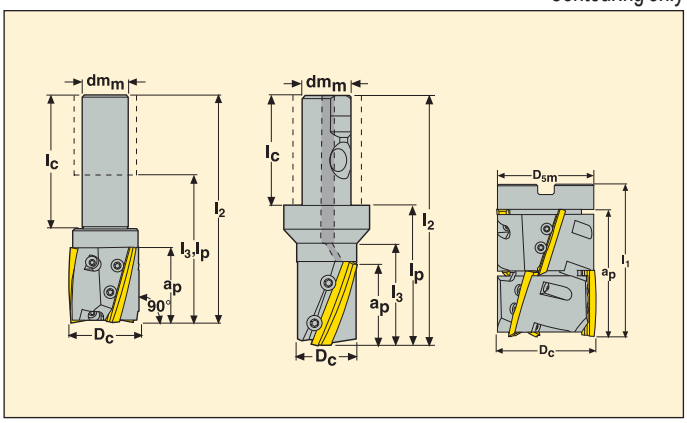

- For insert selection and cutting data recommendations, see page(s) 130
- For complete insert programme, see page(s) 649

Part No.		Type of mounting	Dimensions in mm a_p	D_c	D_{5m}	dm_m	l_1	l_2	l_3	l_p	l_c		Z_c*	KG		Insert
R235.15	-2532.0-40	Cylindrical	40	32	–	25	–	140	–	84	71	2	2	0,7	8000	R235.15-032
	-2532.3S-40A	Seco-Weldon	40	32	–	25	–	125	50	69	56	2	2	0,7	8000	R235.15-032
R235.15A	-3250.0-50	Cylindrical	50	50	–	32	–	155	–	95	95	3	3	1,2	5500	R235.15-050
	-3250.3S-50A	Seco-Weldon	50	50	–	32	–	120	60	60	70	3	3	0,9	5500	R235.15-050
R235.15A	-0080-90	Arbor	90	80	75	32	120	–	–	–	–	6	3	3,2	4400	R235.15-080

*Effective number of flutes

Spare Parts

For cutter	Setting key	Setting gauge	Insert screw	Insert key	Arbor screw
R235.15-2532	–	–	CL85012-T25P	T25P-3	–
R235.15-3250	T15P-2	AU8019-T15P	CL85012-T25P	T25P-3	–
R235.15-3250A	T15P-2	AU8019-T15P	CL85012-T25P	T25P-3	–
R235.15A-0080	T15P-2	AU8019-T15P	CL85012-T25P	T25P-3	MC6S16X100

Please check availability in current price and stock-list
Torque value 5,0 Nm, Torque keys, see page 690

R235.15 – Insert selection

SMG		f_z
		3%
P1	R235.15-xxx-E05 F30M	0,20
P2	R235.15-xxx-E05 F30M	0,22
P3	R235.15-xxx-E05 F30M	0,20
P4	R235.15-xxx-E05 F30M	0,20
P5	R235.15-xxx-E05 F30M	0,19
P6	R235.15-xxx-E05 F30M	0,19
P7	R235.15-xxx-E05 F30M	0,19
P8	R235.15-xxx-E05 F30M	0,20
P11	R235.15-xxx-E05 F30M	0,19
M1	R235.15-xxx-E05 F30M	0,22
M2	R235.15-xxx-E05 F30M	0,19
K1	R235.15-xxx-E05 F30M	0,22
K2	R235.15-xxx-E05 F30M	0,19
K3	R235.15-xxx-E05 F30M	0,19
K4	R235.15-xxx-E05 F30M	0,19
K5	R235.15-xxx-E05 F30M	0,17
K6	R235.15-xxx-E05 F30M	0,19
K7	R235.15-xxx-E05 F30M	0,17
S1	R235.15-xxx-E05 F30M	0,13
S2	R235.15-xxx-E05 F30M	0,13
S3	R235.15-xxx-E05 F30M	0,13
S11	R235.15-xxx-E05 F30M	0,15

SMG = Seco material group
f_z = mm/tooth
v_c= m/min
a_e/D_c = % (3% only valid for dia 32 mm, recommended max a_e = 1 mm for all dimensions)
All cutting data are start values

R235.15 – Cutting data v_c = (m/min)

SMG	F30M
	100%
P1	180
P2	180
P3	155
P4	135
P5	130
P6	145
P7	140
P8	130
P11	135
M1	120
M2	100
K1	140
K2	125
K3	105
K4	100
K5	60
K6	90
K7	80
S1	42
S2	34
S3	30
S11	60

16
9
10
11
12
13
14
15

Face milling cutters

Cutters	Insert type	a_p max	a_p rec.	Material suitability								
				P	M	K	N	S				Kr
Double Octomill	ON..05	3,0	2,0	■	■	■	□	◩	◩	◩	□	40°
Double Octomill	ON..09	6,0	3,0	■	■	■	□	◩	□	■	□	40°
Octomill	OF..05	3,5	2,5	◩	◩	◩	◩	◩	■	◩	◩	42°
Octomill	OF..07	5,0	4,0	◩	◩	◩	◩	◩	◩	■	◩	42°
Quattromill	SE..09T3	4,5	3,0	■	■	◩	■	■	■	◩	■	45°
Quattromill	SE..1204	6,0	4,5	■	■	◩	■	■	◩	■	■	45°
Quattromill	SE..1505	7,5	6,0	■	■	■	■	■	◩	■	■	45°

a_p max	Maximum depth of cut possible	1st choice	■	High speed machine with low Power / Torque		Unstable condition suitability	
a_p rec.	Recommended depth of cut for optimal result	Alternative choice	◩				
		Possible choice	□	Strong stable machine with rigid connecion			
		Not recommended	-				

Face milling cutters

Insert	No. of cutting edges	Pitch/ Applica-tion	Cutter diameter available (mm) / number of teeth															See page
			20	24*/25	32	40	50	63	80	100	125	160	200	250	315	400	500	
ON..05	16					4	4	5										172
				3	4		5	6	6	7	8							171, 172
						5	6	8	10	12	14							173
ON..09	16							5	6	7	8	10						177
								6	7	8	10	12	12	16	20			177
									9	12	15	20	24	30	40	50	60	178, 179
											8	10	12	16	20			180
OF..05	8				3	3	4	5	6	7	8	10						162
						4	5	6	8									163
												7						164
										6	8	10	12	16	20			164
											10	14	18		28			165
OF..07	8						4	4	5	6	8	10						155
								6	9	12	15							158
												7						156
										6	8	10	12	16				156
											10	14	18	22	28			157
SE..09T3	4		2	3	4	4	5	6	6	7								135, 136
						5	6	7	8	10								137
													8	10	12	16	20	138
									5	6	8	10		16	18			138
									6	8	10	14						139
SE..1204	4									5	6	7						142
						3	4	5	6	7	8	10						142
						4	5	6	8	10	12							143
												7	8	10	12	16	20	145
									5	6	8	10	12	16	18			145
									6	8	10	14						146
SE..1505	4																	
								5	6	7	8	10	12					149
									7	9	10	14						150
												7	8	10	12	16	20	151
									5	6	8	10	12	16	18			151
									6	8	10	14						141

x	Fixed pocket (x indicates number of teeth)
x	With cassette (x indicates number of teeth)

Troubleshooter for unstable fixturing and/or

Basic choice

Productivity

Milling cutters

In milling Seco uses product specific designation systems, there is no ISO system available for cutters. See example below.

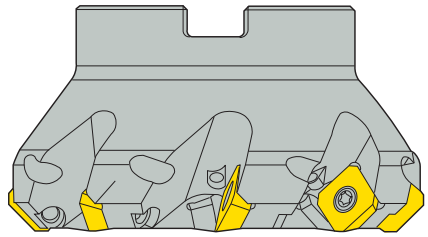

Code key for face milling cutter 217/220.53

217 = With shank
220 = For arbor

Cutter diameter

Effective No. of teeth (Z_c)

R	220	.	53	-	0100	-	12	-	7	A

Right hand rotation

Cutter system

Insert size

A = Holes for internal coolant supply
W = Insert locking with wedge
G = Coarse pitch version for low power machines
T = Close pitch version for high feed rates in powerful machines

Dimensions of mounting

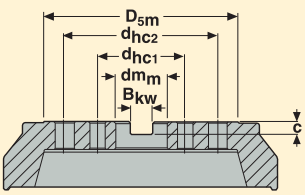

Dimensions in mm						Spindle-nose
D_{5m}	dm_m	B_{kw}	c	d_{hc1}	d_{hc2}	
30-35	16	8,4	5,6	–	–	–
42-47	22	10,4	6.3	–	–	–
48-62	27	12,4	7	–	–	–
60-90	32	14,4	8	–	–	–
90-130	40	16,4	9	66,7	–	(8xxx)
130-270	60	25,7	14	101,6	177,8	(8xxx)

For a more exact D_{5m} and dm_m measurement, see each product table.

R217.53-09

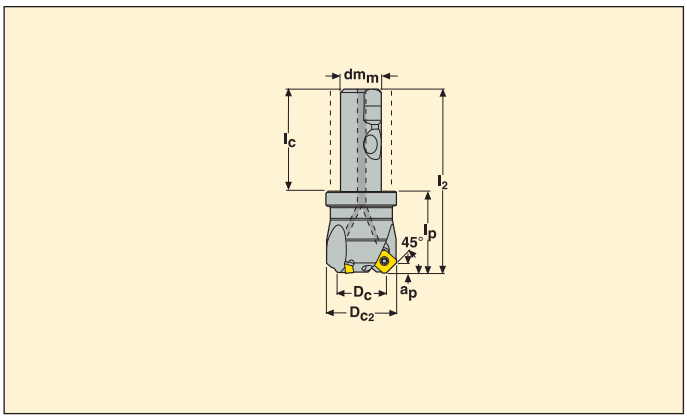

- For insert selection and cutting data recommendations, see page(s) 140–141
- For complete insert programme, see page(s) 620

Part No.	Type of mounting	Dimensions in mm a_p	D_{c2}	D_c	dm_m	l_2	l_p	l_c		KG		Insert
R217.53 -2020.3S-09-2A	Seco-Weldon	4,5	30	20	20	90	40	50	2	0,3	25100	SE..09T3
-2025.3S-09-3A	Seco-Weldon	4,5	35	25	20	90	40	50	3	0,4	22400	SE..09T3
-2032.3S-09-4A	Seco-Weldon	4,5	42	32	20	90	40	50	4	0,4	19800	SE..09T3

Spare Parts

For cutter	Insert screw	Insert key
R217.53..	C03008-T09P	T09P-3

Please check availability in current price and stock-list
Torque value 2,0 Nm, Torque keys, see page 690

R220.53-09

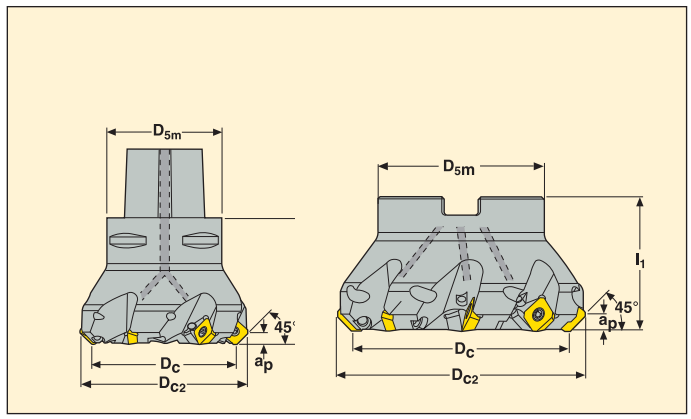

- For insert selection and cutting data recommendations, see page(s) 140–141
- For complete insert programme, see page(s) 620

Pitch	Part No.	Type of mounting	Dimensions in mm a_p	D_c	D_{c2}	D_{5m}	dm_m	l_1		KG		Insert
Normal												
	R220.53 -0032-09-4A	Arbor	4,5	32	42	35	16	40	4	0,3	19800	SE..09T3
	C5-R217.53 -040-09-4A	Seco-Capto	4,5	40	50	50		55	4	0,8	17700	SE..09T3
	R220.53 -0040-09-4A	Arbor	4,5	40	50	47	22	40	4	0,4	17700	SE..09T3
	C5-R217.53 -050-09-5A	Seco-Capto	4,5	50	60	50		55	5	0,9	15800	SE..09T3
	R220.53 -0050-09-5A	Arbor	4,5	50	60	47	22	40	5	0,5	15800	SE..09T3
	C5-R217.53 -063-09-6A	Seco-Capto	4,5	63	73	50		55	6	1,1	14100	SE..09T3
	R220.53 -0063-09-6A	Arbor	4,5	63	73	47	22	40	6	0,6	14100	SE..09T3
	C5-R217.53 -080-09-6A	Seco-Capto	4,5	80	90	50		55	6	1,3	12500	SE..09T3
	R220.53 -0080-09-6A	Arbor	4,5	80	90	62	27	50	6	1,2	12500	SE..09T3
	R220.53 -0100-09-7A	Arbor	4,5	100	110	77	32	50	7	1,8	11200	SE..09T3

Spare Parts

For cutter	Insert screw	Insert key	Arbor screw
		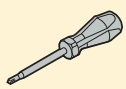	
R220.53-0032	C03008-T09P	T09P-3	220.17-690
C5-R217.53-..	C03008-T09P	T09P-3	–
R220.53-0040-0063	C03008-T09P	T09P-3	220.17-696
R220.53-0080-0100	C03008-T09P	T09P-3	–

Please check availability in current price and stock-list
Torque value 2,0 Nm, Torque keys, see page 690

R220.53-09

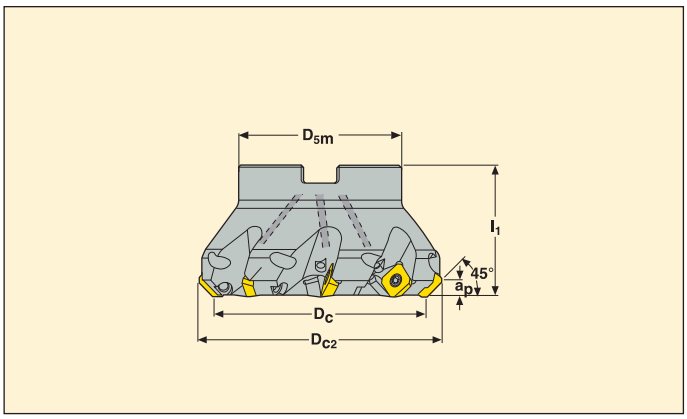

- For insert selection and cutting data recommendations, see page(s) 140–141
- For complete insert programme, see page(s) 620

Pitch	Part No.	Type of mounting	Dimensions in mm a_p	D_c	D_{c2}	D_{5m}	dm_m	l_1		KG		Insert
Close												
	R220.53 -0040-09-5A	Arbor	4,5	40	50	42	22	40	5	0,4	17700	SE..09T3
	-0050-09-6A	Arbor	4,5	50	60	42	22	40	6	0,5	15800	SE..09T3
	-0063-09-7A	Arbor	4,5	63	73	47	22	40	7	0,6	14100	SE..09T3
	-0080-09-8A	Arbor	4,5	80	90	62	27	50	8	1,2	12500	SE..09T3
	-0100-09-10A	Arbor	4,5	100	110	77	22	50	10	1,8	11200	SE..09T3

Spare Parts

For cutter	Insert screw	Insert key	Arbor screw
		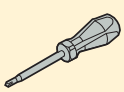	
R220.53-0040-0063	C03008-T09P	T09P-3	220.17-696
R220.53-0080-0100	C03008-T09P	T09P-3	–

Please check availability in current price and stock-list
Torque value 2,0 Nm, Torque keys, see page 690

R220.53-09C

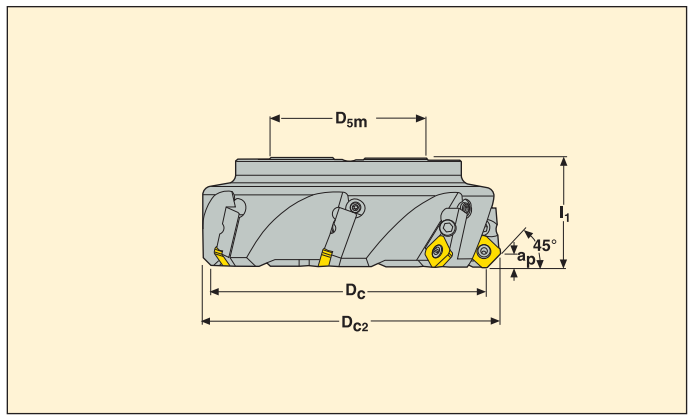

- For insert selection and cutting data recommendations, see page(s) 140–141
- For complete insert programme, see page(s) 620

Pitch	Part No.	Type of mounting	Dimensions in mm a_p	D_c	D_{c2}	D_{5m}	dm_m	l_1		KG		Insert
Normal												
	R220.53 -0080-09-5C	Arbor	4,5	80	90	62	27	50	5	1,7	7400	SE..09T3
	-0100-09-6C	Arbor	4,5	100	110	77	32	50	6	2,5	6600	SE..09T3
	-0125-09-8C	Arbor	4,5	125	135	90	40	63	8	4,2	5900	SE..09T3
	-8160-09-10C	Arbor	4,5	160	170	90	40	63	10	6,6	5200	SE..09T3
	-8250-09-16C	Arbor	4,5	250	260	130	60	63	16	17,2	4200	SE..09T3
	-8315-09-18C	Arbor	4,5	315	325	225	60	80	18	32,8	3700	SE..09T3
Coarse												
	R220.53 -8200-09-8C	Arbor	4,5	200	210	130	60	63	8	9,4	4700	SE..09T3
	-8250-09-10C	Arbor	4,5	250	260	130	60	63	10	17,1	4200	SE..09T3
	-8315-09-12C	Arbor	4,5	315	325	225	60	80	12	32,6	3700	SE..09T3
	-8400-09-16C	Arbor	4,5	400	410	225	60	80	16	51,2	3300	SE..09T3
	-8500-09-20C	Arbor	4,5	500	510	225	60	80	20	80,7	2900	SE..09T3

Spare Parts

For cutter	Setting gauge	Insert screw	Insert key	Cassette screw	Cassette
R220.53-0080-0125	AU1114T-T15P	C03008-T09P	T09P-3	FS96018	SE09AR-53
R220.53-8160-8500	AU1114T-T15P	C03008-T09P	T09P-3	FS96018	SE09AR-53

Please check availability in current price and stock-list
Torque value 2,0 Nm, Torque keys, see page 690

R220.53-09C

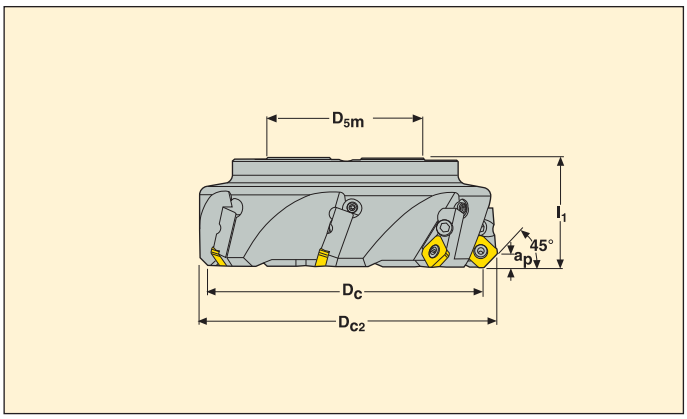

- For insert selection and cutting data recommendations, see page(s) 140–141
- For complete insert programme, see page(s) 620

Pitch	Part No.	Type of mounting	Dimensions in mm a_p	D_c	D_{c2}	D_{5m}	dm_m	l_1		KG		Insert
Close												
	R220.53 -0080-09-6C	Arbor	4,5	80	90	62	27	50	6	1,7	7400	SE..09T3
	-0100-09-8C	Arbor	4,5	100	110	77	32	50	8	2,6	6600	SE..09T3
	-0125-09-10C	Arbor	4,5	125	135	90	40	63	10	4,2	5900	SE..09T3
	-8160-09-14C	Arbor	4,5	160	170	90	40	63	14	6,6	5200	SE..09T3

Spare Parts

For cutter	Setting gauge	Insert screw	Insert key	Cassette screw	Cassette
R220.53-0080-0125	AU1114T-T15P	C03008-T09P	T09P-3	FS96018	SE09AR-53
R220.53-8160	AU1114T-T15P	C03008-T09P	T09P-3	FS96018	SE09AR-53

Please check availability in current price and stock-list
Torque value 2,0 Nm, Torque keys, see page 690

R220.53-09 – Insert selection

SMG		a_p	f_z		
			100%	30%	10%
P1	SEMX09T3AFTN-ME06 MP2500	2,5	0,12	0,13	0,20
P2	SEMX09T3AFTN-ME06 MP2500	2,5	0,12	0,13	0,20
P3	SEMX09T3AFTN-ME06 MP2500	2,5	0,11	0,13	0,19
P4	SEMX09T3AFTN-ME06 MP2500	2,5	0,11	0,12	0,19
P5	SEMX09T3AFTN-ME06 MP2500	2,5	0,11	0,12	0,18
P6	SEMX09T3AFTN-M08 MP2500	2,5	0,15	0,16	0,24
P7	SEMX09T3AFTN-M08 MP2500	2,5	0,15	0,16	0,24
P8	SEEX09T3AFTN-D09 MP1500	2,5	0,17	0,19	0,28
P11	SEEX09T3AFTN-D09 MP1500	2,5	0,16	0,18	0,28
M1	SEEX09T3AFTN-ME07 F40M	2,5	0,14	0,15	0,24
M2	SEEX09T3AFTN-ME07 F40M	2,5	0,13	0,14	0,22
M3	SEMX09T3AFTN-M08 T350M	2,0	0,12	0,13	0,20
M4	SEMX09T3AFTN-M08 T350M	1,6	0,10	0,11	0,17
M5	SEMX09T3AFTN-M08 MM4500	1,6	0,10	0,11	0,17
K1	SEEX09T3AFTN-M08 MK1500	2,5	0,16	0,18	0,28
K2	SEEX09T3AFTN-M08 MK1500	2,5	0,15	0,16	0,24
K3	SEEX09T3AFTN-M08 MK2050	2,5	0,15	0,16	0,24
K4	SEEX09T3AFTN-M08 MK2050	2,5	0,15	0,16	0,24
K5	SEEX09T3AFTN-M08 MK2050	2,5	0,13	0,14	0,22
K6	SEEX09T3AFTN-M08 MK2050	2,5	0,15	0,16	0,24
K7	SEEX09T3AFTN-M08 MK2050	2,5	0,13	0,14	0,22
N1	SEEX09T3AFN-E04 H15	2,5	0,10	0,11	0,17
N2	SEEX09T3AFN-E04 H15	2,5	0,10	0,11	0,17
N3	SEEX09T3AFN-E04 F40M	2,5	0,10	0,11	0,17
N11	SEEX09T3AFN-E04 F40M	2,5	0,10	0,11	0,17
S1	SEEX09T3AFTN-ME07 T350M	1,6	0,090	0,10	0,15
S2	SEEX09T3AFTN-ME07 T350M	1,6	0,090	0,10	0,15
S3	SEEX09T3AFTN-ME07 T350M	1,6	0,085	0,090	0,14
S11	SEEX09T3AFN-M05 MS2050	1,9	0,075	0,080	0,12
S12	SEEX09T3AFN-M05 MS2050	1,9	0,075	0,080	0,12
S13	SEEX09T3AFN-M05 MS2050	1,6	0,065	0,070	0,11

SMG = Seco material group
f_z = mm/tooth
v_c= m/min
a_e/D_c = %
All cutting data are start values

R220.53-09 – Cutting data v_c = (m/min)

	MP1500			MP2500			MP3000			T350M			F15M			F40M		
SMG	100%	30%	10%	100%	30%	10%	100%	30%	10%	100%	30%	10%	100%	30%	10%	100%	30%	10%
P1	335	445	530	305	415	490	325	435	510	320	430	500	385	520	610	230	315	370
P2	325	435	520	295	395	470	315	425	500	310	420	490	375	500	590	225	300	355
P3	285	380	455	260	345	410	275	375	435	270	360	430	330	435	510	195	260	310
P4	250	340	400	230	310	360	245	330	385	240	325	380	290	390	450	175	235	275
P5	240	325	380	220	295	350	235	315	370	230	310	360	275	370	440	165	225	265
P6	270	365	430	245	330	395	265	350	415	255	345	405	310	415	490	185	250	300
P7	255	345	405	230	315	375	250	330	395	240	325	385	295	395	465	175	240	285
P8	240	320	380	220	290	345	230	315	365	230	305	360	275	365	430	165	220	260
P11	250	335	395	225	305	360	240	320	380	235	315	370	285	380	450	170	230	275
M1	—	—	—	215	285	335	235	315	375	240	325	380	305	405	475	180	240	285
M2	—	—	—	175	240	285	195	260	310	195	265	310	250	335	395	150	200	240
M3	—	—	—	140	190	225	155	210	245	160	210	250	200	265	310	120	160	190
M4	—	—	—	110	145	175	120	160	190	125	160	195	155	200	240	95	125	150
M5	—	—	—	95	125	145	100	130	155	100	135	160	130	170	200	80	105	125
K1	255	345	410	235	315	370	250	335	395	245	330	390	300	395	465	180	240	280
K2	225	305	365	210	280	335	225	295	350	215	290	345	260	350	415	155	215	255
K3	190	260	305	175	240	285	190	250	300	185	245	290	220	300	350	135	180	215
K4	185	250	295	170	225	270	180	240	285	175	235	275	210	285	335	125	170	205
K5	115	150	180	105	140	165	110	145	170	105	145	170	130	175	205	80	105	125
K6	160	220	260	150	200	240	160	210	250	155	210	245	185	250	295	110	150	180
K7	145	195	230	135	180	210	140	185	220	135	185	220	165	220	260	100	135	160
N1	—	—	—	870	1175	1400	930	1250	1475	—	—	—	1125	1500	1775	660	890	1050
N2	—	—	—	710	950	1125	750	1025	1200	—	—	—	910	1200	1425	530	720	850
N3	—	—	—	470	630	750	500	680	790	—	—	—	600	810	950	355	480	570
N11	—	—	—	540	720	860	570	770	910	—	—	—	690	920	1100	405	550	650
S1	—	—	—	55	70	85	55	75	90	55	75	90	70	95	110	44	60	70
S2	—	—	—	44	60	70	45	60	70	46	60	75	60	75	90	35	47	55
S3	—	—	—	38	50	60	40	50	60	40	55	65	50	65	80	31	41	49
S11	—	—	—	75	100	120	80	105	125	80	105	125	100	130	155	60	80	95
S12	—	—	—	43	60	70	45	60	70	47	60	75	60	75	90	35	47	55
S13	—	—	—	35	46	55	36	48	55	37	49	60	46	60	70	28	38	45
H5	55	70	85	44	60	70	47	65	75	50	65	80	60	80	95	37	49	60
H8	55	75	90	47	60	75	50	65	80	55	70	85	65	80	95	39	50	60
H11	70	90	110	55	75	90	60	80	95	65	85	100	75	100	120	47	65	75
H12	110	145	175	90	120	145	100	130	155	105	140	165	125	165	190	75	100	120
H21	55	75	90	47	60	75	50	65	80	55	70	85	65	80	95	39	50	60

R220.53-09 – Cutting data v_c =(m/min)

	MK1500			MK2050			MM4500			MS2050		
SMG	100%	30%	10%	100%	30%	10%	100%	30%	10%	100%	30%	10%
P1	—	—	—	300	405	480	185	255	300	240	265	280
P2	—	—	—	295	390	460	180	245	285	235	260	270
P3	—	—	—	255	340	405	160	215	250	195	210	225
P4	—	—	—	225	305	355	140	190	220	175	185	195
P5	—	—	—	215	290	345	135	180	215	160	175	180
P6	—	—	—	240	325	390	150	205	245	180	195	200
P7	—	—	—	230	310	365	140	195	230	170	185	190
P8	—	—	—	215	285	340	135	180	210	165	175	185
P11	—	—	—	220	300	355	140	185	220	165	180	185
M1	—	—	—	—	—	—	155	210	245	205	225	235
M2	—	—	—	—	—	—	130	175	205	155	170	175
M3	—	—	—	—	—	—	105	140	165	105	110	105
M4	—	—	—	—	—	—	80	110	130	70	70	75
M5	—	—	—	—	—	—	70	90	105	60	60	60
K1	335	445	530	315	420	495	—	—	—	235	260	275
K2	295	400	475	280	375	450	—	—	—	195	210	215
K3	250	335	400	235	320	380	—	—	—	165	180	180
K4	235	320	380	225	305	360	—	—	—	155	170	175
K5	145	200	230	140	185	220	—	—	—	90	95	95
K6	210	285	335	200	270	320	—	—	—	140	150	155
K7	190	255	300	180	240	280	—	—	—	115	120	125
S1	—	—	—	—	—	—	25	33	39	60	70	80
S2	—	—	—	—	—	—	20	26	32	47	55	65
S3	—	—	—	—	—	—	18	23	28	41	50	55
S11	—	—	—	—	—	—	34	46	55	80	100	115
S12	—	—	—	—	—	—	26	35	42	60	75	85
S13	—	—	—	—	—	—	21	28	34	50	60	70

R217/220.53-12

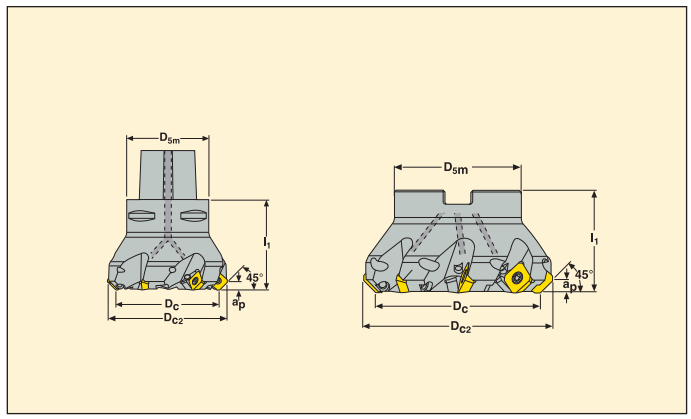

- For insert selection and cutting data recommendations, see page(s) 147–148
- For complete insert programme, see page(s) 641

Pitch	Part No.	Type of mounting	Dimensions in mm a_p	D_c	D_{c2}	D_{5m}	dm_m	l_1		KG		Insert
Normal												
	C5-R217.53 -040-12-3A	Seco-Capto	6	40	52	50		55	3	0,8	16500	SE.X1204
	-050-12-4A	Seco-Capto	6	50	62	50		55	4	0,9	14800	SE.X1204
	-063-12-5A	Seco-Capto	6	63	75	50		55	5	1,1	13200	SE.X1204
	-080-12-6A	Seco-Capto	6	80	92	50		55	6	1,2	11700	SE.X1204
	C6-R217.53 -040-12-3A	Seco-Capto	6	40	52	63		63	3	1,3	16500	SE.X1204
	-050-12-4A	Seco-Capto	6	50	62	63		63	4	1,3	14800	SE.X1204
	-063-12-5A	Seco-Capto	6	63	75	63		63	5	1,6	13200	SE.X1204
	-080-12-6A	Seco-Capto	6	80	92	63		63	6	1,9	11700	SE.X1204
	R220.53 -0040-12-3A	Arbor	6	40	52	47	22	40	3	0,4	16500	SE.X1204
	-0050-12-4A	Arbor	6	50	62	47	22	40	4	0,5	14800	SE.X1204
	-0063-12-5A	Arbor	6	63	75	47	22	40	5	0,6	13200	SE.X1204
	-0080-12-6A	Arbor	6	80	92	62	27	50	6	1,1	11700	SE.X1204
	-0100-12-7A	Arbor	6	100	112	77	32	50	7	1,8	10500	SE.X1204
	-0125-12-8A	Arbor	6	125	137	90	40	63	8	1,4	9400	SE.X1204
	-8160-12-10	Arbor	6	160	172	90	40	63	10	4,6	8300	SE.X1204
Coarse												
	R220.53 -0100-12-5A	Arbor	6	100	112	77	32	50	5	1,8	10500	SE.X1204
	-0125-12-6A	Arbor	6	125	137	90	40	63	6	3,1	9400	SE.X1204
	-8160-12-7	Arbor	6	160	172	90	40	63	7	4,6	8300	SE.X1204

Spare Parts

For cutter	Insert screw	Insert key	Arbor screw
		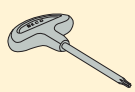	
R217.53-12	C04011-T15P	T15P-4	–
R220.53-0040-0063	C04011-T15P	T15P-4	220.17-696
R220.53-0063	C04011-T15P	T15P-4	220.17-696
R220.53-0080-8200	C04011-T15P	T15P-4	–

Please check availability in current price and stock-list
Torque value 3,5 Nm. Torque keys, see page 690

R220.53-12

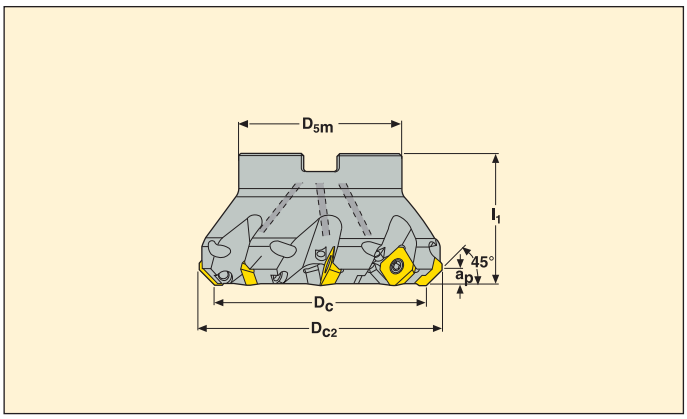

- For insert selection and cutting data recommendations, see page(s) 147–148
- For complete insert programme, see page(s) 641

Pitch	Part No.	Type of mounting	Dimensions in mm a_p	D_c	D_{c2}	D_{5m}	dm_m	l_1		KG		Insert
Close												
	R220.53 -0040-12-4A	Arbor	6	40	52	47	22	40	4	0,4	16500	SE.X1204
	-0050-12-5A	Arbor	6	50	62	47	22	40	5	0,4	14800	SE.X1204
	-0063-12-6A	Arbor	6	63	75	47	22	40	6	0,6	13200	SE.X1204
	-0080-12-8A	Arbor	6	80	92	62	27	50	8	1,1	11700	SE.X1204
	-0100-12-10A	Arbor	6	100	112	77	32	50	10	1,7	10500	SE.X1204
	-0125-12-12A	Arbor	6	125	137	90	40	63	12	3,1	9400	SE.X1204

Spare Parts

For cutter	Insert screw	Insert key	Arbor screw
		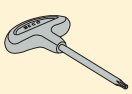	
R220.53-0040-0063	C04011-T15P	T15P-4	220.17-696
R220.53-0050	C04011-T15P	T15P-4	220.17-696
R220.53-0080-8200	C04011-T15P	T15P-4	–

Please check availability in current price and stock-list
Torque value 3,5 Nm. Torque keys, see page 690

R220.53-12

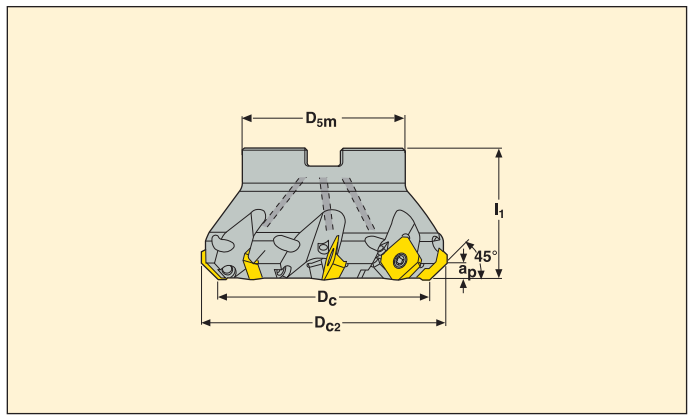

- For insert selection and cutting data recommendations, see page(s) 147–148
- For complete insert programme, see page(s) 641

Pitch	Part No.		Type of mounting	Dimensions in mm a_p	D_c	D_{c2}	D_{5m}	dm_m	l_1		KG		Insert
Close													
	R220.53	-0063-12-9A	Arbor	6,0	63,0	75,0	47,0	22,0	40,0	9	0,6	13200	SE.X1204
		-0080-12-11A	Arbor	6,0	80,0	92,0	62,0	27,0	50,0	11	1,1	11700	SE.X1204
		-0100-12-12A	Arbor	6,0	100,0	112,0	77,0	32,0	50,0	12	1,7	10500	SE.X1204
		-0125-12-14A	Arbor	6,0	125,0	137,0	90,0	40,0	63,0	14	3,1	9400	SE.X1204
		-8160-12-17	Arbor	6,0	160,0	172,0	130,0	40,0	63,0	17	5,3	8300	SE.X1204
		-8200-12-20	Arbor	6,0	200,0	212,0	160,0	60,0	63,0	20	7,2	7400	SE.X1204

Spare Parts

For cutter	Key (T-handle)	Insert screw	Insert key
R220.53-.. 0063	DOUBLE-T	C04008-H3	H6B-H3.0
R220.53- Dia 80-160	DOUBLE-T	C04008-H3	H6B-H3.0
R220.53- Dia 200	DOUBLE-T	C04008-H3	H6B-H3.0

Please check availability in current price and stock-list
Torque value 3,5 Nm. Torque keys, see page 690

R220.53-12C

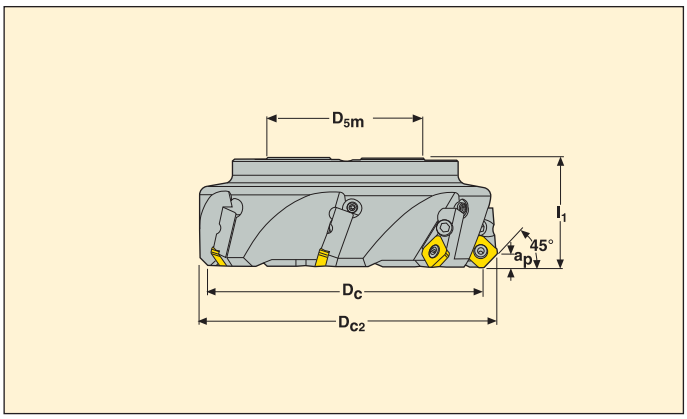

- For insert selection and cutting data recommendations, see page(s) 147–148
- For complete insert programme, see page(s) 641

Pitch	Part No.	Type of mounting	Dimensions in mm a_p	D_c	D_{c2}	D_{5m}	dm_m	l_1		KG		Insert
Normal												
	R220.53 -0080-12-5C	Arbor	6	80	90	62	27	50	5	1,7	7400	SE.X1204
	-0100-12-6C	Arbor	6	100	112	77	32	50	6	2,6	6600	SE.X1204
	-0125-12-8C	Arbor	6	125	137	90	40	63	8	4,2	5900	SE.X1204
	-8160-12-10C	Arbor	6	160	172	90	40	63	10	6,6	5200	SE.X1204
	-8200-12-12C	Arbor	6	200	212	130	60	63	12	9,3	4700	SE.X1204
	-8250-12-16C	Arbor	6	250	262	130	60	63	16	16,0	4200	SE.X1204
	-8315-12-18C	Arbor	6	315	327	225	60	80	18	32,8	3700	SE.X1204
Coarse												
	R220.53 -8160-12-7C	Arbor	6	160	172	90	40	63	7	6,5	5200	SE.X1204
	-8200-12-8C	Arbor	6	200	212	130	60	63	8	9,4	4700	SE.X1204
	-8250-12-10C	Arbor	6	250	262	130	60	63	10	17,0	4200	SE.X1204
	-8315-12-12C	Arbor	6	315	327	225	60	80	12	32,9	3700	SE.X1204
	-8400-12-16C	Arbor	6	400	412	225	60	80	16	51,0	3300	SE.X1204
	-8500-12-20C	Arbor	6	500	512	225	60	80	20	80,2	2900	SE.X1204

Spare Parts

For cutter	Setting gauge	Insert screw	Insert key	Cassette screw	Cassette
			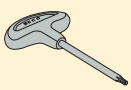		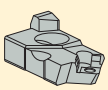
R220.53-..	AU1114T-T15P	C04011-T15P	T15P-4	FS96018	SE12AR-53

Please check availability in current price and stock-list
Torque value 3,5 Nm. Torque keys, see page 690

R220.53-12C

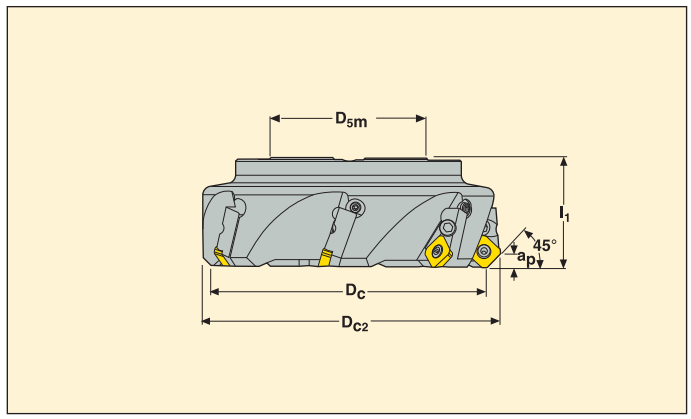

- For insert selection and cutting data recommendations, see page(s) 147–148
- For complete insert programme, see page(s) 641

Pitch	Part No.	Type of mounting	Dimensions in mm a_p	D_c	D_{c2}	D_{5m}	dm_m	l_1		KG		Insert
Close												
	R220.53 -0080-12-6C	Arbor	6	80	92	62	27	50	6	1,7	7400	SE.X1204
	-0100-12-8C	Arbor	6	100	112	77	32	50	8	2,6	6600	SE.X1204
	-0125-12-10C	Arbor	6	125	137	90	40	63	10	4,2	5900	SE.X1204
	-8160-12-14C	Arbor	6	160	172	90	40	63	14	6,6	5200	SE.X1204

Spare Parts

For cutter	Setting gauge	Insert screw	Insert key	Cassette screw	Cassette
			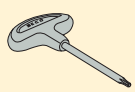		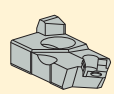
R220.53-..	AU1114T-T15P	C04011-T15P	T15P-4	FS96018	SE12AR-53

Please check availability in current price and stock-list
Torque value 3,5 Nm. Torque keys, see page 690

R220.53-12 – Insert selection

SMG		a_p	f_z		
			100%	30%	10%
P1	SEMX1204AFTN-M15 MP2500	3,5	0,30	0,32	0,50
P2	SEMX1204AFTN-M15 MP2500	3,5	0,30	0,34	0,50
P3	SEMX1204AFTN-M15 MP2500	3,5	0,28	0,32	0,48
P4	SEMX1204AFTN-M15 MP2500	3,5	0,28	0,30	0,48
P5	SEMX1204AFTN-M15 MP2500	3,5	0,28	0,30	0,46
P6	SEMX1204AFTN-M15 MP2500	3,5	0,28	0,30	0,46
P7	SEMX1204AFTN-M15 T350M	3,5	0,28	0,30	0,46
P8	SEMX1204AFTN-M15 T350M	3,5	0,28	0,32	0,48
P11	SEMX1204AFTN-M15 T350M	3,5	0,28	0,30	0,46
M1	SEEX1204AFN-M10 F40M	3,5	0,20	0,22	0,34
M2	SEEX1204AFN-M10 F40M	3,5	0,18	0,20	0,30
M3	SEEX1204AFN-M10 F40M	3,0	0,15	0,16	0,24
M4	SEEX1204AFN-M10 T350M	2,0	0,13	0,14	0,22
M5	SEEX1204AFTN-M14 MM4500	2,0	0,18	0,20	0,30
K1	SEMX1204AFTN-M15 MK2050	3,5	0,30	0,34	0,50
K2	SEMX1204AFTN-M15 MK2050	3,5	0,28	0,30	0,46
K3	SEMX1204AFTN-M15 MK2050	3,5	0,28	0,30	0,46
K4	SEMX1204AFTN-M15 MK2050	3,5	0,28	0,30	0,46
K5	SEMX1204AFTN-M15 MK2050	3,5	0,24	0,28	0,42
K6	SEMX1204AFTN-M15 MK2050	3,5	0,28	0,30	0,46
K7	SEMX1204AFTN-M15 MK2050	3,5	0,24	0,28	0,42
N1	SEEX1204AFN-E08 H25	3,5	0,20	0,22	0,34
N2	SEEX1204AFN-E08 H25	3,5	0,20	0,22	0,34
N3	SEEX1204AFN-E08 F40M	3,5	0,20	0,22	0,34
N11	SEEX1204AFN-E08 H25	3,5	0,20	0,22	0,34
S1	SEEX1204AFTN-ME11 T350M	2,0	0,14	0,15	0,24
S2	SEEX1204AFTN-ME11 T350M	2,0	0,14	0,15	0,24
S3	SEEX1204AFTN-ME11 T350M	2,0	0,13	0,14	0,22
S11	SEEX1204AFN-M10 MS2050	2,5	0,15	0,16	0,24
S12	SEEX1204AFN-M10 MS2050	2,5	0,15	0,16	0,24
S13	SEEX1204AFN-M10 MS2050	2,0	0,13	0,14	0,22
H5	SEMX1204AFTN-MD19 MP1500	3,0	0,24	0,26	0,40
H8	SEMX1204AFTN-MD19 MP1500	2,5	0,18	0,20	0,30
H11	SEMX1204AFTN-MD19 MP1500	3,0	0,24	0,26	0,40
H12	SEMX1204AFTN-MD19 MP1500	3,0	0,24	0,26	0,40
H21	SEMX1204AFTN-MD19 MP1500	2,5	0,18	0,20	0,30

SMG = Seco material group
f_z = mm/tooth
v_c= m/min
a_e/D_c = %
All cutting data are start values

R220.53-12 – Cutting data v_c = (m/min)

	MP1020			MP1500			MP2500			MP3000			T350M			F40M		
SMG	100%	30%	10%	100%	30%	10%	100%	30%	10%	100%	30%	10%	100%	30%	10%	100%	30%	10%
P1	225	310	360	300	410	485	265	360	425	225	305	365	230	315	370	200	275	325
P2	220	300	335	290	390	470	260	345	415	220	295	355	225	300	365	195	260	315
P3	210	260	315	255	340	410	225	305	365	190	260	305	195	265	315	170	230	275
P4	185	245	275	225	310	360	200	270	320	170	230	275	175	235	280	150	205	240
P5	175	235	265	215	295	350	190	260	310	160	220	265	165	225	270	145	195	235
P6	195	260	305	240	330	390	215	290	345	185	250	295	185	255	300	160	220	265
P7	185	245	290	230	310	370	200	275	330	175	235	280	175	240	285	155	210	250
P8	175	220	265	215	290	345	190	255	305	160	220	255	165	220	265	145	195	230
P11	180	240	280	220	300	360	195	270	320	170	230	270	170	235	275	150	205	240
M1	—	—	—	—	—	—	185	250	300	165	220	265	175	230	280	155	210	255
M2	—	—	—	—	—	—	155	210	250	135	185	220	145	195	230	130	175	210
M3	—	—	—	—	—	—	125	170	205	110	150	180	115	160	190	105	145	170
M4	—	—	—	—	—	—	100	130	160	85	115	140	90	120	145	85	110	135
M5	—	—	—	—	—	—	80	110	130	70	95	115	75	100	125	70	90	110
K1	—	—	—	230	310	375	205	275	330	175	235	280	180	240	290	155	210	250
K2	—	—	—	205	280	330	180	245	295	155	210	250	160	215	255	135	185	220
K3	—	—	—	175	235	280	155	210	250	130	180	210	135	180	215	115	160	190
K4	—	—	—	165	225	270	145	200	235	125	170	200	125	175	205	110	150	180
K5	—	—	—	105	135	165	90	120	145	75	105	125	80	105	125	70	90	110
K6	—	—	—	145	200	235	130	175	210	110	150	180	110	155	180	100	135	160
K7	—	—	—	130	175	210	115	155	185	100	135	160	100	135	160	90	120	140
N1	—	—	—	—	—	—	750	1000	1200	630	860	1000	—	—	—	570	770	910
N2	—	—	—	—	—	—	600	820	970	510	690	820	—	—	—	455	620	730
N3	—	—	—	—	—	—	400	540	650	340	465	540	—	—	—	305	415	490
N11	—	—	—	—	—	—	460	620	740	385	530	620	—	—	—	350	470	560
S1	—	—	—	—	—	—	48	65	75	40	55	65	43	55	70	39	50	60
S2	—	—	—	—	—	—	39	50	60	32	43	55	35	45	55	31	41	50
S3	—	—	—	—	—	—	34	45	55	29	38	46	30	40	48	28	37	44
S11	—	—	—	—	—	—	65	90	105	55	75	90	60	80	95	55	70	85
S12	—	—	—	—	—	—	38	50	60	33	44	50	34	46	55	31	42	50
S13	—	—	—	—	—	—	31	41	50	26	35	42	28	36	44	25	33	40
H5	—	—	—	48	65	75	39	55	60	35	47	55	37	50	60	33	44	50
H8	—	—	—	55	70	85	42	55	65	37	50	60	41	55	65	35	47	55
H11	—	—	—	60	85	100	50	70	80	45	60	70	48	65	75	42	55	65
H12	—	—	—	100	135	160	80	110	130	70	95	115	75	105	125	65	90	110
H21	—	—	—	55	70	85	42	55	65	37	50	60	41	55	65	35	47	55

R220.53-12 – Cutting data v_c = (m/min)

	MM4500			MK1500			MK2050			H25		
SMG	100%	30%	10%	100%	30%	10%	100%	30%	10%	100%	30%	10%
P1	160	220	260	—	—	—	260	355	420	—	—	—
P2	160	210	255	—	—	—	255	340	410	—	—	—
P3	140	185	225	—	—	—	225	300	355	—	—	—
P4	125	165	195	—	—	—	195	270	315	—	—	—
P5	115	160	190	—	—	—	190	255	305	—	—	—
P6	130	180	215	—	—	—	210	290	340	—	—	—
P7	125	170	200	—	—	—	200	270	325	—	—	—
P8	115	155	185	—	—	—	190	250	300	—	—	—
P11	120	165	195	—	—	—	195	265	315	—	—	—
M1	135	180	220	—	—	—	—	—	—	—	—	—
M2	110	155	180	—	—	—	—	—	—	—	—	—
M3	90	125	150	—	—	—	—	—	—	—	—	—
M4	70	95	115	—	—	—	—	—	—	—	—	—
M5	60	80	95	—	—	—	—	—	—	—	—	—
K1	—	—	—	290	390	470	275	365	445	—	—	—
K2	—	—	—	255	350	415	245	330	395	—	—	—
K3	—	—	—	215	295	350	205	280	335	—	—	—
K4	—	—	—	205	285	335	195	265	320	—	—	—
K5	—	—	—	130	170	205	120	165	195	—	—	—
K6	—	—	—	180	250	295	175	235	280	—	—	—
K7	—	—	—	165	220	265	155	210	250	—	—	—
N1	—	—	—	—	—	—	—	—	—	740	1000	1175
N2	—	—	—	—	—	—	—	—	—	600	810	950
N3	—	—	—	—	—	—	—	—	—	400	540	640
N11	—	—	—	—	—	—	—	—	—	455	610	730
S1	22	29	35	—	—	—	—	—	—	—	—	—
S2	18	23	28	—	—	—	—	—	—	—	—	—
S3	16	21	25	—	—	—	—	—	—	—	—	—
S11	31	41	49	—	—	—	—	—	—	—	—	—
S12	23	31	38	—	—	—	—	—	—	—	—	—
S13	19	25	30	—	—	—	—	—	—	—	—	—

R220.53-15

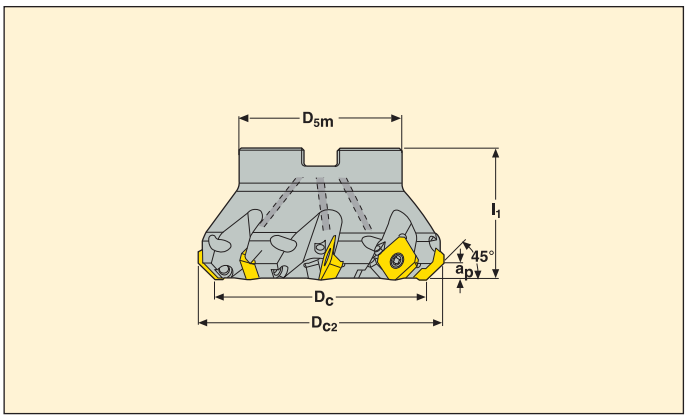

- For insert selection and cutting data recommendations, see page(s) 153–154
- For complete insert programme, see page(s) 622

Pitch	Part No.		Type of mounting	Dimensions in mm a_p	D_c	D_{c2}	D_{5m}	dm_m	l_1		KG		Insert
Normal													
	R220.53	-0063-15-5A	Arbor	7,5	63	78	47	22	40	5	0,6	8300	SE.X1505
		-0080-15-6A	Arbor	7,5	80	96	62	27	50	6	1,2	7400	SE.X1505
		-0100-15-7A	Arbor	7,5	100	116	77	32	50	7	1,8	6600	SE.X1505
		-0125-15-8A	Arbor	7,5	125	141	90	50	63	8	3,3	5900	SE.X1505
		-8160-15-10	Arbor	7,5	160	176	90	40	63	10	4,8	5200	SE.X1505
		-8200-15-12	Arbor	7,5	200	216	130	60	63	12	7,7	4700	SE.X1505

Spare Parts

For cutter	Insert screw	Insert key	Arbor screw
		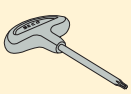	
R220.53-0063	C05013-T20P	T20P-4	220.17-696
R220.53-0080-0200	C05013-T20P	T20P-4	–

Please check availability in current price and stock-list
Torque value 5,0 Nm, Torque keys, see page 690

R220.53-15

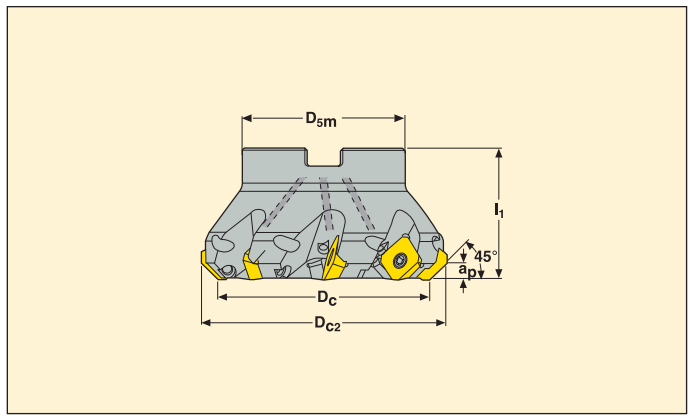

- For insert selection and cutting data recommendations, see page(s) 153–154
- For complete insert programme, see page(s) 622

Pitch	Part No.	Type of mounting	Dimensions in mm a_p	D_c	D_{c2}	D_{5m}	dm_m	l_1		KG		Insert
Close												
	R220.53 -0080-15-7A	Arbor	7,5	80	96	62	27	50	7	1,2	7400	SE.X1505
	-0100-15-9A	Arbor	7,5	100	116	77	32	50	9	1,8	6600	SE.X1505
	-0125-15-10A	Arbor	7,5	125	141	90	40	63	10	3,2	5900	SE.X1505
	-8160-15-14	Arbor	7,5	160	176	90	40	63	14	4,7	5200	SE.X1505

Spare Parts

For cutter	Insert screw	Insert key
		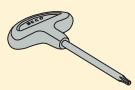
R220.53-0080-8160	C05013-T20P	T20P-4

Please check availability in current price and stock-list
Torque value 5,0 Nm, Torque keys, see page 690

R220.53-15C

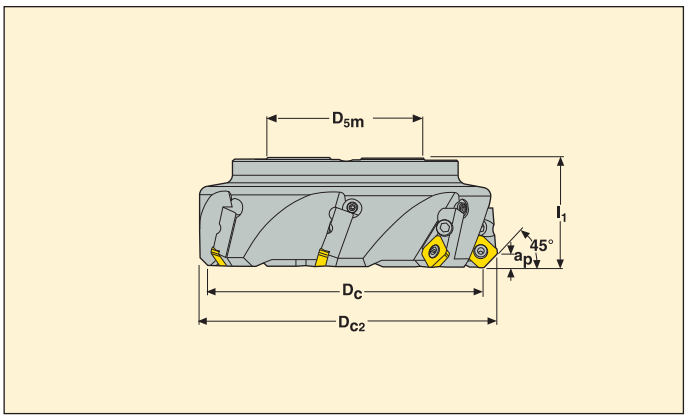

- For insert selection and cutting data recommendations, see page(s) 153–154
- For complete insert programme, see page(s) 622

Pitch	Part No.	Type of mounting	Dimensions in mm a_p	D_c	D_{c2}	D_{5m}	dm_m	l_1		KG		Insert
Normal												
	R220.53 -0080-15-5C	Arbor	7,5	80	96	62	27	50	5	1,7	7400	SE.X1505
	-0100-15-6C	Arbor	7,5	100	116	77	32	50	6	2,6	6600	SE.X1505
	-0125-15-8C	Arbor	7,5	125	141	90	40	63	8	4,2	5900	SE.X1505
	-8160-15-10C	Arbor	7,5	160	176	90	40	63	10	6,6	5200	SE.X1505
	-8200-15-12C	Arbor	7,5	200	216	130	60	63	12	9,8	4700	SE.X1505
	-8250-15-16C	Arbor	7,5	250	260	130	60	63	16	17,1	4200	SE.X1505
	-8315-15-18C	Arbor	7,5	315	331	225	60	80	18	38,0	3700	SE.X1505
Coarse												
	R220.53 -8160-15-7C	Arbor	7,5	160	176	90	40	63	7	6,5	5200	SE.X1505
	-8200-15-8C	Arbor	7,5	200	216	130	60	63	8	9,4	4700	SE.X1505
	-8250-15-10C	Arbor	7,5	250	266	130	60	63	10	17,0	4200	SE.X1505
	-8315-15-12C	Arbor	7,5	315	331	225	60	80	12	32,6	3700	SE.X1505
	-8400-15-16C	Arbor	7,5	400	416	225	60	80	16	58,0	3300	SE.X1505
	-8500-15-20C	Arbor	7,5	500	516	225	60	80	20	91,0	2900	SE.X1505

Spare Parts

For cutter	Setting gauge	Insert screw	Insert key	Cassette screw	Cassette
			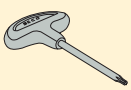		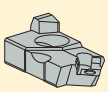
R220.53-..	AU1114T-T15P	C05010-T20P	T20P-4	FS96018	SE15AR-53

Please check availability in current price and stock-list
Torque value 5,0 Nm, Torque keys, see page 690

R220.53-15C

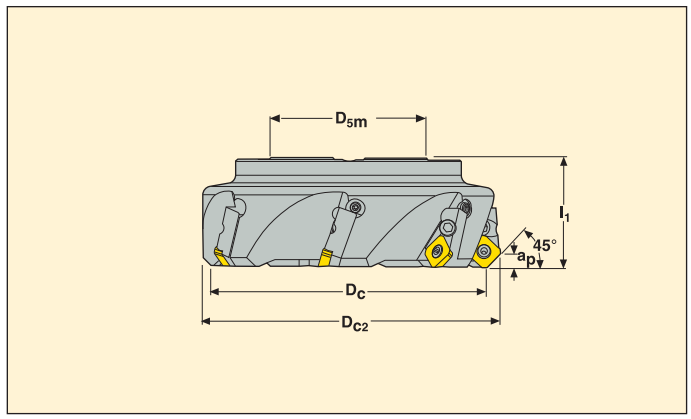

- For insert selection and cutting data recommendations, see page(s) 153–154
- For complete insert programme, see page(s) 622

Pitch	Part No.	Type of mounting	Dimensions in mm a_p	D_c	D_{c2}	D_{5m}	dm_m	l_1		KG		Insert
Close												
	R220.53 -0080-15-6C	Arbor	7,5	80	96	62	27	50	6	1,7	7400	SE.X1505
	-0100-15-8C	Arbor	7,5	100	116	77	27	50	8	2,5	6600	SE.X1505
	-0125-15-10C	Arbor	7,5	125	141	90	40	63	10	4,2	5900	SE.X1505
	-8160-15-14C	Arbor	7,5	160	176	90	40	63	14	6,6	5200	SE.X1505

Spare Parts

For cutter	Setting gauge	Insert screw	Insert key	Cassette screw	Cassette
R220.53-..	AU1114T-T15P	C05010-T20P	T20P-4	FS96018	SE15AR-53

Please check availability in current price and stock-list
Torque value 5,0 Nm, Torque keys, see page 690

R220.53-15 – Insert selection

SMG		a_p	f_z		
			100%	30%	10%
P1	SEMX1505AFTN-M18 MP2500	4,5	0,36	0,40	0,60
P2	SEMX1505AFTN-M18 MP2500	4,5	0,36	0,40	0,60
P3	SEMX1505AFTN-M18 MP2500	4,5	0,34	0,38	0,60
P4	SEMX1505AFTN-M18 MP2500	4,5	0,34	0,36	0,55
P5	SEMX1505AFTN-M18 MP2500	4,5	0,34	0,36	0,55
P6	SEMX1505AFTN-M18 MP2500	4,5	0,32	0,36	0,55
P7	SEMX1505AFTN-M18 T350M	4,5	0,32	0,36	0,55
P8	SEMX1505AFTN-M18 T350M	4,5	0,34	0,38	0,60
P11	SEMX1505AFTN-M18 T350M	4,5	0,32	0,36	0,55
M1	SEEX1505AFN-M12 F40M	4,5	0,24	0,26	0,40
M2	SEEX1505AFN-M12 F40M	4,5	0,22	0,24	0,36
M3	SEEX1505AFN-M12 F40M	3,5	0,18	0,19	0,30
M4	SEEX1505AFTN-M17 T350M	2,5	0,22	0,24	0,36
M5	SEEX1505AFTN-M17 T350M	2,5	0,22	0,24	0,36
K1	SEMX1505AFTN-M18 MK2050	4,5	0,36	0,40	0,60
K2	SEMX1505AFTN-M18 MK2050	4,5	0,34	0,36	0,55
K3	SEMX1505AFTN-M18 MK2050	4,5	0,34	0,36	0,55
K4	SEMX1505AFTN-M18 MK2050	4,5	0,34	0,36	0,55
K5	SEMX1505AFTN-M18 MK2050	4,5	0,30	0,32	0,50
K6	SEMX1505AFTN-M18 MK2050	4,5	0,34	0,36	0,55
K7	SEMX1505AFTN-M18 MK2050	4,5	0,30	0,32	0,50
N1	SEEX1505AFN-E10 H25	4,5	0,26	0,28	0,44
N2	SEEX1505AFN-E10 H25	4,5	0,26	0,28	0,44
N3	SEEX1505AFN-E10 H25	4,5	0,26	0,28	0,44
N11	SEEX1505AFN-E10 H25	4,5	0,26	0,28	0,44
S1	SEEX1505AFN-M12 T350M	2,5	0,15	0,17	0,26
S2	SEEX1505AFN-M12 T350M	2,5	0,15	0,17	0,26
S3	SEEX1505AFN-M12 T350M	2,5	0,14	0,16	0,24
S11	SEEX1505AFN-M12 MS2050	3,0	0,18	0,19	0,30
S12	SEEX1505AFN-M12 MS2050	3,0	0,18	0,19	0,30
S13	SEEX1505AFN-M12 MS2050	2,5	0,15	0,17	0,26
H5	SEMX1505AFTN-MD20 MP1500	3,5	0,26	0,28	0,42
H8	SEMX1505AFTN-MD20 MP1500	3,0	0,19	0,20	0,32
H11	SEMX1505AFTN-MD20 MP1500	3,5	0,26	0,28	0,42
H12	SEMX1505AFTN-MD20 MP1500	3,5	0,26	0,28	0,42
H21	SEMX1505AFTN-MD20 MP1500	3,0	0,19	0,20	0,32

SMG = Seco material group
f_z = mm/tooth
v_c= m/min
a_e/D_c = %
All cutting data are start values

R220.53-15 – Cutting data v_c = (m/min)

	MP1500			MP2500			MP3000			T350M			F40M			MK1500		
SMG	100%	30%	10%	100%	30%	10%	100%	30%	10%	100%	30%	10%	100%	30%	10%	100%	30%	10%
P1	280	385	455	245	340	405	220	295	350	215	295	355	185	255	305	—	—	—
P2	270	365	435	240	325	385	210	290	340	210	285	335	185	245	290	—	—	—
P3	240	320	385	210	285	340	185	250	300	185	250	295	160	215	255	—	—	—
P4	210	290	335	185	255	300	165	225	265	160	225	260	140	195	225	—	—	—
P5	200	275	330	180	245	295	160	215	255	155	215	255	135	185	225	—	—	—
P6	230	310	375	205	275	330	180	240	285	180	240	290	155	210	250	—	—	—
P7	215	290	350	195	260	310	170	230	270	170	225	270	145	195	235	—	—	—
P8	200	270	320	180	240	285	155	210	255	155	210	250	135	180	215	—	—	—
P11	210	285	340	185	250	305	165	220	260	165	220	265	140	190	230	—	—	—
M1	—	—	—	175	235	275	160	215	255	160	220	260	145	200	235	—	—	—
M2	—	—	—	145	195	235	135	180	210	135	185	220	120	165	200	—	—	—
M3	—	—	—	115	160	190	110	145	175	110	145	175	100	135	160	—	—	—
M4	—	—	—	90	125	150	85	115	135	85	115	140	80	105	125	—	—	—
M5	—	—	—	75	105	125	70	95	115	70	95	115	65	85	105	—	—	—
K1	215	290	345	190	260	305	170	230	270	165	225	265	145	195	230	270	365	430
K2	190	260	315	170	230	280	150	205	240	145	200	245	130	175	210	240	330	395
K3	160	220	265	145	195	235	130	175	205	125	170	205	110	150	180	200	280	335
K4	155	210	255	135	185	225	120	165	195	120	165	195	105	140	170	195	265	320
K5	95	130	155	85	115	135	75	100	120	75	100	120	65	90	105	120	165	190
K6	135	185	225	120	165	200	110	145	170	105	145	175	90	125	150	170	235	280
K7	125	165	195	110	150	175	95	130	150	95	130	150	80	110	130	155	210	245
N1	—	—	—	690	940	1125	610	820	1000	—	—	—	520	710	850	—	—	—
N2	—	—	—	560	760	900	495	660	810	—	—	—	425	580	680	—	—	—
N3	—	—	—	370	510	600	330	440	540	—	—	—	280	385	455	—	—	—
N11	—	—	—	425	580	690	375	510	610	—	—	—	320	440	520	—	—	—
S1	—	—	—	45	60	70	40	55	65	40	55	65	36	49	60	—	—	—
S2	—	—	—	36	48	60	32	43	50	32	43	50	29	39	47	—	—	—
S3	—	—	—	32	43	50	28	38	45	29	38	46	26	35	42	—	—	—
S11	—	—	—	60	85	100	55	75	90	55	75	90	50	65	80	—	—	—
S12	—	—	—	35	48	60	32	43	50	32	43	50	29	39	47	—	—	—
S13	—	—	—	29	39	47	26	34	41	26	35	42	24	31	38	—	—	—
H5	45	60	75	36	49	60	33	45	55	35	47	55	30	41	49	—	—	—
H8	50	65	80	40	55	65	36	48	60	38	50	60	33	44	55	—	—	—
H11	60	80	95	47	65	75	43	60	70	45	60	70	39	50	65	—	—	—
H12	95	125	150	75	100	120	70	95	110	70	95	115	65	85	100	—	—	—
H21	50	65	80	40	55	65	36	48	60	38	50	60	33	44	55	—	—	—

R220.53-15 – Cutting data v_c = (m/min)

	MK1500			MK2050			MS2050			H25		
SMG	100%	30%	10%	100%	30%	10%	100%	30%	10%	100%	30%	10%
P1	—	—	—	245	335	400	250	320	365	—	—	—
P2	—	—	—	235	320	380	245	315	355	—	—	—
P3	—	—	—	210	280	335	220	270	310	—	—	—
P4	—	—	—	185	250	295	190	240	270	—	—	—
P5	—	—	—	175	240	290	185	230	260	—	—	—
P6	—	—	—	200	270	325	205	260	290	—	—	—
P7	—	—	—	190	255	305	195	245	275	—	—	—
P8	—	—	—	175	235	280	185	225	260	—	—	—
P11	—	—	—	185	245	300	190	235	270	—	—	—
M1	—	—	—	—	—	—	215	275	310	—	—	—
M2	—	—	—	—	—	—	180	225	255	—	—	—
M3	—	—	—	—	—	—	140	170	190	—	—	—
M4	—	—	—	—	—	—	110	125	140	—	—	—
M5	—	—	—	—	—	—	90	105	115	—	—	—
K1	270	365	430	255	345	410	245	315	360	—	—	—
K2	240	330	395	225	310	375	220	280	315	—	—	—
K3	200	280	335	190	265	315	185	235	265	—	—	—
K4	195	265	320	185	250	300	180	225	255	—	—	—
K5	120	165	190	115	155	180	110	135	150	—	—	—
K6	170	235	280	160	220	265	155	200	225	—	—	—
K7	155	210	245	145	200	235	140	175	195	—	—	—
N1	—	—	—	—	—	—	—	—	—	670	920	1075
N2	—	—	—	—	—	—	—	—	—	540	740	870
N3	—	—	—	—	—	—	—	—	—	365	495	580
N11	—	—	—	—	—	—	—	—	—	415	570	670
S1	—	—	—	—	—	—	39	50	60	—	—	—
S2	—	—	—	—	—	—	31	40	48	—	—	—
S3	—	—	—	—	—	—	28	36	44	—	—	—
S11	—	—	—	—	—	—	49	70	80	40	55	65
S12	—	—	—	—	—	—	37	50	60	31	42	50
S13	—	—	—	—	—	—	33	43	50	—	—	—
H5	—	—	—	—	—	—	—	—	—	—	—	—
H8	—	—	—	—	—	—	—	—	—	—	—	—
H11	—	—	—	—	—	—	—	—	—	—	—	—
H12	—	—	—	—	—	—	—	—	—	—	—	—
H21	—	—	—	—	—	—	—	—	—	—	—	—

Octomill 220.43-07W

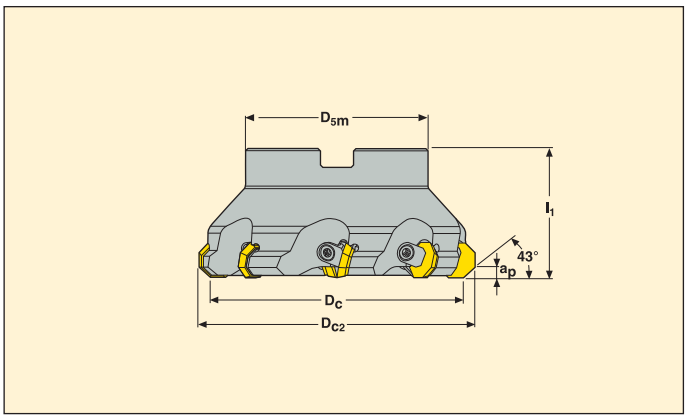

- For insert selection and cutting data recommendations, see page(s) 159–161
- For complete insert programme, see page(s) 611

Pitch	Part No.	Type of mounting	Dimensions in mm a_p	D_c	D_{c2}	D_{5m}	dm_m	l_1		KG		Insert
Normal												
	R220.43 -0050-07W	Arbor	5	50	62	47	22	60	4	0,4	6300	OFE.070405
	-0063-07W	Arbor	5	63	75	47	22	40	4	0,6	5600	OFE.070405
	-0080-07W	Arbor	5	80	92	62	27	50	5	1,3	5000	OFE.070405
	-0100-07W	Arbor	5	100	112	77	32	50	6	1,8	4400	OFE.070405
	-0125-07W	Arbor	5	125	137	90	40	63	8	3,2	4000	OFE.070405
	-8160-07W	Arbor	5	160	172	90	40	63	10	5,1	3500	OFE.070405

Spare Parts

For cutter	Wedge screw	Wedge key	Insert wedge	Arbor screw
R220.43-0050	LD8018-T25P	T25P-4	334.5-640	220.17-696
R220.43-0063	LD8018-T25P	T25P-4	CW0810	MF6S10X40
R220.43-0080	LD8018-T25P	T25P-4	CW0810	MC6S12X35
R220.43-0100-8160	LD8018-T25P	T25P-4	CW0810	–

Please check availability in current price and stock-list
Torque value 6,0 Nm. Torque keys, see page 690

Octomill 220.43-07T

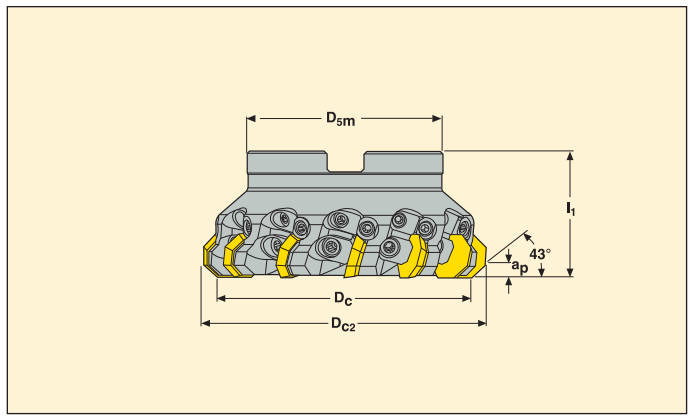

- For insert selection and cutting data recommendations, see page(s) 159–161
- For complete insert programme, see page(s) 611

Pitch	Part No.		Type of mounting	Dimensions in mm a_p	D_c	D_{c2}	D_{5m}	dm_m	l_1		KG		Insert
Super close													
	R220.43	-0063-07-6T	Arbor	5	63	75	47	22	50	6	0,8	5600	OFE.070405
		-0080-07-9T	Arbor	5	80	92	62	27	50	9	1,2	5000	OFE.070405
		-0100-07-12T	Arbor	5	100	112	77	32	50	12	1,6	4400	OFE.070405
		-0125-07-15T	Arbor	5	125	137	90	40	63	15	3,0	4000	OFE.070405

Spare Parts

For cutter	Wedge screw	Wedge clamp axial adj.	Setting screw (axial)	Setting key	Insert wedge	Insert/clamp key	Axial setting unit	Arbor screw
R220.43-0063	LD8020-T25P	CW0608	LD6019-T15P	T15P-4ST	334.5-640	T25P-4	AS6011	MF6S10X40
R220.43-0080	LD8020-T25P	CW0608	LD6019-T15P	T15P-4ST	334.5-640	T25P-4	AS6011	MC6S12X35
R220.43-0100-0125	LD8020-T25P	CW0608	LD6019-T15P	T15P-4ST	334.5-640	T25P-4	AS6011	–

Please check availability in current price and stock-list
Torque value 6,0 Nm. Torque keys, see page 690

Octomill 220.43-07C/CG

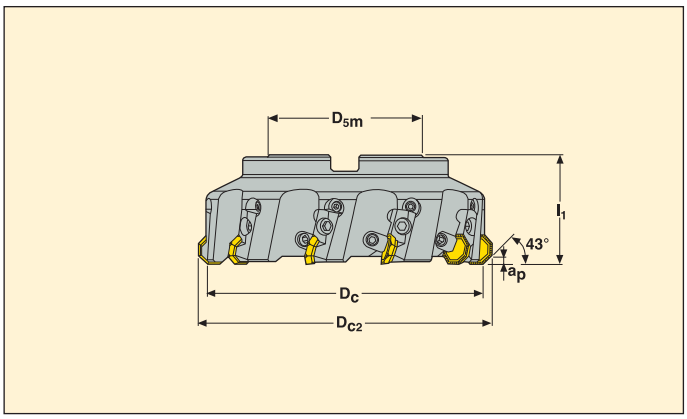

- For insert selection and cutting data recommendations, see page(s) 159–161
- For complete insert programme, see page(s) 611

Pitch	Part No.	Type of mounting	Dimensions in mm a_p	D_c	D_{c2}	D_{5m}	dm_m	l_1		KG		Insert
Normal												
	R220.43 -0100-07C	Arbor	5	100	112	77	32	50	6	2,3	4300	OFE.070405
	-0125-07C	Arbor	5	125	137	90	40	63	8	3,6	3800	OFE.070405
	-8160-07C	Arbor	5	160	172	90	40	63	10	5,7	3300	OFE.070405
	-8200-07C	Arbor	5	200	212	130	60	63	12	8,3	3000	OFE.070405
	-8250-07C	Arbor	5	250	262	130	60	63	16	14,3	2700	OFE.070405
Coarse												
	R220.43 -8160-07CG	Arbor	5	160	172	90	40	63	7	5,8	3300	OFE.070405

Spare Parts

For cutter	Wedge screw	Wedge key	Setting gauge	Insert wedge	Cassette screw	Cassette	Arbor screw
R220.43-0100	LD8020-T25P	T25P-4	AU1114T-T15P	CW0810	FS96018	OF07AR	220.17-694
R220.43-0125-8500	LD8020-T25P	T25P-4	AU1114T-T15P	CW0810	FS96018	OF07AR	–

Please check availability in current price and stock-list
Torque value 6,0 Nm. Torque keys, see page 690

Octomill 220.43-07T

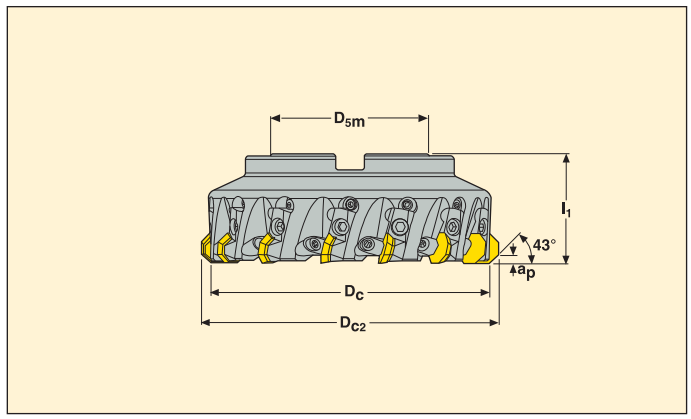

- For insert selection and cutting data recommendations, see page(s) 159–161
- For complete insert programme, see page(s) 611

Pitch	Part No.	Type of mounting	Dimensions in mm a_p	D_c	D_{c2}	D_{5m}	dm_m	l_1		KG		Insert
Close												
	R220.43 -0125-07CT	Arbor	5	125	137	90	40	63	10	3,5	3800	OFE.070405
	-8160-07CT	Arbor	5	160	172	90	40	63	14	5,6	3300	OFE.070405
	-8200-07CT	Arbor	5	200	212	130	60	63	18	8,1	3000	OFE.070405
	-8250-07CT	Arbor	5	250	262	130	60	63	22	16,9	2700	OFE.070405
	-8315-07CT	Arbor	5	315	327	225	60	80	28	28,0	2400	OFE.070405

Spare Parts

For cutter	Wedge screw	Wedge key	Setting gauge	Insert wedge	Cassette screw	Cassette
R220.43-0125-8315CT	LD8020-T25P	T25P-4	AU1114T-T15P	334.5-640	FS96018	OF07AR

Please check availability in current price and stock-list
Torque value 6,0 Nm. Torque keys, see page 690

R220.43-07 – Insert selection

SMG		a_p	f_z		
			100%	30%	10%
P1	OFMR070405TR-ME13 MP2500	3,0	0,26	0,30	0,44
P2	OFMR070405TR-ME13 MP2500	3,0	0,28	0,30	0,46
P3	OFMR070405TR-ME13 MP2500	3,0	0,26	0,28	0,44
P4	OFMR070405TR-M15 MP2500	3,0	0,30	0,32	0,48
P5	OFMR070405TR-M15 MP2500	3,0	0,28	0,32	0,48
P6	OFMR070405TR-M15 MP2500	3,0	0,28	0,30	0,48
P7	OFMR070405TR-M15 T350M	3,0	0,28	0,30	0,48
P8	OFMR070405TR-M15 T350M	3,0	0,30	0,32	0,50
P11	OFMR070405TR-M15 T350M	3,0	0,28	0,30	0,48
M1	OFMR070405TR-ME13 F40M	3,0	0,28	0,30	0,46
M2	OFMR070405TR-ME13 F40M	3,0	0,24	0,28	0,42
M3	OFMR070405TR-ME13 F40M	2,5	0,20	0,22	0,34
M4	OFMR070405TR-ME13 T350M	1,8	0,17	0,19	0,28
M5	OFER070405TN-M16 MM4500	1,8	0,22	0,24	0,36
K1	OFER070405TN-M16 MK2050	3,0	0,34	0,36	0,55
K2	OFER070405TN-M16 MK2050	3,0	0,30	0,34	0,50
K3	OFER070405TN-M16 MK2050	3,0	0,30	0,34	0,50
K4	OFER070405TN-M16 MK2050	3,0	0,30	0,34	0,50
K5	OFMR070405TR-M15 MK1500	3,0	0,26	0,28	0,44
K6	OFMR070405TR-M15 MK1500	3,0	0,28	0,32	0,48
K7	OFMR070405TR-M15 MK1500	3,0	0,26	0,28	0,44
N1	OFER070405N-E07 H15	3,0	0,19	0,20	0,32
N2	OFER070405N-E07 H15	3,0	0,19	0,20	0,32
N3	OFER070405N-E07 F15M	—	—	—	—
N11	OFER070405N-E07 F15M	—	—	—	—
S1	OFMR070405TR-ME13 T350M	1,8	0,17	0,19	0,28
S2	OFMR070405TR-ME13 T350M	1,8	0,17	0,19	0,28
S3	OFMR070405TR-ME13 T350M	1,8	0,16	0,18	0,26
S11	OFMR070405TR-ME13 F40M	2,0	0,20	0,22	0,34
S12	OFMR070405TR-ME13 F40M	2,0	0,20	0,22	0,34
S13	OFMR070405TR-ME13 F40M	1,8	0,17	0,19	0,28
H5	OFEN070405TN-D18 MP1500	2,5	0,24	0,26	0,40
H8	OFEN070405TN-D18 MP1500	2,0	0,18	0,19	0,30
H11	OFEN070405TN-D18 MP1500	2,5	0,24	0,26	0,40
H12	OFEN070405TN-D18 MP1500	2,5	0,24	0,26	0,40
H21	OFEN070405TN-D18 MP1500	2,0	0,18	0,19	0,30

SMG = Seco material group
f_z = mm/tooth
v_c= m/min
a_e/D_c = %
All cutting data are start values

R220.43-07 – Cutting data v_c = (m/min)

	MP1500			MP2500			MP3000			F15M			F40M			MK1500		
SMG	100%	30%	10%	100%	30%	10%	100%	30%	10%	100%	30%	10%	100%	30%	10%	100%	30%	10%
P1	285	380	460	255	340	405	270	365	430	330	435	520	190	255	310	—	—	—
P2	275	370	435	240	330	385	265	355	415	315	420	500	185	250	290	—	—	—
P3	240	325	385	215	290	340	230	305	360	275	370	430	160	220	260	—	—	—
P4	210	285	345	185	255	305	205	270	325	240	325	390	140	195	230	—	—	—
P5	205	275	330	185	245	290	195	265	310	235	310	370	140	185	220	—	—	—
P6	230	315	370	205	280	325	220	295	345	265	355	415	155	210	245	—	—	—
P7	220	295	345	195	260	310	205	280	325	250	335	395	145	200	235	—	—	—
P8	200	275	325	180	245	285	190	255	305	230	310	365	135	185	215	—	—	—
P11	210	290	335	190	255	300	200	270	320	245	325	380	145	195	225	—	—	—
M1	—	—	—	175	235	275	200	265	310	255	340	405	150	200	235	—	—	—
M2	—	—	—	145	195	235	165	220	260	210	280	335	125	165	200	—	—	—
M3	—	—	—	120	160	190	130	175	205	170	225	265	100	135	160	—	—	—
M4	—	—	—	95	125	145	105	135	160	130	175	205	80	105	125	—	—	—
M5	—	—	—	80	105	125	85	110	135	110	145	170	65	85	105	—	—	—
K1	215	295	345	190	260	305	210	280	325	250	335	400	145	200	230	270	370	430
K2	195	260	310	175	230	275	185	250	295	225	295	350	130	175	210	245	325	390
K3	165	220	265	145	195	235	155	210	250	190	250	300	110	150	175	210	275	330
K4	160	210	250	140	185	225	150	200	235	180	240	285	105	140	170	200	265	315
K5	95	130	155	85	115	135	90	120	145	110	145	175	65	85	105	120	165	195
K6	140	185	220	125	165	195	130	180	210	160	210	250	95	125	150	175	230	280
K7	125	165	195	110	150	175	115	155	185	140	190	220	85	110	130	155	210	245
N1	—	—	—	700	950	1150	770	1025	1225	920	1250	1450	530	720	870	—	—	—
N2	—	—	—	570	770	920	620	820	990	740	1000	1175	430	580	700	—	—	—
N3	—	—	—	380	510	620	415	550	660	495	670	790	285	385	465	—	—	—
N11	—	—	—	435	580	700	475	620	750	570	770	900	330	440	530	—	—	—
S1	—	—	—	45	60	70	48	65	75	60	80	95	37	49	60	—	—	—
S2	—	—	—	36	49	60	39	50	60	49	65	75	30	39	47	—	—	—
S3	—	—	—	32	43	50	34	44	55	43	55	70	26	35	41	—	—	—
S11	—	—	—	65	85	100	65	90	105	85	115	135	50	70	80	—	—	—
S12	—	—	—	37	49	60	39	50	60	49	65	80	30	40	47	—	—	—
S13	—	—	—	29	39	46	31	41	49	39	50	60	24	32	38	—	—	—
H5	46	60	75	37	49	60	40	55	65	50	70	80	31	41	49	—	—	—
H8	50	65	80	40	55	65	43	55	65	55	70	85	33	44	55	—	—	—
H11	60	80	95	48	65	75	50	70	80	65	85	105	40	55	65	—	—	—
H12	95	125	150	75	100	125	85	110	130	105	140	165	65	85	100	—	—	—
H21	50	65	80	40	55	65	43	55	65	55	70	85	33	44	55	—	—	—

R220.43-07 – Cutting data v_c = (m/min)

	MK2050			MM4500			H15			MP1020		
SMG	100%	30%	10%	100%	30%	10%	100%	30%	10%	100%	30%	10%
P1	250	335	400	155	205	250	—	—	—	240	305	375
P2	240	325	380	150	200	235	—	—	—	215	300	335
P3	210	285	335	130	175	210	—	—	—	200	275	315
P4	185	250	300	115	155	185	—	—	—	175	240	290
P5	180	240	285	110	150	180	—	—	—	185	230	275
P6	200	275	320	125	170	200	—	—	—	210	280	310
P7	190	260	305	120	160	190	—	—	—	195	260	290
P8	175	240	280	110	150	175	—	—	—	170	230	265
P11	185	250	295	115	155	185	—	—	—	190	255	285
M1	—	—	—	130	175	205	—	—	—	—	—	—
M2	—	—	—	110	145	170	—	—	—	—	—	—
M3	—	—	—	90	120	140	—	—	—	—	—	—
M4	—	—	—	70	90	110	—	—	—	—	—	—
M5	—	—	—	55	75	90	—	—	—	—	—	—
K1	255	350	410	—	—	—	—	—	—	—	—	—
K2	235	310	370	—	—	—	—	—	—	—	—	—
K3	195	260	315	—	—	—	—	—	—	—	—	—
K4	190	250	300	—	—	—	—	—	—	—	—	—
K5	115	155	180	—	—	—	—	—	—	—	—	—
K6	165	220	265	—	—	—	—	—	—	—	—	—
K7	145	200	235	—	—	—	—	—	—	—	—	—
N1	—	—	—	—	—	—	730	990	1150	—	—	—
N2	—	—	—	—	—	—	590	800	930	—	—	—
N3	—	—	—	—	—	—	395	530	620	—	—	—
N11	—	—	—	—	—	—	450	610	710	—	—	—
S1	—	—	—	21	28	33	—	—	—	—	—	—
S2	—	—	—	17	22	27	—	—	—	—	—	—
S3	—	—	—	15	20	23	—	—	—	—	—	—
S11	—	—	—	29	39	46	—	—	—	—	—	—
S12	—	—	—	22	30	36	—	—	—	—	—	—
S13	—	—	—	18	24	28	—	—	—	—	—	—
H3	—	—	—	—	—	—	—	—	—	—	—	—
H5	—	—	—	—	—	—	—	—	—	—	—	—
H7	—	—	—	—	—	—	—	—	—	—	—	—
H8	—	—	—	—	—	—	—	—	—	—	—	—
H11	—	—	—	—	—	—	—	—	—	—	—	—
H12	—	—	—	—	—	—	—	—	—	—	—	—
H21	—	—	—	—	—	—	—	—	—	—	—	—
H31	—	—	—	—	—	—	—	—	—	—	—	—

Octomill 220.43-05

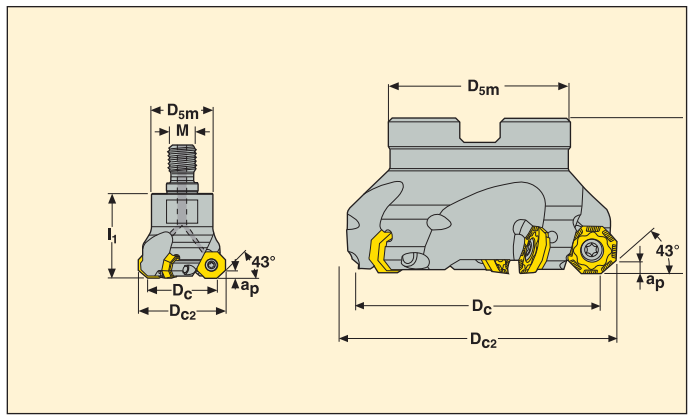

- For insert selection and cutting data recommendations, see page(s) 166 - 167
- For complete insert programme, see page(s) 610

Pitch	Part No.		Type of mounting	Dimensions in mm a_p	D_c	D_{c2}	D_{5m}	dm_m	M	l_1		KG		Insert
Normal														
	R217.43	-1632.RE-05.3A	Combimaster	3,5	32	40	30		M16	40	3	0,3	14800	OFEX/OFMT05
		-1642.RE-05.3A	Combimaster	3,5	42	50	30		M16	40	3	0,3	13000	OFEX/OFMT05
	R220.43	-0032-05	Arbor	3,5	32	41	35	16	–	40	3	0,2	14800	OFEX/OFMT05
		-0040-05	Arbor	3,5	40	49	35	16	–	40	3	0,3	13200	OFEX/OFMT05
		-0050-05	Arbor	3,5	50	59	47	22	–	40	4	0,4	11900	OFEX/OFMT05
		-0063-05	Arbor	3,5	63	72	47	22	–	40	5	0,6	10600	OFEX/OFMT05
		-0080-05	Arbor	3,5	80	89	62	27	–	50	6	1,1	9400	OFEX/OFMT05
		-0100-05	Arbor	3,5	100	109	77	32	–	50	7	1,8	8400	OFEX/OFMT05
		-0125-05	Arbor	3,5	125	134	90	40	–	63	8	3,3	7500	OFEX/OFMT05
		-8160-05	Arbor	3,5	160	169	90	40	–	63	10	5,1	6600	OFEX/OFMT05

Spare Parts

For cutter	Insert screw	Insert key	Arbor screw
R217.43-..	C04008-T15P	T15P-3	–
R220.43-0032	C04008-T15P	T15P-3	220.17-690
R220.43-0040	C04008-T15P	T15P-3	TCEI0825
R220.43-0050-0063	C04008-T15P	T15P-3	220.17-692
R220.43-0080-0160	C04008-T15P	T15P-3	–

Please check availability in current price and stock-list
Torque value 3,5 Nm. Torque keys, see page 690

Octomill 220.43-05

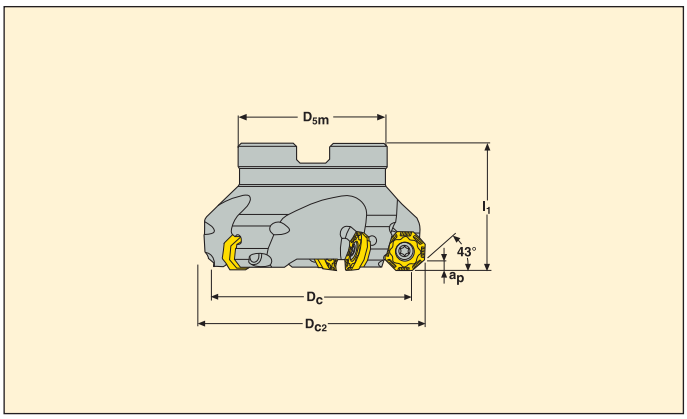

- For insert selection and cutting data recommendations, see page(s) 166 - 167
- For complete insert programme, see page(s) 610

Pitch	Part No.	Type of mounting	Dimensions in mm a_p	D_c	D_{c2}	D_{5m}	dm_m	l_1		KG		Insert
Close												
	R220.43 -0040-05-4A	Arbor	3,5	40	49	35	16	40	4	0,3	13200	OFEX/OFMT05
	-0050-05-5A	Arbor	3,5	50	59	47	22	40	5	0,4	11900	OFEX/OFMT05
	-0063-05-6A	Arbor	3,5	63	72	47	22	40	6	0,5	10600	OFEX/OFMT05
	-0080-05-8A	Arbor	3,5	80	89	62	27	50	8	1,1	9400	OFEX/OFMT05

Spare Parts

For cutter	Insert screw	Insert key	Arbor screw
		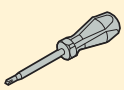	
R220.43-0040	C04008-T15P	T15P-3	TCEI0825
R220.43-0050-0063	C04008-T15P	T15P-3	220.17-692
R220.43-0080-0160	C04008-T15P	T15P-3	–

Please check availability in current price and stock-list
Torque value 3,5 Nm. Torque keys, see page 690

Octomill 220.43-05C

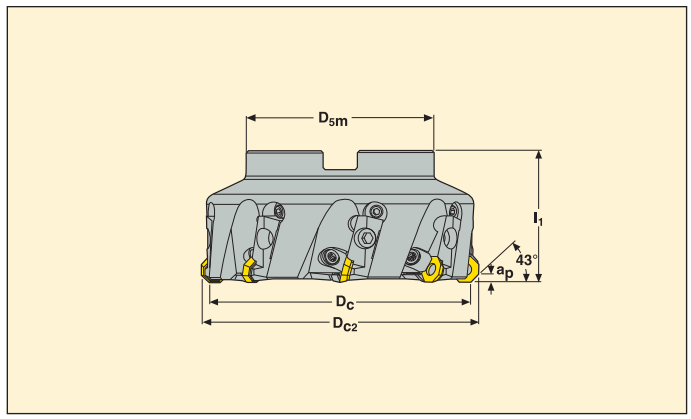

- For insert selection and cutting data recommendations, see page(s) 166 - 167
- For complete insert programme, see page(s) 610

Pitch	Part No.	Type of mounting	Dimensions in mm a_p	D_c	D_{c2}	D_{5m}	dm_m	l_1		KG		Insert
Normal												
	R220.43 -0100-05C	Arbor	3,5	100	109	77	32	50	6	2,5	4300	OFEX05T305
	-0125-05C	Arbor	3,5	125	134	90	40	63	8	3,7	3800	OFEX05T305
	-8160-05C	Arbor	3,5	160	169	90	40	63	10	5,8	3300	OFEX05T305
	-8200-05C	Arbor	3,5	200	209	130	60	63	12	8,4	3000	OFEX05T305
	-8250-05C	Arbor	3,5	250	259	130	60	63	16	14,3	2700	OFEX05T305
	-8315-05C	Arbor	3,5	315	324	225	60	80	20	28,0	2400	OFEX05T305
Coarse												
	R220.43 -8160-05CG	Arbor	3,5	160	169	90	40	63	7	5,9	3300	OFEX05T305

Spare Parts

For cutter	Wedge screw	Setting gauge	Key	Insert wedge	Cassette screw	Cassette	Arbor screw
R220.43-0100	LD8020-T25P	AU1114T-T15P	T25P-4	CW0810	FS96018	OF05AR	220.17-694
R220.43-0125-8160C/CG	LD8020-T25P	AU1114T-T15P	T25P-4	CW0810	FS96018	OF05AR	–

Please check availability in current price and stock-list
Torque value 3,5 Nm. Torque keys, see page 690

Octomill 220.43-05CT

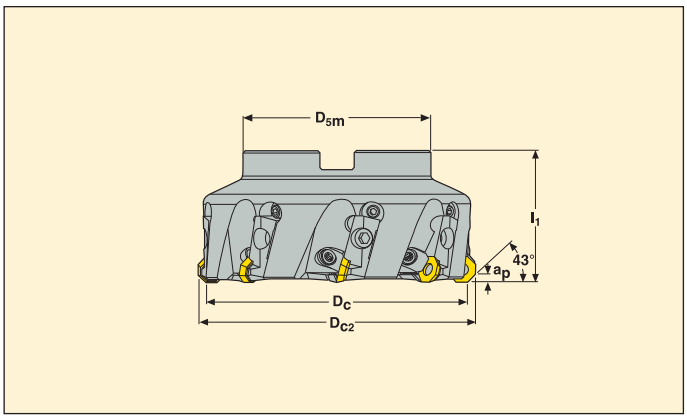

- For insert selection and cutting data recommendations, see page(s) 166 - 167
- For complete insert programme, see page(s) 610

Pitch	Part No.	Type of mounting	Dimensions in mm a_p	D_c	D_{c2}	D_{5m}	dm_m	l_1		KG		Insert
Close												
	R220.43 -0125-05CT	Arbor	3,5	125	134	90	40	63	10	4,0	3800	OFEX05T305
	-8160-05CT	Arbor	3,5	160	169	90	40	63	14	5,8	3300	OFEX05T305
	-8200-05CT	Arbor	3,5	200	209	130	60	63	18	7,4	3000	OFEX05T305
	-8315-05CT	Arbor	3,5	315	324	225	60	80	28	27,5	2400	OFEX05T305

Spare Parts

For cutter	Wedge screw	Setting gauge	Key	Insert wedge	Cassette screw	Cassette
			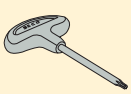			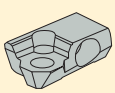
R220.43-0125-8315CT	LD8020-T25P	AU1114T-T15P	T25P-4	334.5-640	FS96018	OF05AR

Please check availability in current price and stock-list
Torque value 3,5 Nm. Torque keys, see page 690

R220.43-05 – Insert selection

SMG		a_p	f_z		
			100%	30%	10%
P1	OFEX05T305TN-M08 F40M	2,0	0,16	0,18	0,28
P2	OFEX05T305TN-ME07 F40M	2,0	0,15	0,16	0,24
P3	OFEX05T305TN-ME07 F40M	2,0	0,14	0,15	0,24
P4	OFEX05T305TN-M08 F40M	2,0	0,16	0,17	0,26
P5	OFEX05T305TN-M08 F40M	2,0	0,15	0,17	0,26
P6	OFEX05T305TN-M08 F40M	2,0	0,15	0,16	0,26
P7	OFEX05T305TN-M08 MP2500	2,0	0,15	0,16	0,26
P8	OFEX05T305TN-M08 MP2500	2,0	0,16	0,17	0,26
P11	OFEX05T305TN-M08 MP2500	2,0	0,15	0,16	0,26
M1	OFEX05T305TN-ME07 T350M	2,0	0,15	0,16	0,24
M2	OFEX05T305TN-ME07 T350M	2,0	0,13	0,15	0,22
M3	OFEX05T305TN-ME07 T350M	1,7	0,11	0,12	0,18
M4	OFEX05T305TN-ME07 T350M	1,3	0,095	0,10	0,16
M5	OFEX05T305TN-ME07 T350M	1,3	0,095	0,10	0,16
K1	OFEX05T305TN-M08 MK1500	2,0	0,17	0,18	0,28
K2	OFEX05T305TN-M08 MK1500	2,0	0,15	0,17	0,26
K3	OFEX05T305TN-M08 MK1500	2,0	0,15	0,17	0,26
K4	OFEX05T305TN-M08 MK1500	2,0	0,15	0,17	0,26
K5	OFEX05T305TN-D09 MP1500	2,0	0,15	0,17	0,26
K6	OFEX05T305TN-D09 MP1500	2,0	0,17	0,19	0,28
K7	OFEX05T305TN-D09 MP1500	2,0	0,15	0,17	0,26
N1	OFEX05T305N-E04 H15	2,0	0,11	0,12	0,18
N2	OFEX05T305N-E04 H15	2,0	0,11	0,12	0,18
N3	OFEX05T305N-E04 F15M	2,0	0,11	0,12	0,18
N11	OFEX05T305N-E04 F15M	2,0	0,11	0,12	0,18
S1	OFEX05T305TN-ME07 F40M	1,3	0,095	0,10	0,16
S2	OFEX05T305TN-ME07 F40M	1,3	0,095	0,10	0,16
S3	OFEX05T305TN-ME07 F40M	1,3	0,085	0,095	0,14
S11	OFEX05T305TN-ME07 F40M	1,4	0,11	0,12	0,18
S12	OFEX05T305TN-ME07 F40M	1,4	0,11	0,12	0,18
S13	OFEX05T305TN-ME07 F40M	1,3	0,095	0,10	0,16
H5	OFEX05T305TN-D09 MP1500	1,7	0,12	0,13	0,19
H8	OFEX05T305TN-D09 MP1500	1,4	0,090	0,095	0,15
H11	OFEX05T305TN-D09 MP1500	1,7	0,12	0,13	0,19
H12	OFEX05T305TN-D09 MP1500	1,7	0,12	0,13	0,19
H21	OFEX05T305TN-D09 MP1500	1,4	0,090	0,095	0,15

SMG = Seco material group
f_z = mm/tooth
v_c= m/min
a_e/D_c = %
All cutting data are start values

R220.43-05 – Cutting data v_c = (m/min)

	MP1500			MP2500			MK1500			F15M			T350M			F40M		
SMG	100%	30%	10%	100%	30%	10%	100%	30%	10%	100%	30%	10%	100%	30%	10%	100%	30%	10%
P1	330	445	530	305	405	475	—	—	—	375	490	580	265	350	415	270	355	420
P2	320	430	510	295	395	465	—	—	—	360	480	560	255	345	405	260	345	410
P3	280	375	445	255	345	405	—	—	—	315	415	490	225	300	355	225	300	355
P4	250	330	390	225	305	360	—	—	—	275	365	435	195	265	310	200	265	320
P5	240	315	380	220	290	340	—	—	—	265	350	415	190	250	300	195	255	305
P6	270	355	425	245	330	385	—	—	—	300	400	465	215	285	335	215	290	340
P7	255	335	400	230	310	360	—	—	—	285	375	440	200	270	315	205	275	320
P8	235	315	370	215	290	340	—	—	—	265	350	415	190	250	300	190	255	295
P11	245	325	390	225	300	350	—	—	—	275	365	425	195	265	305	200	265	310
M1	—	—	—	210	285	335	—	—	—	290	385	455	195	265	310	210	280	330
M2	—	—	—	175	230	275	—	—	—	240	315	370	165	215	255	175	230	275
M3	—	—	—	140	190	225	—	—	—	190	250	295	130	175	210	140	185	220
M4	—	—	—	110	145	170	—	—	—	145	190	225	100	135	160	105	145	170
M5	—	—	—	90	120	145	—	—	—	120	160	190	85	110	135	90	120	140
K1	255	340	400	230	310	370	330	440	520	285	380	445	200	270	320	205	275	325
K2	225	300	360	210	275	325	295	390	460	255	335	390	180	240	285	185	240	290
K3	190	255	305	175	230	275	250	330	390	215	280	330	155	200	240	155	205	245
K4	185	245	290	170	220	260	240	315	370	205	270	315	145	195	230	150	195	235
K5	115	150	175	100	135	165	145	195	230	125	165	195	90	120	140	90	120	140
K6	160	215	255	150	195	230	210	275	325	180	235	280	130	170	200	130	170	205
K7	145	190	225	130	175	210	185	245	295	160	210	250	115	150	180	115	155	180
N1	—	—	—	850	1150	1350	—	—	—	1050	1400	1675	—	—	—	760	1025	1200
N2	—	—	—	690	920	1100	—	—	—	860	1150	1350	—	—	—	610	820	970
N3	—	—	—	460	610	730	—	—	—	570	760	900	—	—	—	410	550	640
N11	—	—	—	520	700	840	—	—	—	650	870	1025	—	—	—	465	630	740
S1	—	—	—	55	70	85	—	—	—	70	90	105	47	65	75	50	65	80
S2	—	—	—	43	55	65	—	—	—	55	70	85	38	50	60	40	55	65
S3	—	—	—	38	50	60	—	—	—	48	65	75	34	44	50	36	47	55
S11	—	—	—	75	100	120	—	—	—	95	125	150	65	90	105	70	95	110
S12	—	—	—	43	55	70	—	—	—	55	75	85	39	50	60	40	55	65
S13	—	—	—	34	45	55	—	—	—	44	60	70	31	40	48	32	43	50
H5	55	70	85	44	60	70	—	—	—	60	75	90	43	55	65	43	55	65
H8	55	75	90	47	60	75	—	—	—	60	80	95	45	60	70	45	60	70
H11	65	90	105	55	75	90	—	—	—	75	95	115	55	70	85	55	70	85
H12	100	135	160	85	115	135	—	—	—	110	145	175	80	110	130	80	110	130
H21	55	75	90	47	60	75	—	—	—	60	80	95	45	60	70	45	60	70

Octomill 220.43-07S

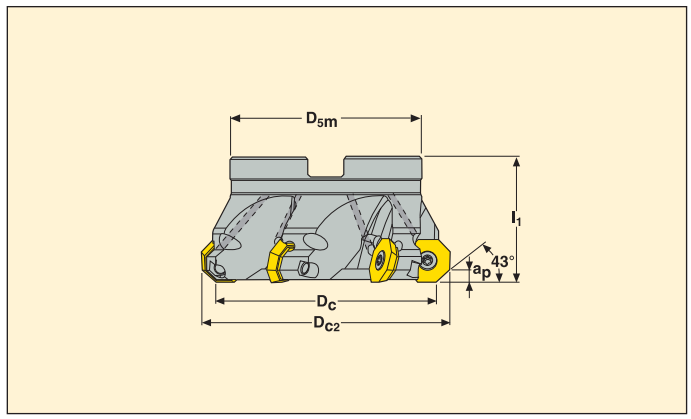

- For insert selection and cutting data recommendations, see page(s) 169 - 170
- For complete insert programme, see page(s) 612

Pitch	Part No.	Type of mounting	Dimensions in mm a_p	D_c	D_{c2}	D_{5m}	dm_m	l_1		KG		Insert
Normal												
	R220.43 -0051-07S	Arbor	5	51	63	47	22	40	4	0,4	7300	OF.T/W070405
	-0063-07SA	Arbor	5	63	75	47	22	40	4	0,5	6800	OF.T/W070405
	-0080-07SA	Arbor	5	80	92	62	27	50	5	1,0	6200	OF.T/W070405
	-0100-07SA	Arbor	5	100	112	77	32	50	6	1,7	5600	OF.T/W070405
	-0125-07S	Arbor	5	125	137	90	40	63	8	3,0	5100	OF.T/W070405

Spare Parts

For cutter	Insert screw	Insert key	Arbor screw
R220.43-0051-0063	C05013-T20P	T20P-4	220.17-692
R220.43-0080	C05013-T20P	T20P-4	–
R220.43-0100	C05013-T20P	T20P-4	–
R220.43-0125	C05013-T20P	T20P-4	–

Please check availability in current price and stock-list
Torque value 0,5 Nm. Torque keys, see page 690

R220.43-07S – Insert selection

SMG		a_p	f_z		
			100%	30%	10%
P1	OFMT070405TN-ME13 MP2500	3,0	0,26	0,30	0,44
P2	OFMT070405TN-ME13 MP2500	3,0	0,28	0,30	0,46
P3	OFMT070405TN-M15 MP2500	3,0	0,30	0,32	0,50
P4	OFMT070405TN-M15 MP2500	3,0	0,30	0,32	0,48
P5	OFMT070405TN-M15 MP2500	3,0	0,28	0,32	0,48
P6	OFMT070405TN-M15 MP2500	3,0	0,28	0,30	0,48
P7	OFMT070405TN-M15 MP2500	3,0	0,28	0,30	0,48
P8	OFMT070405TN-M15 MP2500	3,0	0,30	0,32	0,50
P11	OFMT070405TN-M15 MP2500	3,0	0,28	0,30	0,48
M1	OFMT070405TN-ME13 F40M	3,0	0,28	0,30	0,46
M2	OFMT070405TN-ME13 F40M	3,0	0,24	0,28	0,42
M3	OFMT070405TN-ME13 F40M	2,5	0,20	0,22	0,34
M4	OFMT070405TN-ME13 MM4500	1,8	0,17	0,19	0,30
M5	OFMT070405TN-ME13 MM4500	1,8	0,17	0,19	0,30
K1	OFET070405TN-M16 MK1500	3,0	0,34	0,36	0,55
K2	OFET070405TN-M16 MK1500	3,0	0,30	0,34	0,50
K3	OFET070405TN-M16 MK1500	3,0	0,30	0,34	0,50
K4	OFET070405TN-M16 MK1500	3,0	0,30	0,34	0,50
K5	OFEW070405TN-D18 MP1500	3,0	0,30	0,34	0,50
K6	OFEW070405TN-D18 MP1500	3,0	0,34	0,38	0,60
K7	OFEW070405TN-D18 MP1500	3,0	0,30	0,34	0,50
N1	OFMT070405TN-ME13 F40M	3,0	0,34	0,38	0,60
N2	OFMT070405TN-ME13 F40M	3,0	0,34	0,38	0,60
N3	OFMT070405TN-ME13 F40M	3,0	0,34	0,38	0,60
N11	OFMT070405TN-ME13 F40M	3,0	0,34	0,38	0,60
S1	OFMT070405TN-ME13 F40M	1,8	0,17	0,19	0,30
S2	OFMT070405TN-ME13 F40M	1,8	0,17	0,19	0,30
S3	OFMT070405TR-ME13 T350M	1,8	0,16	0,18	0,26
S11	OFMT070405TN-ME13 F40M	2,0	0,20	0,22	0,34
S12	OFMT070405TN-ME13 F40M	2,0	0,20	0,22	0,34
S13	OFMT070405TN-ME13 F40M	1,8	0,17	0,19	0,30
H5	OFEW070405TN-D18 MP1500	2,5	0,24	0,26	0,40
H8	OFEW070405TN-D18 MP1500	2,0	0,18	0,19	0,30
H11	OFEW070405TN-D18 MP1500	2,5	0,24	0,26	0,40
H12	OFEW070405TN-D18 MP1500	2,5	0,24	0,26	0,40
H21	OFEW070405TN-D18 MP1500	2,0	0,18	0,19	0,30

SMG = Seco material group
f_z = mm/tooth
v_c= m/min
a_e/D_c = %
All cutting data are start values

R220.43-07S – Cutting data v_c = (m/min)

	MP1500			MP2500			T350M			F40M			MM4500		
SMG	100%	30%	10%	100%	30%	10%	100%	30%	10%	100%	30%	10%	100%	30%	10%
P1	280	380	445	260	345	415	265	355	425	250	335	395	190	250	300
P2	270	370	435	250	340	395	255	345	410	245	330	380	180	240	290
P3	235	320	385	220	295	350	225	300	355	210	280	335	155	215	250
P4	210	285	340	190	260	310	195	265	320	190	250	300	140	185	225
P5	200	270	320	185	250	300	190	255	305	180	245	285	135	180	215
P6	225	305	360	210	285	335	215	290	340	200	275	320	150	205	240
P7	215	285	340	200	270	315	205	275	320	190	260	300	145	195	225
P8	200	270	320	185	250	295	190	255	300	175	235	280	130	180	210
P11	210	280	330	195	260	305	200	265	310	185	250	295	140	190	220
M1	—	—	—	180	245	285	195	265	315	195	265	305	155	210	245
M2	—	—	—	150	200	240	165	220	260	160	220	255	130	170	205
M3	—	—	—	125	165	195	135	180	210	130	175	205	105	140	165
M4	—	—	—	95	125	150	105	140	165	100	135	160	80	110	130
M5	—	—	—	80	105	125	85	115	135	85	110	135	70	90	105
K1	215	290	345	195	270	315	200	270	325	195	260	300	—	—	—
K2	190	255	305	180	235	285	185	240	290	170	230	270	—	—	—
K3	165	220	260	150	200	240	155	205	245	145	195	230	—	—	—
K4	155	210	245	145	190	230	145	195	235	135	185	220	—	—	—
K5	95	130	155	85	120	140	90	120	145	85	115	135	—	—	—
K6	135	185	220	125	170	200	130	170	205	120	165	190	—	—	—
K7	120	165	195	110	150	180	115	155	180	110	145	170	—	—	—
N1	—	—	—	720	970	1175	—	—	—	710	940	1125	—	—	—
N2	—	—	—	580	790	950	—	—	—	570	760	910	—	—	—
N3	—	—	—	390	520	630	—	—	—	380	500	610	—	—	—
N11	—	—	—	445	600	720	—	—	—	435	580	690	—	—	—
S1	—	—	—	46	60	75	49	65	75	48	60	75	25	33	39
S2	—	—	—	37	50	60	39	50	60	38	50	60	20	27	32
S3	—	—	—	33	44	50	34	45	55	34	44	55	18	23	28
S11	—	—	—	65	85	105	65	90	105	65	85	105	35	46	55
S12	—	—	—	38	50	60	39	50	60	38	50	60	27	35	42
S13	—	—	—	30	40	48	32	42	49	31	40	49	22	29	34
H5	46	60	75	38	50	60	43	55	70	40	55	65	—	—	—
H8	49	65	80	41	55	65	46	60	70	42	55	65	—	—	—
H11	60	80	95	49	65	80	55	75	85	50	70	80	—	—	—
H12	95	125	150	80	105	125	90	120	140	80	110	130	—	—	—
H21	49	65	80	41	55	65	46	60	70	42	55	65	—	—	—

Double Octomill™ 217.48-05

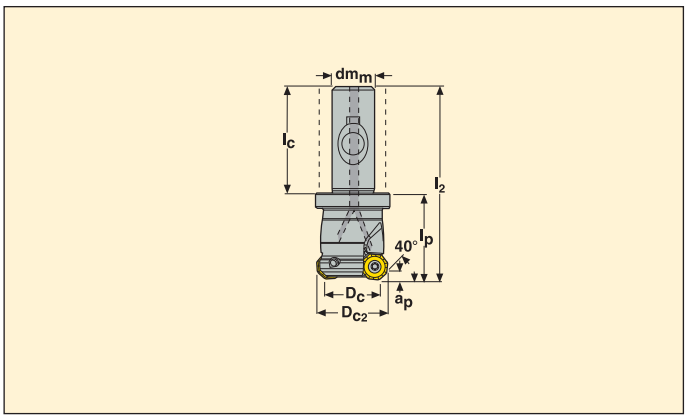

- For insert selection and cutting data recommendations, see page(s) 175 - 176
- For complete insert programme, see page(s) 613

Part No.	Type of mounting	Dimensions in mm							KG		Insert
		a_p	D_{c2}	D_c	dm_m	l_2	l_p				
R217.48 -2025.3S-05-3SA	Seco-Weldon	3,0	33	25	20	90	40	3	0,3	20400	ON.U05
-2532.3S-05-4SA	Seco-Weldon	3,0	40	32	25	90	40	4	0,5	18000	ON.U05

Spare Parts

For cutter	Insert screw	Insert key
R217.48-2525	C04009-T15P	T15P-3
R217.48-2532	C04009-T15P	T15P-2D

Please check availability in current price and stock-list
Torque value 3,5 Nm. Torque keys, see page 690

Double Octomill™ 220.48-05

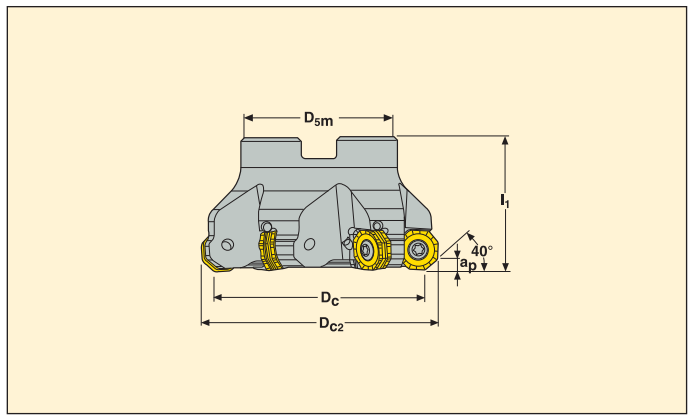

- For insert selection and cutting data recommendations, see page(s) 175 - 176
- For complete insert programme, see page(s) 613

Pitch	Part No.		Type of mounting	Dimensions in mm a_p	D_c	D_{c2}	D_{5m}	dm_m	l_1		KG		Insert
Normal													
	R220.48	-0050-05-04SA	Arbor	3	50	58,35	47	22	40	4	0,4	14400	ON.U05
		-0063-05-05SA	Arbor	3	63	71,35	47	22	40	5	0,6	12800	ON.U05
		-0080-05-06SA	Arbor	3	80	88,35	62	27	50	6	1,2	11400	ON.U05
		-0100-05-07SA	Arbor	3	100	108,35	77	32	50	7	1,8	10200	ON.U05
		-0125-05-08SA	Arbor	3	125	133,35	90	40	63	8	3,4	9100	ON.U05
Normal+													
	R220.48	-0040-05-04SA	Arbor	3	40	48,35	35	16	40	4	0,3	16100	ON.U05
		-0050-05-05SA	Arbor	3	50	58,35	47	22	40	5	0,4	14400	ON.U05
		-0063-05-06SA	Arbor	3	63	71,35	47	22	40	6	0,6	12800	ON.U05

Spare Parts

For cutter	Insert screw	Insert key	Arbor screw
R220.48-0040	C04009-T15P	T15P-3	TCEI0825
R220.48-0050-0063	C04009-T15P	T15P-3	220.17-692
R220.48-0080-0125	C04009-T15P	T15P-3	–

Please check availability in current price and stock-list
Torque value 3,5 Nm. Torque keys, see page 690

Double Octomill™ 220.48-05

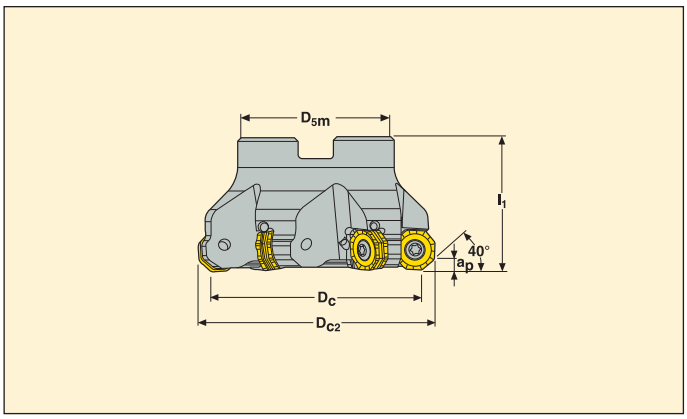

- For insert selection and cutting data recommendations, see page(s) 175 - 176
- For complete insert programme, see page(s) 613

Pitch	Part No.	Type of mounting	Dimensions in mm a_p	D_c	D_{c2}	D_{5m}	dm_m	l_1		KG		Insert
Close												
	R220.48 -0040-05-05SA	Arbor	3	40	48,35	35	16	40	5	0,3	16100	ON.U05
	-0050-05-06SA	Arbor	3	50	58,35	47	22	40	6	0,4	14400	ON.U05
	-0063-05-08SA	Arbor	3	63	71,35	47	22	40	8	0,6	12800	ON.U05
	-0080-05-10SA	Arbor	3	80	88,35	62	27	50	10	1,1	11400	ON.U05
	-0100-05-12SA	Arbor	3	100	108,35	77	32	50	12	1,8	10200	ON.U05
	-0125-05-14SA	Arbor	3	125	133,35	90	40	63	14	3,3	9100	ON.U05

Spare Parts

For cutter	Insert screw	Insert key	Arbor screw
		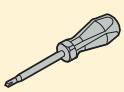	
R220.48-0040	C04009-T15P	T15P-3	TCEI0825
R220.48-0050-0063	C04009-T15P	T15P-3	220.17-692
R220.48-0080-0125	C04009-T15P	T15P-3	–

Please check availability in current price and stock-list
Torque value 3,5 Nm. Torque keys, see page 690

Double Octomill™ 220.48-05

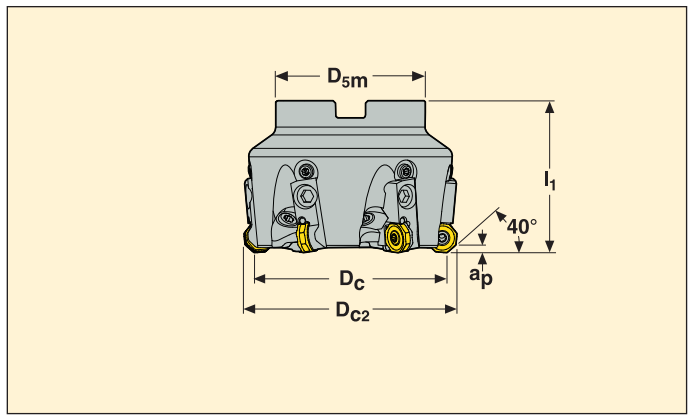

- For insert selection and cutting data recommendations, see page(s) 175-176
- For complete insert programme, see page(s) 613

Part No.	Type of mounting	Dimensions in mm							KG		Insert
		a_p	D_c	D_{c2}	D_{5m}	dm_m	l_1				
R220.48 -0080-05-6CS	Arbor	3	80	88	62	27	63	6	1,7	11400	ON..05
-0100-05-8CS	Arbor	3	100	108	77	32	63	8	3,0	10200	ON..05
-0125-05-10CS	Arbor	3	125	133	90	40	63	10	4,0	9100	ON..05
-8160-05-14CS	Arbor	3	160	168	140	40	63	14	6,5	8000	ON..05
-8200-05-18CS	Arbor	3	200	208	160	60	63	18	9,0	7200	ON..05

Spare Parts

For cutter	Wedge screw	Wedge clamp axial adj.	Wedge clamp	Replacement blade	Key (T-handle)	Insert screw	Insert key	Cassette screw	Cassette
R220.48-..	LD8020-T25P	AU1114T-T15P	CW0810	H6B-T15P	DOUBLE-T	C04009-T15P	T15P-3	FS96018	ON05AR

Please check availability in current price and stock-list
Torque value 3,5 Nm. Torque keys, see page 690

R220.48-05 – Insert selection

SMG		a_p	f_z		
			100%	30%	10%
P1	ONMU050410ANTN-M10 MP2500	1,8	0,22	0,24	0,36
P2	ONMU050410ANTN-M10 MP2500	1,8	0,22	0,24	0,38
P3	ONMU050410ANTN-M10 MP2500	1,8	0,22	0,22	0,36
P4	ONMU050410ANTN-M10 MP2500	1,8	0,20	0,22	0,34
P5	ONMU050410ANTN-M10 MP2500	1,8	0,20	0,22	0,34
P6	ONMU050410ANTN-M10 MP2500	1,8	0,20	0,22	0,34
P7	ONMU050410ANTN-M10 MP2500	1,8	0,20	0,22	0,34
P8	ONMU050410ANTN-M10 MP1500	1,8	0,22	0,22	0,36
P11	ONMU050410ANTN-M10 MP1500	1,8	0,20	0,22	0,34
M1	ONMU050410ANTN-ME10 F40M	1,8	0,22	0,24	0,38
M2	ONMU050410ANTN-ME10 F40M	1,8	0,20	0,22	0,34
M3	ONMU050410ANTN-ME10 F40M	1,4	0,16	0,18	0,28
M4	ONMU050410ANTN-M10 T350M	1,0	0,14	0,15	0,24
M5	ONMU050410ANTN-M10 MM4500	1,0	0,14	0,15	0,24
K1	ONMU050410ANTN-M10 MK2050	1,8	0,22	0,24	0,38
K2	ONMU050410ANTN-M10 MK2050	1,8	0,20	0,22	0,34
K3	ONMU050410ANTN-M10 MK2050	1,8	0,20	0,22	0,34
K4	ONMU050410ANTN-M10 MK2050	1,8	0,20	0,22	0,34
K5	ONMU050410ANTN-M10 MK2050	1,8	0,18	0,20	0,30
K6	ONMU050410ANTN-M10 MK2050	1,8	0,20	0,22	0,34
K7	ONMU050410ANTN-M10 MK2050	1,8	0,18	0,20	0,30
N1	ONMU050410ANTN-ME10 F40M	1,8	0,28	0,30	0,48
N2	ONMU050410ANTN-ME10 F40M	1,8	0,28	0,30	0,48
N3	ONMU050410ANTN-ME10 F40M	1,8	0,28	0,30	0,48
N11	ONMU050410ANTN-ME10 F40M	1,8	0,28	0,30	0,48
S1	ONMU050410ANTN-ME10 F40M	1,0	0,14	0,15	0,24
S2	ONMU050410ANTN-ME10 F40M	1,0	0,14	0,15	0,24
S3	ONMU050410ANTN-ME10 F40M	1,0	0,13	0,14	0,22
S11	ONMU050410ANTN-ME10 MS2050	1,2	0,16	0,18	0,28
S12	ONMU050410ANTN-ME10 MS2050	1,2	0,16	0,18	0,28
S13	ONMU050410ANTN-ME10 MS2050	1,0	0,14	0,15	0,24
H5	ONMU050410ANTN-M10 MP1500	1,4	0,14	0,15	0,22
H8	ONMU050410ANTN-M10 MP1500	1,2	0,11	0,11	0,18
H11	ONMU050410ANTN-M10 MP1500	1,4	0,14	0,15	0,22
H12	ONMU050410ANTN-M10 MP1500	1,4	0,14	0,15	0,22
H21	ONMU050410ANTN-M10 MP1500	1,2	0,11	0,11	0,18

SMG = Seco material group
f_z = mm/tooth
v_c= m/min
a_e/D_c = %
All cutting data are start values

R220.48-05 – Cutting data v_c = (m/min)

	MP1020			MP1500			MP2500			MP3000			T350M			F40M		
SMG	100%	30%	10%	100%	30%	10%	100%	30%	10%	100%	30%	10%	100%	30%	10%	100%	30%	10%
P1	320	390	440	315	425	510	280	375	450	265	355	425	245	325	390	210	285	340
P2	310	380	415	310	415	485	275	365	430	260	345	410	240	320	375	205	280	325
P3	265	345	370	265	365	425	235	325	375	220	305	355	205	280	325	180	245	285
P4	255	305	330	240	320	380	215	285	335	200	270	320	185	250	295	160	215	255
P5	240	290	315	230	305	360	205	270	320	190	255	305	175	235	280	155	205	245
P6	270	325	355	255	345	405	230	305	360	215	290	340	200	265	315	175	230	275
P7	255	305	335	245	325	385	215	290	340	205	270	320	185	250	295	165	220	260
P8	225	290	310	225	305	355	195	270	315	185	255	300	170	235	275	150	205	240
P11	250	300	325	235	315	375	210	280	330	200	265	315	180	245	290	160	210	250
M1	—	—	—	—	—	—	195	265	310	195	260	305	185	245	290	165	225	265
M2	—	—	—	—	—	—	165	220	260	160	215	255	150	205	240	140	185	220
M3	—	—	—	—	—	—	130	175	205	130	170	205	125	165	195	110	150	175
M4	—	—	—	—	—	—	105	135	160	100	135	160	95	130	150	85	115	135
M5	—	—	—	—	—	—	85	115	135	85	110	130	80	105	125	75	95	115
K1	—	—	—	245	330	385	215	290	340	205	275	325	190	255	295	165	220	260
K2	—	—	—	215	290	345	195	260	305	180	245	290	170	225	265	145	195	230
K3	—	—	—	185	245	290	165	220	260	155	205	245	140	190	225	125	165	195
K4	—	—	—	175	235	280	155	210	245	145	195	235	135	180	215	120	160	185
K5	—	—	—	110	145	170	95	125	150	90	120	145	85	110	130	70	95	115
K6	—	—	—	155	205	245	135	185	215	130	175	205	120	160	190	105	140	165
K7	—	—	—	140	185	220	120	165	195	115	155	185	105	140	170	90	125	145
N1	—	—	—	—	—	—	800	1075	1250	750	1025	1200	—	—	—	600	820	960
N2	—	—	—	—	—	—	640	870	1025	610	820	970	—	—	—	485	660	770
N3	—	—	—	—	—	—	430	580	680	405	550	640	—	—	—	325	440	510
N11	—	—	—	—	—	—	490	660	780	465	630	740	—	—	—	370	500	590
S1	—	—	—	—	—	—	50	65	80	47	65	75	45	60	70	41	55	65
S2	—	—	—	—	—	—	40	55	65	38	50	60	36	48	55	33	44	50
S3	—	—	—	—	—	—	35	47	55	33	44	50	32	42	50	29	38	45
S11	—	—	—	—	—	—	70	90	110	65	85	105	60	80	95	55	75	90
S12	—	—	—	—	—	—	40	55	65	38	50	60	36	47	55	33	43	50
S13	—	—	—	—	—	—	32	43	50	30	41	48	29	38	45	26	35	41
H5	—	—	—	50	65	80	41	55	65	40	55	65	39	50	60	34	45	55
H8	—	—	—	55	70	85	43	60	70	42	55	65	41	55	65	36	48	55
H11	—	—	—	65	85	105	50	70	85	50	70	80	50	65	80	43	60	70
H12	—	—	—	105	140	165	85	110	135	80	110	130	80	110	130	70	95	110
H21	—	—	—	55	70	85	43	60	70	42	55	65	41	55	65	36	48	55

R220.48-05 – Cutting data v_c = (m/min)

	MK1500			MK2050			MM4500			MS2050		
SMG	100%	30%	10%	100%	30%	10%	100%	30%	10%	100%	30%	10%
P1	—	—	—	275	370	440	170	230	275	255	315	350
P2	—	—	—	270	360	425	170	225	265	250	305	340
P3	—	—	—	230	320	370	145	200	230	215	265	295
P4	—	—	—	210	280	330	130	175	205	190	230	255
P5	—	—	—	200	265	315	125	165	195	180	220	245
P6	—	—	—	225	300	355	140	185	220	205	250	275
P7	—	—	—	210	285	335	130	175	210	195	235	260
P8	—	—	—	195	265	310	120	165	195	180	220	245
P11	—	—	—	205	275	325	130	170	205	190	230	250
M1	—	—	—	—	—	—	145	195	225	215	270	300
M2	—	—	—	—	—	—	120	160	190	180	215	240
M3	—	—	—	—	—	—	95	130	150	135	160	175
M4	—	—	—	—	—	—	75	100	120	100	115	125
M5	—	—	—	—	—	—	65	85	100	85	95	105
K1	305	410	485	290	390	455	—	—	—	250	310	345
K2	275	365	430	260	345	410	—	—	—	220	270	295
K3	230	310	365	220	290	345	—	—	—	185	225	250
K4	220	295	350	210	280	330	—	—	—	180	215	240
K5	135	180	215	130	170	205	—	—	—	105	130	140
K6	195	260	305	185	245	290	—	—	—	155	190	210
K7	175	230	275	165	220	260	—	—	—	135	165	180
N1	—	—	—	—	—	—	—	—	—	—	—	—
N2	—	—	—	—	—	—	—	—	—	—	—	—
N3	—	—	—	—	—	—	—	—	—	—	—	—
N11	—	—	—	—	—	—	—	—	—	—	—	—
S1	—	—	—	—	—	—	23	31	36	41	55	60
S2	—	—	—	—	—	—	18	25	29	33	44	50
S3	—	—	—	—	—	—	16	22	26	30	39	45
S11	—	—	—	—	—	—	32	42	50	55	70	85
S12	—	—	—	—	—	—	25	33	39	42	55	65
S13	—	—	—	—	—	—	20	26	31	36	47	55
H5	—	—	—	—	—	—	—	—	—	—	—	—
H8	—	—	—	—	—	—	—	—	—	—	—	—
H11	—	—	—	—	—	—	—	—	—	—	—	—
H12	—	—	—	—	—	—	—	—	—	—	—	—
H21	—	—	—	—	—	—	—	—	—	—	—	—

Double Octomill™ 220.48-09

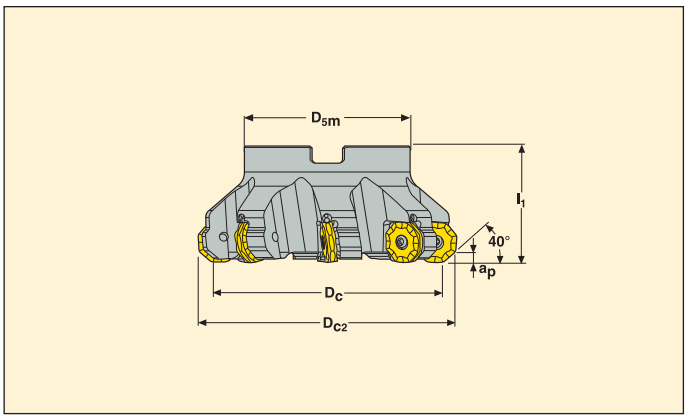

- For insert selection and cutting data recommendations, see page(s) 181 - 182
- For complete insert programme, see page(s) 613

Pitch	Part No.		Type of mounting	Dimensions in mm a_p	D_c	D_{c2}	D_{5m}	dm_m	l_1		KG		Insert
Normal													
	R220.48	-0063-09-05SA	Arbor	6	63	78	47	22	40	5	0,5	4900	ON.U09
		-0080-09-06SA	Arbor	6	80	95	62	27	50	6	1,0	4400	ON.U09
		-0100-09-07SA	Arbor	6	100	115	77	32	50	7	1,6	3900	ON.U09
		-0125-09-08SA	Arbor	6	125	140	90	40	63	8	2,9	3500	ON.U09
		-8160-09-10S	Arbor	6	160	175	90	40	63	10	4,2	3100	ON.U09
		-8200-09-12S	Arbor	6	200	215	130	60	63	12	5,4	2700	ON.U09
		-8250-09-16S	Arbor	6	250	265	130	60	63	16	13,0	2500	ON.U09
		-8315-09-20S	Arbor	6	315	330	225	60	80	20	27,1	2200	ON.U09
Normal+													
	R220.48	-0063-09-06SA	Arbor	6	63	78	47	22	40	6	0,5	4900	ON.U09
		-0080-09-07SA	Arbor	6	80	95	62	27	50	7	1,0	4400	ON.U09
		-0100-09-08SA	Arbor	6	100	115	77	32	50	8	1,6	3900	ON.U09
		-0125-09-10SA	Arbor	6	125	140	90	40	63	10	3,0	3500	ON.U09
		-8160-09-12S	Arbor	6	160	175	90	40	63	12	4,4	3100	ON.U09

Spare Parts

For cutter	Insert screw	Insert key	Arbor screw
		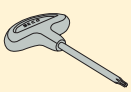	
R220.48-0063	C05013-T20P	T20P-4	220.17-692
R220.48-0080-0125	C05013-T20P	T20P-4	–
R220.48-8160	C05013-T20P	T20P-4	–
R220.48-8200	C05013-T20P	T20P-4	–
R220.48-8250-8315	C05013-T20P	T20P-4	–

Please check availability in current price and stock-list
Torque value 6,0 Nm. Torque keys, see page 690

Double Octomill™ 217.48-09

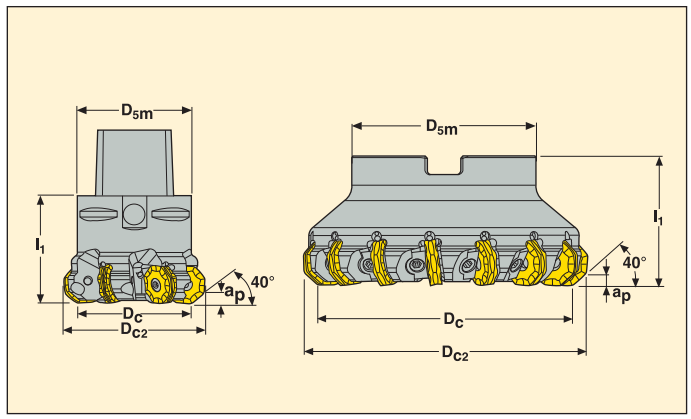

- For insert selection and cutting data recommendations, see page(s) 181 - 182
- For complete insert programme, see page(s) 613

Pitch	Part No.	Type of mounting	Dimensions in mm a_p	D_c	D_{c2}	D_{5m}	dm_m	l_1		KG		Insert
Close												
	C6-R217.48 -080-09-09M	Seco-Capto	6	80	95	63	–	63	9	2,3	4400	ON.U09
	C8-R217.48 -100-09-12M	Seco-Capto	6	100	115	80	–	80	12	4,5	3900	ON.U09
	R220.48 -0080-09-09M	Arbor	6	80	95	62	27	50	9	1,2	4400	ON.U09
	-0100-09-12M	Arbor	6	100	115	77	32	50	12	1,9	3900	ON.U09
	-0125-09-15M	Arbor	6	125	140	90	40	63	15	3,4	3500	ON.U09
	-8160-09-20M	Arbor	6	160	175	90	40	63	20	4,8	3100	ON.U09
	-8200-09-24M	Arbor	6	200	215	130	60	63	24	6,0	2700	ON.U09
	-8200-09-28M	Arbor	6	200	215	130	60	63	28	5,9	2700	ON.U09
	-8250-09-30M	Arbor	6	250	265	130	60	63	30	14,1	2500	ON.U09
	-8315-09-40M	Arbor	6	315	330	225	60	80	40	28,6	2200	ON.U09

Spare Parts

For cutter	Wedge kit	Key	Insert key
C6-C8-217.48..M	CW0816-RHA	–	T20P-4
R220.48-09M_	CW0816-RHA	T20P-4	–
R220.48-09M	CW0816-RHA	T20P-4	–

Please check availability in current price and stock-list
Torque value 6,0 Nm. Torque keys, see page 690

Double Octomill™ 220.48-09 CAP

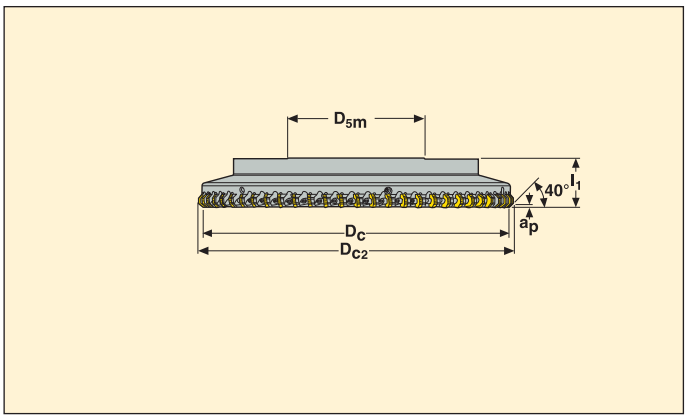

- For insert selection and cutting data recommendations, see page(s) 181 - 182
- For complete insert programme, see page(s) 613

Pitch	Part No.	Support body Part no.	Dimensions in mm a_p	D_c	D_{c2}	D_{5m}	dm_m	l_1		KG		Insert
Close												
	R220.48 -9250-09-30M	260-425M-1	6	250	265	220		63	30	9,2	2500	ON.U09..
	-9315-09-40M	260-431M-1	6	315	330	285		63	40	13,2	2200	ON.U09..
	-9315-09-50M	260-431M-1	6	315	330	285		63	50	17,7	2200	ON.U09..
	-9355-09-50M	260-435M-1	6	355	370	285		63	50	15,1	2000	ON.U09..
	-9400-09-50M	260-440M-1	6	400	415	370		63	50	18,6	1900	ON.U09..
	-9500-09-60M	260-450M-1	6	500	515	470		63	60	33,7	1700	ON.U09..

Spare Parts

For cutter	Wedge kit	Key
		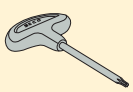
R220.48-...	CW0816-RHA	T20P-4

Please check availability in current price and stock-list
Torque value 6,0 Nm. Torque keys, see page 690

Double Octomill™ 220.48-09CS

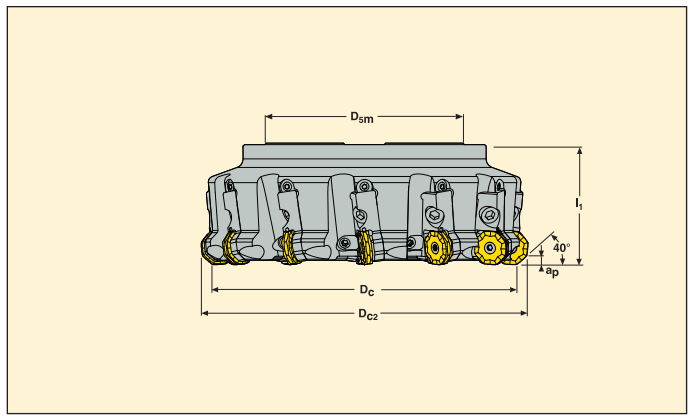

- For insert selection and cutting data recommendations, see page(s) 181 - 182
- For complete insert programme, see page(s) 613

Pitch	Part No.		Type of mounting	Dimensions in mm a_p	D_c	D_{c2}	D_{5m}	dm_m	l_1		KG		Insert
Normal													
	R220.48	-0125-09-08CS	Arbor	6	125	140	90	40	80,0	8	4,9	3500	ON.U09
		-8160-09-10CS	Arbor	6,0	160,0	175,0	130,0	40,0	80,0	10	7,6	3100	ON.U09
		-8200-09-12CS	Arbor	6,0	200,0	215,0	160,0	60,0	80,0	12	10,5	2700	ON.U09
		-8250-09-16CS	Arbor	6,0	250,0	265,0	200,0	60,0	80,0	16	19,6	2500	ON.U09
		-8315-09-20CS	Arbor	6,0	315,0	330,0	270,0	60,0	80,0	20	35,5	2200	ON.U09
	L220.48	-0125-09-08CS	Arbor	6,0	125,0	140,0	90,0	40,0	80,0	8	4,9	3500	ON.U09
		-8160-09-10CS	Arbor	6,0	160,0	175,0	130,0	40,0	80,0	10	7,6	3100	ON.U09
		-8200-09-12CS	Arbor	6,0	200,0	215,0	160,0	60,0	80,0	12	10,5	2700	ON.U09
		-8250-09-16CS	Arbor	6,0	250,0	265,0	200,0	60,0	80,0	16	19,6	2500	ON.U09

Spare Parts

For cutter	Wedge screw	Wedge clamp	Setting gauge	Insert screw	Insert key	Cassette screw	Cassette (R)	Cassette (L)
L220.48	LD8020-T25P	CW0810	AU1114T-T15P	C05013-T20P	T20P-4	FS98030	–	ON09AL
R220.48	LD8020-T25P	CW0810	AU1114T-T15P	C05013-T20P	T20P-4	FS98030	ON09AR	–

Please check availability in current price and stock-list
Torque value 6,0 Nm. Torque keys, see page 690

R220.48-09 – Insert selection

SMG		a_p	f_z		
			100%	30%	10%
P1	ONMU090520ANTN-M12 MP2500	3,5	0,26	0,28	0,44
P2	ONMU090520ANTN-M12 MP2500	3,5	0,26	0,30	0,44
P3	ONMU090520ANTN-M12 MP2500	3,5	0,26	0,28	0,42
P4	ONMU090520ANTN-M12 MP2500	3,5	0,24	0,28	0,42
P5	ONMU090520ANTN-M12 MP2500	3,5	0,24	0,26	0,40
P6	ONMU090520ANTN-M12 MP2500	3,5	0,24	0,26	0,40
P7	ONMU090520ANTN-M12 T350M	3,5	0,24	0,26	0,40
P8	ONMU090520ANTN-M12 T350M	3,5	0,26	0,28	0,42
P11	ONMU090520ANTN-M12 T350M	3,5	0,24	0,26	0,40
M1	ONMU090520ANTN-ME12 F40M	3,5	0,26	0,30	0,44
M2	ONMU090520ANTN-ME12 F40M	3,5	0,24	0,26	0,40
M3	ONMU090520ANTN-ME12 F40M	3,0	0,19	0,22	0,32
M4	ONMU090520ANTN-ME12 T350M	2,0	0,17	0,19	0,28
M5	ONMU090520ANTN-ME12 MM4500	2,0	0,17	0,19	0,28
K1	ONMU090520ANTN-M14 MK2050	3,5	0,32	0,34	0,50
K2	ONMU090520ANTN-M14 MK2050	3,5	0,28	0,30	0,48
K3	ONMU090520ANTN-M14 MK2050	3,5	0,28	0,30	0,48
K4	ONMU090520ANTN-M14 MK2050	3,5	0,28	0,30	0,48
K5	ONMU090520ANTN-M14 MK2050	3,5	0,26	0,28	0,42
K6	ONMU090520ANTN-M14 MK2050	3,5	0,28	0,30	0,48
K7	ONMU090520ANTN-M14 MK2050	3,5	0,26	0,28	0,42
N1	ONMU090520ANTN-ME12 F40M	3,5	0,34	0,38	0,55
N2	ONMU090520ANTN-ME12 F40M	3,5	0,34	0,38	0,55
N3	ONMU090520ANTN-ME12 F40M	3,5	0,34	0,38	0,55
N11	ONMU090520ANTN-ME12 F40M	3,5	0,34	0,38	0,55
S1	ONMU090520ANTN-ME12 MS2500	2,0	0,17	0,19	0,28
S2	ONMU090520ANTN-ME12 MS2500	2,0	0,17	0,19	0,28
S3	ONMU090520ANTN-ME12 MS2500	2,0	0,16	0,17	0,26
S11	ONMU090520ANTN-ME12 MS2050	2,5	0,19	0,22	0,32
S12	ONMU090520ANTN-ME12 MS2050	2,5	0,19	0,22	0,32
S13	ONMU090520ANTN-ME12 MS2050	2,0	0,17	0,19	0,28
H5	ONMU090520ANTN-MD16 MP1500	3,0	0,22	0,24	0,36
H8	ONMU090520ANTN-MD16 MP1500	2,5	0,17	0,18	0,28
H11	ONMU090520ANTN-MD16 MP1500	3,0	0,22	0,24	0,36
H12	ONMU090520ANTN-MD16 MP1500	3,0	0,22	0,24	0,36
H21	ONMU090520ANTN-MD16 MP1500	2,5	0,17	0,18	0,28

SMG = Seco material group
f_z = mm/tooth
v_c= m/min
a_e/D_c = %
All cutting data are start values

R220.48-09 – Cutting data v_c = (m/min)

	MP1020			MP1500			MP2500			MP3000			F40M			MK1500		
SMG	100%	30%	10%	100%	30%	10%	100%	30%	10%	100%	30%	10%	100%	30%	10%	100%	30%	10%
P1	225	290	350	280	375	450	245	335	400	235	315	380	185	250	295	—	—	—
P2	200	280	340	265	365	440	235	325	390	225	305	370	175	240	285	—	—	—
P3	185	255	290	235	320	380	205	285	335	195	270	320	155	210	245	—	—	—
P4	180	225	265	210	285	340	185	250	300	175	235	285	140	185	225	—	—	—
P5	170	230	255	200	275	325	180	245	285	170	230	270	130	180	215	—	—	—
P6	190	255	285	225	310	360	200	275	320	190	260	305	150	205	240	—	—	—
P7	180	245	270	215	290	340	190	260	305	180	245	285	140	190	225	—	—	—
P8	155	215	245	195	270	320	175	240	280	165	225	265	130	180	210	—	—	—
P11	175	235	260	205	285	330	185	250	295	175	240	280	135	185	220	—	—	—
M1	—	—	—	—	—	—	170	235	280	165	230	275	140	195	230	—	—	—
M2	—	—	—	—	—	—	145	195	230	140	195	225	120	160	195	—	—	—
M3	—	—	—	—	—	—	120	160	185	115	155	185	95	130	155	—	—	—
M4	—	—	—	—	—	—	90	120	145	90	120	145	75	100	120	—	—	—
M5	—	—	—	—	—	—	75	100	120	75	100	120	60	85	100	—	—	—
K1	—	—	—	210	290	350	185	255	310	175	245	295	140	190	230	265	365	440
K2	—	—	—	190	260	305	170	230	270	160	220	255	125	170	205	240	330	385
K3	—	—	—	160	220	260	145	195	230	135	185	215	105	145	170	205	275	325
K4	—	—	—	155	210	245	135	185	220	130	175	210	100	135	165	195	265	310
K5	—	—	—	95	130	155	85	115	135	80	110	130	60	85	100	120	160	190
K6	—	—	—	135	185	220	120	165	195	115	155	185	90	120	145	170	235	275
K7	—	—	—	120	165	195	105	145	175	100	140	165	80	110	130	150	205	245
N1	—	—	—	—	—	—	690	940	1125	650	890	1075	510	700	830	—	—	—
N2	—	—	—	—	—	—	560	760	910	530	720	860	415	560	670	—	—	—
N3	—	—	—	—	—	—	370	500	610	350	475	580	275	375	450	—	—	—
N11	—	—	—	—	—	—	425	580	690	400	550	660	315	430	510	—	—	—
S1	—	—	—	—	—	—	44	60	70	42	55	65	35	47	55	—	—	—
S2	—	—	—	—	—	—	36	47	55	34	45	55	28	38	45	—	—	—
S3	—	—	—	—	—	—	32	42	50	30	39	48	25	33	40	—	—	—
S11	—	—	—	—	—	—	60	85	100	60	80	95	49	65	80	—	—	—
S12	—	—	—	—	—	—	36	48	55	34	45	55	28	38	46	—	—	—
S13	—	—	—	—	—	—	29	38	46	27	36	43	23	30	36	—	—	—
H5	—	—	—	45	60	70	36	48	60	35	47	55	30	40	48	—	—	—
H8	—	—	—	48	65	80	39	50	65	38	50	60	32	43	50	—	—	—
H11	—	—	—	60	75	95	47	60	75	46	60	75	38	50	60	—	—	—
H12	—	—	—	95	125	150	75	100	120	75	95	120	60	85	100	—	—	—
H21	—	—	—	48	65	80	39	50	65	38	50	60	32	43	50	—	—	—

R220.48-09 – Cutting data v_c = (m/min)

	MK2050			MM4500			MS2050			MS2500		
SMG	100%	30%	10%	100%	30%	10%	100%	30%	10%	100%	30%	10%
P1	245	330	395	165	225	265	245	315	355	285	385	460
P2	235	320	385	160	215	260	240	300	345	280	375	445
P3	205	280	330	140	190	225	205	260	295	240	330	390
P4	185	245	295	125	165	200	185	230	260	215	290	350
P5	175	240	280	120	160	190	175	225	250	205	280	330
P6	195	270	315	135	180	215	200	250	280	230	315	375
P7	185	255	300	125	170	205	185	235	265	220	300	350
P8	170	235	280	115	160	190	170	220	250	200	275	330
P11	180	245	290	125	165	200	180	230	260	210	290	340
M1	—	—	—	140	185	220	210	265	300	200	270	320
M2	—	—	—	115	155	185	175	220	245	165	225	265
M3	—	—	—	95	125	150	140	165	185	130	180	215
M4	—	—	—	70	95	115	105	120	135	105	140	170
M5	—	—	—	60	80	95	85	100	110	90	115	140
K1	250	345	415	—	—	—	240	305	345	220	295	355
K2	225	310	365	—	—	—	215	270	305	195	265	315
K3	190	265	310	—	—	—	180	230	255	165	225	265
K4	185	250	295	—	—	—	175	220	245	160	215	255
K5	110	150	180	—	—	—	105	130	145	95	130	155
K6	160	220	260	—	—	—	150	190	215	140	190	225
K7	145	195	235	—	—	—	135	165	185	125	170	200
S1	—	—	—	22	29	35	37	48	60	50	70	80
S2	—	—	—	18	23	28	29	39	47	41	55	65
S3	—	—	—	16	21	25	26	36	43	36	48	60
S11	—	—	—	31	41	49	49	65	80	70	95	115
S12	—	—	—	24	31	38	37	49	60	40	55	65
S13	—	—	—	19	25	30	31	41	50	33	44	55
H5	—	—	—	—	—	—	—	—	—	42	55	65
H8	—	—	—	—	—	—	—	—	—	44	60	70
H11	—	—	—	—	—	—	—	—	—	55	70	85
H12	—	—	—	—	—	—	—	—	—	85	115	140
H21	—	—	—	—	—	—	—	—	—	44	60	70

Hexamill 220.66-12

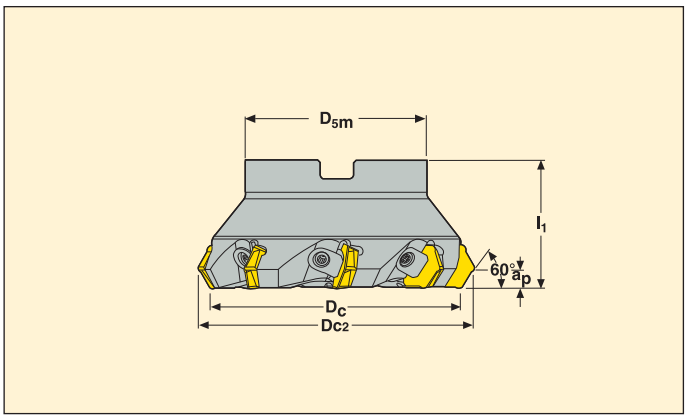

- For insert selection and cutting data recommendations, see page(s) 185 - 186
- For complete insert programme, see page(s) 603

Pitch	Part No.	Type of mounting	Dimensions in mm a_p	D_c	D_{c2}	D_{5m}	dm_m	l_1		KG		Insert
Normal												
	R220.66 -0063-12-4	Arbor	8	63	75,7	47	22	50	4	0,8	3700	HP..1206
	-0080-12-5	Arbor	8	80	92,7	62	27	50	5	1,3	3300	HP..1206
	-0100-12-6	Arbor	8	100	112,7	77	32	50	6	1,7	2900	HP..1206
	-0125-12-8	Arbor	8	125	137,7	90	40	63	8	3,2	2600	HP..1206
	-8160-12-10	Arbor	8	160	172,7	128	40	63	10	4,8	2300	HP..1206
Coarse												
	R220.66 -0063-12-3	Arbor	8	63	75,7	47	22	50	3	0,8	3700	HP..1206
	-0100-12-5	Arbor	8	100	112,7	77	32	50	5	1,8	2900	HP..1206
	-0125-12-6	Arbor	8	125	137,7	90	40	63	6	3,2	2600	HP..1206
	-8160-12-7	Arbor	8	160	172,7	90	40	63	7	5,0	2300	HP..1206

Spare Parts

For cutter	Wedge screw	Wedge key	Insert wedge	Arbor screw
		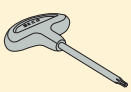		
R220.66-0063	LD8020-T25P	T25P-4	CW0813	220.17-691
R220.66-0080	LD8020-T25P	T25P-4	CW0813	MC6S12X35
R220.66-0100-8160	LD8020-T25P	T25P-4	CW0813	–

Please check availability in current price and stock-list
Torque value 6,0 Nm. Torque keys, see page 690

Hexamill 220.66-12CM

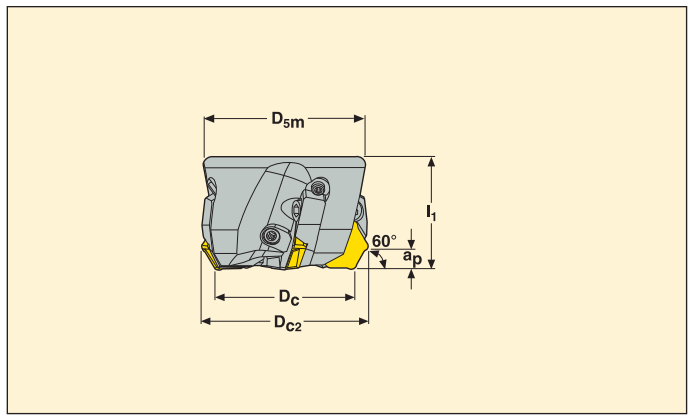

- For insert selection and cutting data recommendations, see page(s) 185 - 186
- For complete insert programme, see page(s) 603

Pitch	Part No.	Type of mounting	Dimensions in mm a_p	D_c	D_{c2}	D_{5m}	dm_m	l_1		KG		Insert
Normal												
	R220.66 -0063-12-4CM	Arbor	8	63	75,7	47	22	50	4	1,1	3700	HP..1206ZETR
	-0080-12-5CM	Arbor	8	80	92,7	62	27	50	5	1,7	3300	HP..1206ZETR
	-0100-12-6CM	Arbor	8	100	112,7	77	32	50	6	2,4	2900	HP..1206ZETR
	-0125-12-8CM	Arbor	8	125	137,7	90	40	63	8	4,0	2600	HP..1206ZETR
	-8160-12-10CM	Arbor	8	160	172,7	128	40	63	10	6,3	2300	HP..1206ZETR
	-8200-12-12CM	Arbor	8	200	212,7	168	60	63	12	9,1	2000	HP..1206ZETR
	-8250-12-16CM	Arbor	8	250	262,7	218	60	63	16	15,0	1800	HP..1206ZETR

Spare Parts

For cutter	Wedge screw	Wedge key	Setting gauge	Insert wedge	Cassette screw	Cassette	Arbor screw
R220.66-0063	LD8020-T25P	T25P-4	AU1114T-T15P	CW0813	FS96018	HP12DRM	220.17-692
R220.66-0080	LD8020-T25P	T25P-4	AU1114T-T15P	CW0813	FS96018	HP12DRM	MC6S12X35
R220.66-0100-8250	LD8020-T25P	T25P-4	AU1114T-T15P	CW0813	FS96018	HP12DRM	–

Please check availability in current price and stock-list
Torque value 6,0 Nm. Torque keys, see page 690

R220.66-12 – Insert selection

SMG		a_p	f_z		
			100%	30%	10%
P1	HPMR1206ZETR-ME15 MP2500	5,0	0,24	0,26	0,40
P2	HPMR1206ZETR-ME15 MP2500	5,0	0,24	0,28	0,42
P3	HPMR1206ZETR-ME15 MP2500	5,0	0,24	0,26	0,40
P4	HPMR1206ZETR-ME15 MP2500	5,0	0,22	0,26	0,38
P5	HPMR1206ZETR-ME15 MP2500	5,0	0,22	0,24	0,38
P6	HPMR1206ZETR-M17 MP2500	5,0	0,24	0,26	0,40
P7	HPMR1206ZETR-M17 MP2500	5,0	0,24	0,26	0,40
P8	HPMN1206ZETR-MD20 MP2500	5,0	0,30	0,32	0,50
P11	HPMN1206ZETR-MD20 MP2500	5,0	0,28	0,30	0,48
M1	HPMR1206ZETR-ME15 MP2500	5,0	0,24	0,28	0,42
M2	HPMR1206ZETR-ME15 MP2500	5,0	0,22	0,24	0,38
M3	HPMR1206ZETR-ME15 MP2500	4,0	0,18	0,20	0,30
M4	HPMR1206ZETR-ME15 MP2500	3,0	0,16	0,17	0,26
M5	HPMR1206ZETR-ME15 MP2500	3,0	0,16	0,17	0,26
K1	HPMN1206ZETR-MD20 MK2050	5,0	0,32	0,34	0,55
K2	HPMN1206ZETR-MD20 MK2050	5,0	0,28	0,32	0,48
K3	HPMN1206ZETR-MD20 MK2050	5,0	0,28	0,32	0,48
K4	HPMN1206ZETR-MD20 MK2050	5,0	0,28	0,32	0,48
K5	HPMN1206ZETR-MD20 MK2050	5,0	0,26	0,28	0,42
K6	HPMN1206ZETR-MD20 MK2050	5,0	0,28	0,32	0,48
K7	HPMN1206ZETR-MD20 MK2050	5,0	0,26	0,28	0,42
S1	HPMR1206ZETR-ME15 F40M	3,0	0,16	0,17	0,26
S2	HPMR1206ZETR-ME15 F40M	3,0	0,16	0,17	0,26
S3	HPMR1206ZETR-ME15 F40M	3,0	0,15	0,16	0,24
S11	HPMR1206ZETR-ME15 F40M	3,5	0,18	0,20	0,30
S12	HPMR1206ZETR-ME15 F40M	3,5	0,18	0,20	0,30
S13	HPMR1206ZETR-ME15 F40M	3,0	0,16	0,17	0,26
H5	HPMN1206ZETR-D25 MP1500	4,0	0,24	0,26	0,42
H8	HPMN1206ZETR-D25 MP1500	3,5	0,19	0,20	0,32
H11	HPMN1206ZETR-D25 MP1500	4,0	0,24	0,26	0,42
H12	HPMN1206ZETR-D25 MP1500	4,0	0,24	0,26	0,42
H21	HPMN1206ZETR-D25 MP1500	3,5	0,19	0,20	0,32

SMG = Seco material group
f_z = mm/tooth
v_c= m/min
a_e/D_c = %
All cutting data are start values

R220.66-12 – Cutting data v_c = (m/min)

	MP1500			MP2500			T350M			F40M			MK1500			MK2050		
SMG	100%	30%	10%	100%	30%	10%	100%	30%	10%	100%	30%	10%	100%	30%	10%	100%	30%	10%
P1	220	300	355	195	265	315	185	250	300	210	285	335	—	—	—	210	280	340
P2	210	285	345	185	255	305	175	240	285	205	270	325	—	—	—	200	275	320
P3	185	255	295	165	225	265	155	210	250	175	235	280	—	—	—	175	240	285
P4	165	225	270	145	200	240	135	185	225	160	210	250	—	—	—	155	210	255
P5	160	215	255	140	190	230	135	180	215	150	205	240	—	—	—	150	200	240
P6	180	245	290	160	215	255	150	205	240	170	230	270	—	—	—	170	230	270
P7	170	230	270	150	205	240	140	195	225	160	215	255	—	—	—	160	220	255
P8	155	215	250	140	190	220	130	180	210	145	200	235	—	—	—	150	200	240
P11	165	225	265	145	200	235	140	185	220	155	210	250	—	—	—	155	210	250
M1	—	—	—	135	185	220	135	185	220	165	215	260	—	—	—	—	—	—
M2	—	—	—	115	155	185	115	155	185	135	185	215	—	—	—	—	—	—
M3	—	—	—	95	125	150	95	130	150	110	150	175	—	—	—	—	—	—
M4	—	—	—	70	100	120	75	100	115	85	115	140	—	—	—	—	—	—
M5	—	—	—	60	80	100	60	80	100	70	95	115	—	—	—	—	—	—
K1	170	225	275	150	200	245	140	190	225	160	215	255	230	310	365	215	295	345
K2	150	205	245	135	180	215	125	170	205	145	195	230	205	275	330	195	260	310
K3	130	170	205	115	150	185	110	145	170	120	165	195	175	235	280	165	220	265
K4	120	165	195	110	145	175	105	135	165	115	155	185	165	220	265	160	210	250
K5	75	100	120	65	90	105	65	85	100	70	95	115	100	140	165	95	130	155
K6	105	145	175	95	130	155	90	120	145	100	140	160	145	195	235	140	185	220
K7	95	130	155	85	115	135	80	110	130	90	125	145	130	175	210	125	165	200
N1	—	—	—	540	730	870	—	—	—	580	790	930	—	—	—	—	—	—
N2	—	—	—	435	590	700	—	—	—	470	640	750	—	—	—	—	—	—
N3	—	—	—	290	395	470	—	—	—	310	425	500	—	—	—	—	—	—
N11	—	—	—	330	450	540	—	—	—	355	485	570	—	—	—	—	—	—
S1	—	—	—	35	47	55	34	46	55	40	55	65	—	—	—	—	—	—
S2	—	—	—	28	38	46	28	37	44	32	43	50	—	—	—	—	—	—
S3	—	—	—	25	34	40	24	33	39	28	38	46	—	—	—	—	—	—
S11	—	—	—	50	65	80	48	65	75	55	75	90	—	—	—	—	—	—
S12	—	—	—	29	38	46	28	37	44	32	43	50	—	—	—	—	—	—
S13	—	—	—	23	31	37	22	30	35	26	35	42	—	—	—	—	—	—
H5	37	49	60	29	40	47	30	40	48	34	45	55	—	—	—	—	—	—
H8	39	55	65	32	43	50	33	44	50	36	48	60	—	—	—	—	—	—
H11	47	65	75	38	50	60	39	50	60	44	60	70	—	—	—	—	—	—
H12	75	100	120	60	80	95	65	85	100	70	95	110	—	—	—	—	—	—
H21	39	55	65	32	43	50	33	44	50	36	48	60	—	—	—	—	—	—

220.44-15

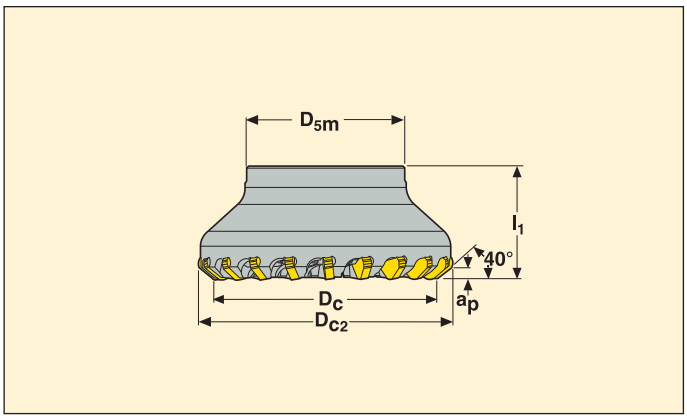

- For insert selection and cutting data recommendations, see page(s) 191 - 191
- For complete insert programme, see page(s) 625

Pitch	Part No.	Type of mounting	Dimensions in mm a_p	D_c	D_{c2}	D_{5m}	dm_m	l_1		KG		Insert
Close												
	R220.44 -8160-15-20	Arbor	7	160	177	90	40	63	20	5,6	2300	SNH.15..
	-8200-15-25	Arbor	7	200	217	130	60	63	25	7,6	2000	SNH.15..
	-8250-15-32	Arbor	7	250	267	130	60	63	32	13,9	1800	SNH.15..
	-8315-15-40	Arbor	7	315	332	225	60	80	40	30,7	1600	SNH.15..
Super close												
	R220.44 -0080-15-12	Arbor	7	80	97	62	27	50	12	1,3	3200	SNH.15..
	-0100-15-16	Arbor	7	100	117	77	32	50	16	1,9	2900	SNH.15..
	-0125-15-20	Arbor	7	125	142	90	40	63	20	3,4	2600	SNH.15..
	-8160-15-25	Arbor	7	160	177	90	40	63	25	5,5	2300	SNH.15..
	-8200-15-32	Arbor	7	200	217	130	60	63	32	7,5	2000	SNH.15..
	-8250-15-40	Arbor	7	250	267	130	60	63	40	13,8	1800	SNH.15..
	-8315-15-50	Arbor	7	315	332	225	60	80	50	29,5	1600	SNH.15..

Spare Parts

For cutter	Wedge screw	Wedge key	Insert wedge
R220.44-..	LD6018T-T15P	T15P-4	CW0608S

Please check availability in current price and stock-list
Torque value 5,0 Nm, Torque keys, see page 690

220.44-15 CAP

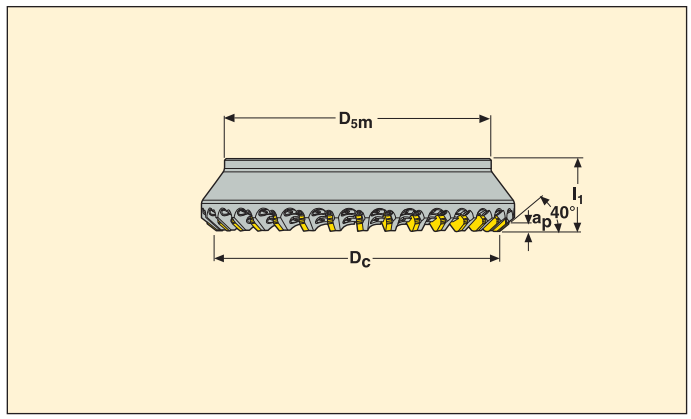

- For insert selection and cutting data recommendations, see page(s) 191 - 191
- For complete insert programme, see page(s) 625

Pitch	Part No.	Support body Part no.	Dimensions in mm a_p	D_c	D_{5m}	dm_m	l_1		KG		Insert
Close											
	R220.44 -9250-15-32	260-425M-1	7	250	220		63	32	10,3	1800	SNH.15..
	-9315-15-40	260-431M-1	7	315	285		63	40	12,3	1600	SNH.15..
	-9400-15-50	260-440M-1	7	400	370		63	50	17,2	1400	SNH.15..
	-9500-15-64	260-450M-1	7	500	470		63	64	33,6	1200	SNH.15..
Super close											
	R220.44 -9250-15-40	260-425M-1	7	250	220		63	40	10,3	1800	SNH.15..
	-9315-15-50	260-431M-1	7	315	285		63	50	12,2	1600	SNH.15..
	-9400-15-64	260-440M-1	7	400	370		63	64	25,0	1400	SNH.15..
	-9500-15-80	260-450M-1	7	500	470		63	80	33,6	1200	SNH.15..

Spare Parts

For cutter	Wedge screw	Wedge key	Insert wedge
		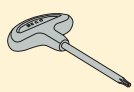	
R220.44-..	LD6018T-T15P	T15P-4	CW0608S

Please check availability in current price and stock-list
Torque value 5,0 Nm, Torque keys, see page 690

220.44-15ST

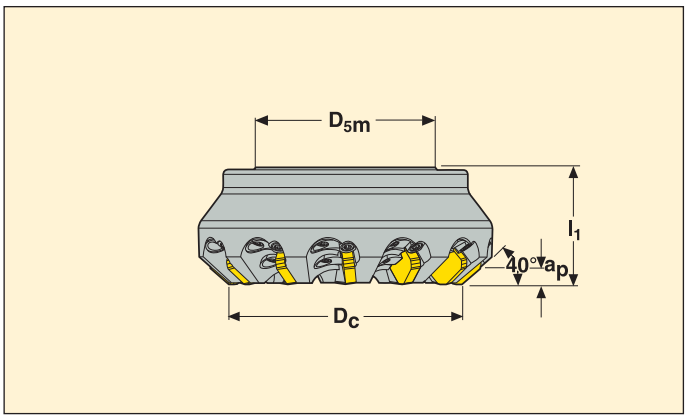

- For insert selection and cutting data recommendations, see page(s) 191 - 191
- For complete insert programme, see page(s) 625

Pitch	Part No.	Type of mounting	Dimensions in mm a_p	D_c	D_{5m}	dm_m	l_1		KG		Insert
Super close											
	R220.44 -0080-15ST	Arbor	7	80	62	27	50	9	1,9	3200	SNHF1504
	-0100-15ST	Arbor	7	100	77	32	50	12	2,8	2900	SNHF1504
	-0125-15ST	Arbor	7	125	90	40	63	15	4,7	2600	SNHF1504
	-8160-15ST	Arbor	7	160	90	40	63	20	7,0	2300	SNHF1504
	-8200-15ST	Arbor	7	200	130	60	63	25	14,0	2000	SNHF1504

Spare Parts

For cutter	Wedge screw	Setting gauge	Key	Insert wedge	Gauge screw
			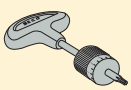		
R220.44-..	LD6018T-T15P	AS6011	T15P-4ST	CW0608	LD6019-T15P

Please check availability in current price and stock-list
Torque value 5,0 Nm, Torque keys, see page 690

220.44-15ST CAP

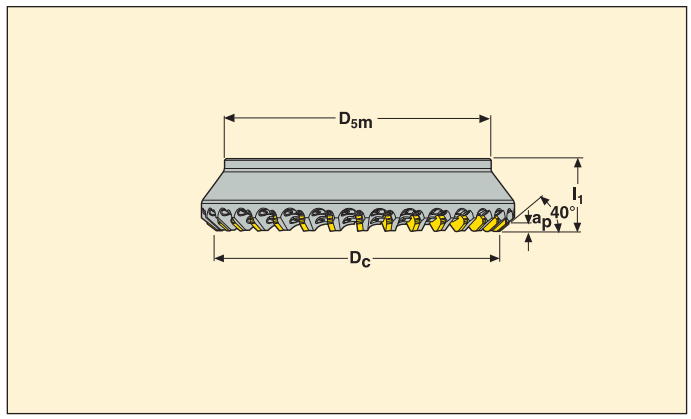

- For insert selection and cutting data recommendations, see page(s) 191 - 191
- For complete insert programme, see page(s) 625

Pitch	Part No.	Support body Part no.	Dimensions in mm a_p	D_c	D_{5m}	dm_m	l_1		KG		Insert
Super close											
	R220.44 -9250-15ST	260-425M-1	7	250	220		63	32	11,2	1800	SNHF1504
	-9315-15ST	260-431M-1	7	315	285		63	40	16,7	1600	SNHF1504
	-9355-15ST	260-435M-1	7	355	340		63	44	17,9	1500	SNHF1504
	-9400-15ST	260-440M-1	7	400	370		63	50	21,0	1400	SNHF1504
	-9500-15ST	260-450M-1	7	500	470		63	64	33,0	1200	SNHF1504

Spare Parts

For cutter	Wedge screw	Setting gauge	Key	Insert wedge	Gauge screw
R220.44-..	LD6018T-T15P	AS6011	T15P-4ST	CW0608	LD6019-T15P

Please check availability in current price and stock-list
Torque value 5,0 Nm, Torque keys, see page 690

220.44-15 – Insert selection

SMG		a_p	f_z		
			100%	30%	10%
P1	SNHF150412TN-M14 MP1500	4,0	0,32	0,36	0,55
P2	SNHF150412TN-M14 MP1500	4,0	0,32	0,36	0,55
P3	SNHF150412TN-M14 MP1500	4,0	0,32	0,34	0,50
P4	SNHF150412TN-M14 MP1500	4,0	0,30	0,34	0,50
P5	SNHF150412TN-M14 MP1500	4,0	0,30	0,32	0,50
P6	SNHF150412TN-M14 MP1500	4,0	0,30	0,32	0,50
P7	SNHF150412TN-M14 MP1500	4,0	0,30	0,32	0,50
P8	SNHF150412TN-M14 MP1500	4,0	0,32	0,34	0,50
P11	SNHF150412TN-M14 MP1500	4,0	0,30	0,32	0,50
K1	SNHF1504XNN-M14-H MK2050	4,0	0,32	0,34	0,50
K2	SNHF1504XNN-M14-H MK2050	4,0	0,28	0,30	0,48
K3	SNHF1504XNN-M14-H MK2050	4,0	0,28	0,30	0,48
K4	SNHF1504XNN-M14-H MK2050	4,0	0,28	0,30	0,48
K5	SNHF1504XNN-M14 MP1500	4,0	0,26	0,28	0,42
K6	SNHF1504XNN-M14 MP1500	4,0	0,28	0,30	0,48
K7	SNHF1504XNN-M14 MP1500	4,0	0,26	0,28	0,42

SMG = Seco material group
f_z = mm/tooth
v_c= m/min
a_e/D_c = %
All cutting data are start values

220.44-15 – Cutting data v_c = (m/min)

SMG	MP1500			MK1500			MK2050		
	100%	30%	10%	100%	30%	10%	100%	30%	10%
P1	245	330	395	—	—	—	—	—	—
P2	235	320	385	—	—	—	—	—	—
P3	205	280	330	—	—	—	—	—	—
P4	185	245	295	—	—	—	—	—	—
P5	175	240	280	—	—	—	—	—	—
P6	200	270	320	—	—	—	—	—	—
P7	185	255	300	—	—	—	—	—	—
P8	175	235	280	—	—	—	—	—	—
P11	180	245	295	—	—	—	—	—	—
K1	185	255	305	230	315	380	220	300	360
K2	165	230	265	210	285	335	200	270	315
K3	140	195	225	180	240	285	170	230	270
K4	135	185	215	170	230	270	160	220	255
K5	80	110	135	105	140	170	100	135	160
K6	120	160	190	150	205	240	140	190	225
K7	105	145	170	130	180	215	125	170	205

220.30-12ST

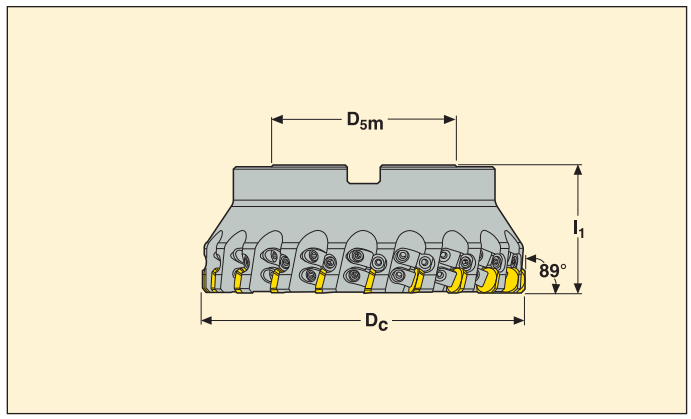

- For insert selection and cutting data recommendations, see page(s) 174
- For complete insert programme, see page(s) 592

Pitch	Part No.	Type of mounting	Dimensions in mm a_p	D_c	D_{5m}	dm_m	l_1		KG		Insert
Super close											
	R220.30 -0080-12ST	Arbor	1	80	56	27	50	9	1,2	5300	SEEX1203..
	-0100-12ST	Arbor	1	100	77	32	50	12	1,9	4800	SEEX1203..
	-0125-12ST	Arbor	1	125	90	40	63	15	3,0	4300	SEEX1203..
	-8160-12ST	Arbor	1	160	90	40	63	20	5,1	3800	SEEX1203..
	-8200-12ST	Arbor	1	200	130	60	63	25	7,2	3300	SEEX1203..

Spare Parts

For cutter	Wedge screw	Setting screw	Setting gauge	Key	Insert wedge	Arbor screw
R220.30-0080	LD6018T-T15P	LD6019-T15P	AS6011	T15P-4ST	CW0608	MC6S12X40
R220.30-0100	LD6018T-T15P	LD6019-T15P	AS6011	T15P-4ST	CW0608	220.17-694
R220.30-0125	LD6018T-T15P	LD6019-T15P	AS6011	T15P-4ST	CW0608	–
R220.30-8160-8200	LD6018T-T15P	LD6019-T15P	AS6011	T15P-4ST	CW0608	–

Please check availability in current price and stock-list
Torque value 3,5 Nm. Torque keys, see page 690

220.30-12ST CAP

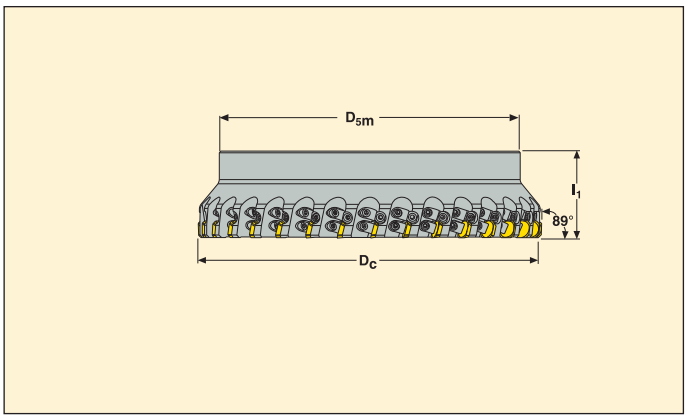

- For insert selection and cutting data recommendations, see page(s) 174
- For complete insert programme, see page(s) 592

Pitch	Part No.	Support body Part no.	Dimensions in mm a_p	D_c	D_{5m}	dm_m	l_1		KG		Insert
Super close											
	R220.30 -9250-12ST	260-425M-1	1	250	220		63	32	9,2	3000	SEEX1203..
	-9315-12ST	260-431M-1	1	315	285		63	40	13,1	2700	SEEX1203..
	-9355-12ST	260-435M-1	1	355	285		63	44	15,9	2500	SEEX1203..

Spare Parts

For cutter	Wedge screw	Setting screw	Setting gauge	Key	Insert wedge
R220.30-9250-9355	LD6018T-T15P	LD6019-T15P	AS6011	T15P-4ST	CW0608

Please check availability in current price and stock-list
Torque value 3,5 Nm. Torque keys, see page 690

220.30-12C

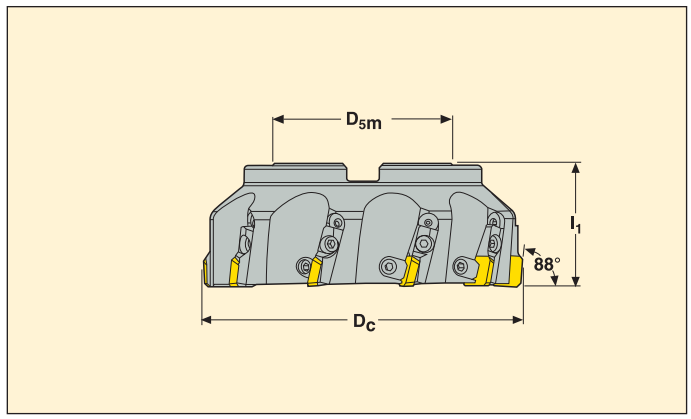

- For insert selection and cutting data recommendations, see page(s) 196
- For complete insert programme, see page(s) 623

Pitch	Part No.	Type of mounting	Dimensions in mm a_p	D_c	D_{5m}	dm_m	l_1		KG		Insert
Normal											
	R220.30 -0080-12C	Arbor	1	80	56	27	50	5	1,1	4800	SEEX1203AFTN
	-0100-12C	Arbor	1	100	77	32	50	6	1,8	4300	SEEX1203AFTN
	-0125-12C	Arbor	1	125	90	40	63	8	3,0	3800	SEEX1203AFTN
	-8160-12C	Arbor	1	160	90	40	63	10	5,5	3300	SEEX1203AFTN
	-8200-12C	Arbor	1	200	130	60	63	12	8,0	3000	SEEX1203AFTN

Spare Parts

For cutter	Wedge screw	Setting gauge	Key	Insert wedge	Cassette screw	Cassette	Arbor screw
R220.30-0080	268-650	AU1114T-T15P	H04-4	CW0810	FS95018	SE12PRC	MF6S12X45
R220.30-0100	268-650	AU1114T-T15P	H04-4	CW0810	FS95018	SE12PRC	220.17-694
R220.30-0125-8250	268-650	AU1114T-T15P	H04-4	CW0810	FS95018	SE12PRC	–

Please check availability in current price and stock-list
Torque value 3,5 Nm. Torque keys, see page 690

220.30-12C

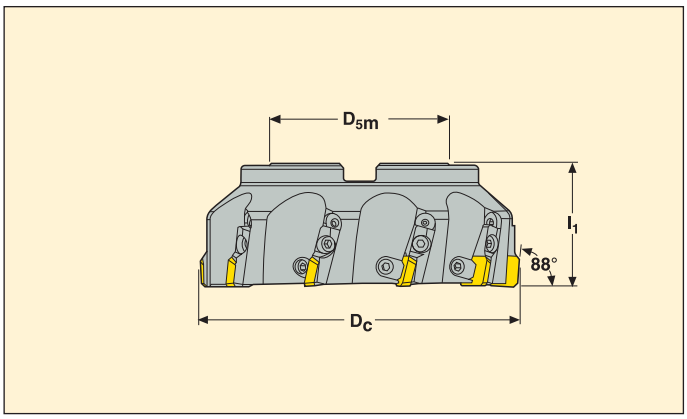

- For insert selection and cutting data recommendations, see page(s) 196
- For complete insert programme, see page(s) 623

Pitch	Part No.	Type of mounting	Dimensions in mm a_p	D_c	D_{5m}	dm_m	l_1		KG		Insert
Close											
	R220.30 -0080-12CT	Arbor	1	80	56	27	50	6	1,1	4800	SEEX1203AFTN
	-0100-12CT	Arbor	1	100	77	32	50	8	1,8	4300	SEEX1203AFTN
	-0125-12CT	Arbor	1	125	90	40	63	10	3,3	3800	SEEX1203AFTN
	-8250-12CT	Arbor	1	250	130	60	63	22	16,5	2700	SEEX1203AFTN

Spare Parts

For cutter	Wedge screw	Setting gauge	Key	Insert wedge	Cassette screw	Cassette	Arbor screw
R220.30-0080	268-650	AU1114T-T15P	H04-4	334.5-640	FS95018	SE12PRC	MF6S12X45
R220.30-0100	268-650	AU1114T-T15P	H04-4	334.5-640	FS95018	SE12PRC	220.17-694
R220.30-0125-8250	268-650	AU1114T-T15P	H04-4	334.5-640	FS95018	SE12PRC	–

Please check availability in current price and stock-list
Torque value 3,5 Nm. Torque keys, see page 690

220.30-12 – Insert selection

SMG		a_p	f_z		
			100%	30%	10%
P1	SEEX1203AFTN-M13 T350M	0,60	0,18	0,20	0,30
P2	SEEX1203AFTN-M13 T350M	0,60	0,19	0,20	0,32
P3	SEEX1203AFTN-M13 T350M	0,60	0,18	0,19	0,30
P4	SEEX1203AFTN-M13 T350M	0,60	0,17	0,19	0,28
P5	SEEX1203AFTN-M13 T350M	0,60	0,17	0,18	0,28
P6	SEEX1203AFTN-M13 T350M	0,60	0,17	0,18	0,28
P7	SEEX1203AFTN-M13 T350M	0,60	0,17	0,18	0,28
P8	SEEX1203AFTN-MD14 F15M	0,60	0,19	0,20	0,32
P11	SEEX1203AFTN-MD14 F15M	0,60	0,18	0,20	0,30
M1	SEEX1203AFTN-M13 T350M	0,60	0,19	0,20	0,32
M2	SEEX1203AFTN-M13 T350M	0,60	0,17	0,18	0,28
M3	SEEX1203AFTN-M13 T350M	0,48	0,14	0,15	0,22
M4	SEEX1203AFTN-M13 T350M	0,36	0,12	0,13	0,20
M5	SEEX1203AFTN-M13 T350M	0,36	0,12	0,13	0,20
K1	SEEX1203AFTN-MD14 MH1000	0,60	0,20	0,22	0,34
K2	SEEX1203AFTN-MD14 MH1000	0,60	0,18	0,20	0,30
K3	SEEX1203AFTN-MD14 MH1000	0,60	0,18	0,20	0,30
K4	SEEX1203AFTN-MD14 MH1000	0,60	0,18	0,20	0,30
K5	SEEX1203AFTN-MD14 MH1000	0,60	0,16	0,18	0,28
K6	SEEX1203AFTN-MD14 MH1000	0,60	0,18	0,20	0,30
K7	SEEX1203AFTN-MD14 MH1000	0,60	0,16	0,18	0,28
H5	SEEX1203AFTN-MD14 F15M	0,48	0,12	0,14	0,20
H8	SEEX1203AFTN-MD14 F15M	0,42	0,095	0,10	0,16
H11	SEEX1203AFTN-MD14 F15M	0,48	0,12	0,14	0,20
H12	SEEX1203AFTN-MD14 F15M	0,48	0,12	0,14	0,20
H21	SEEX1203AFTN-MD14 F15M	0,42	0,095	0,10	0,16

SMG = Seco material group
f_z = mm/tooth
v_c= m/min
a_e/D_c = %
All cutting data are start values

220.30-12 – Cutting data v_c = (m/min)

SMG	T350M			F15M			MK1500			MH1000			H15		
	100%	30%	10%	100%	30%	10%	100%	30%	10%	100%	30%	10%	100%	30%	10%
P1	210	275	330	210	280	340	—	—	—	255	340	410	—	—	—
P2	200	270	315	205	275	325	—	—	—	250	330	390	—	—	—
P3	175	235	275	180	240	285	—	—	—	220	295	345	—	—	—
P4	155	205	250	160	215	250	—	—	—	190	260	300	—	—	—
P5	150	200	235	155	205	245	—	—	—	185	245	295	—	—	—
P6	170	225	265	175	230	275	—	—	—	210	275	330	—	—	—
P7	160	215	250	165	215	255	—	—	—	195	260	310	—	—	—
P8	150	200	235	150	205	240	—	—	—	185	245	290	—	—	—
P11	155	205	245	160	210	250	—	—	—	190	255	300	—	—	—
M1	155	210	245	165	220	260	—	—	—	—	—	—	—	—	—
M2	130	175	205	140	185	220	—	—	—	—	—	—	—	—	—
M3	105	140	165	110	150	175	—	—	—	—	—	—	—	—	—
M4	80	110	125	85	115	135	—	—	—	—	—	—	—	—	—
M5	70	90	105	70	95	115	—	—	—	—	—	—	—	—	—
K1	160	215	250	165	215	255	255	340	400	200	260	310	—	—	—
K2	145	190	225	145	195	230	230	300	360	175	235	280	—	—	—
K3	120	160	190	125	165	195	195	255	305	150	200	235	—	—	—
K4	115	155	180	120	155	185	185	245	290	145	190	225	—	—	—
K5	70	95	110	75	95	115	115	150	175	90	115	135	—	—	—
K6	100	135	160	105	140	165	160	215	255	125	165	200	—	—	—
K7	90	120	140	95	120	145	145	190	225	115	150	175	—	—	—
H5	34	44	50	34	45	55	—	—	—	42	55	65	—	—	—
H8	36	47	55	37	49	55	—	—	—	44	60	70	—	—	—
H11	43	55	65	44	60	70	—	—	—	55	70	85	—	—	—
H12	70	90	110	70	95	110	—	—	—	85	115	135	—	—	—
H21	36	47	55	37	49	55	—	—	—	44	60	70	—	—	—

220.88-15M

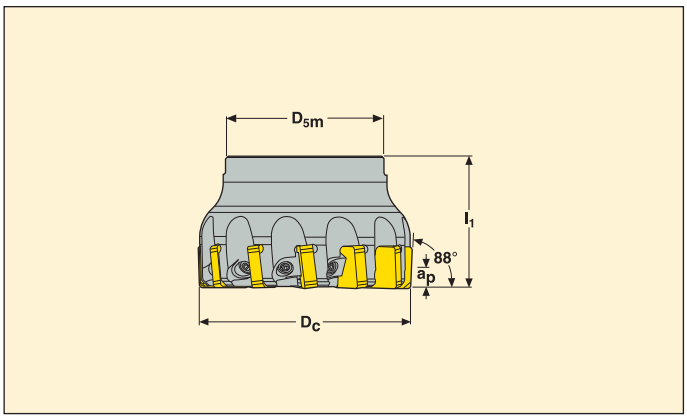

- For insert selection and cutting data recommendations, see page(s) 198
- For complete insert programme, see page(s) 625

Pitch	Part No.	Type of mounting	Dimensions in mm a_p	D_c	D_{5m}	dm_m	l_1		KG		Insert
Close											
	R220.88 -0063-15-5M	Arbor	12	63	47	22	40	5	0,6	3600	SNH.15..
	-0080-15-8M	Arbor	12	80	62	27	50	8	1,3	3200	SNH.15..
	-0100-15-10M	Arbor	12	100	77	32	50	10	1,8	2900	SNH.15..
	-0125-15-14M	Arbor	12	125	90	40	63	14	3,3	2600	SNH.15..
	-8160-15-18M	Arbor	12	160	90	40	63	18	5,5	2300	SNH.15..
Super close											
	R220.88 -0063-15-7M	Arbor	12	63	47	22	40	7	0,6	3600	SNH.15..
	-0080-15-12M	Arbor	12	80	62	27	50	12	1,2	3200	SNH.15..
	-0100-15-14M	Arbor	12	100	77	32	50	14	1,7	2900	SNH.15..
	-0125-15-18M	Arbor	12	125	90	40	63	18	3,2	2600	SNH.15..

Spare Parts

For cutter	Wedge screw	Wedge key	Insert wedge	Arbor screw
		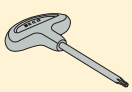		
R220.88-0063	LD6018T-T15P	T15P-4	CW0608S	220.17-691
R220.88-0080	LD6018T-T15P	T15P-4	CW0608S	MC6S12X40
R220.88-0100-8160	LD6018T-T15P	T15P-4	CW0608S	–

Please check availability in current price and stock-list
Torque value 5,0 Nm, Torque keys, see page 690

220.88-15 – Insert selection

SMG		a_p	f_z		
			100%	30%	10%
P1	SNHF150412TN-M14 MP1500	7,0	0,20	0,22	0,34
P2	SNHF150412TN-M14 MP1500	7,0	0,20	0,22	0,34
P3	SNHF150412TN-M14 MP1500	7,0	0,19	0,22	0,32
P4	SNHF150412TN-M14 MP1500	7,0	0,19	0,20	0,32
P5	SNHF150412TN-M14 MP1500	7,0	0,19	0,20	0,32
P6	SNHF150412TN-M14 MP1500	7,0	0,18	0,20	0,30
P7	SNHF150412TN-M14 MP1500	7,0	0,18	0,20	0,30
P8	SNHF150412TN-M14 MP1500	7,0	0,19	0,22	0,32
P11	SNHF150412TN-M14 MP1500	7,0	0,18	0,20	0,30
K1	SNHF150412TN-M14-H MK2050	7,0	0,20	0,22	0,34
K2	SNHF150412TN-M14-H MK2050	7,0	0,18	0,20	0,30
K3	SNHF150412TN-M14-H MK2050	7,0	0,18	0,20	0,30
K4	SNHF150412TN-M14-H MK2050	7,0	0,18	0,20	0,30
K5	SNHF150412TN-M14 MP1500	7,0	0,17	0,18	0,28
K6	SNHF150412TN-M14 MP1500	7,0	0,19	0,20	0,32
K7	SNHF150412TN-M14 MP1500	7,0	0,17	0,18	0,28

SMG = Seco material group
f_z = mm/tooth
v_c= m/min
a_e/D_c = %
All cutting data are start values

220.88-15 – Cutting data v_c = (m/min)

SMG	MP1500			MK1500			MK2050		
	100%	30%	10%	100%	30%	10%	100%	30%	10%
P1	260	345	410	—	—	—	—	—	—
P2	255	335	400	—	—	—	—	—	—
P3	220	290	350	—	—	—	—	—	—
P4	195	260	305	—	—	—	—	—	—
P5	185	250	295	—	—	—	—	—	—
P6	210	280	335	—	—	—	—	—	—
P7	200	265	315	—	—	—	—	—	—
P8	185	245	295	—	—	—	—	—	—
P11	195	260	310	—	—	—	—	—	—
K1	200	265	315	250	335	395	230	310	365
K2	175	240	280	220	300	350	210	275	330
K3	150	200	235	185	250	295	175	235	280
K4	145	190	225	180	240	280	170	220	265
K5	90	120	140	110	150	175	105	135	160
K6	125	170	200	160	210	250	150	195	235
K7	110	150	180	140	190	225	135	175	205

R220.60-19CM

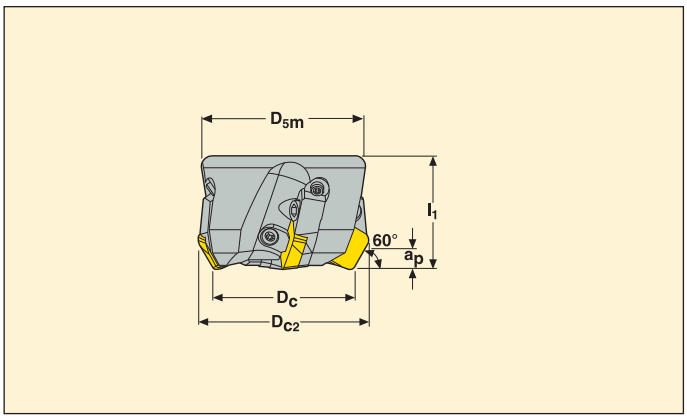

- For insert selection and cutting data recommendations, see page(s) 200
- For complete insert programme, see page(s) 632

Pitch	Part No.	Type of mounting	Dimensions in mm a_p	D_c	D_{c2}	D_{5m}	dm_m	l_1		KG		Insert
Normal												
	R220.60 -0063-19-4CM	Arbor	12	63	78	47	22	50	4	1,1	3700	SP..1906ZETR
	-0080-19-5CM	Arbor	12	80	95	62	27	50	5	1,7	3300	SP..1906ZETR
	-0100-19-6CM	Arbor	12	100	115	77	32	50	6	2,4	2900	SP..1906ZETR
	-0125-19-8CM	Arbor	12	125	140	90	40	63	8	4,0	2600	SP..1906ZETR
	-8160-19-10CM	Arbor	12	160	175	128	40	63	10	6,3	2300	SP..1906ZETR
	-8200-19-12CM	Arbor	12	200	175	168	60	63	12	9,0	2000	SP..1906ZETR
	-8250-19-16CM	Arbor	12	250	175	218	60	63	16	20,0	1800	SP..1906ZETR

Spare Parts

For cutter	Wedge screw	Wedge key	Setting gauge	Insert wedge	Cassette screw	Cassette	Arbor screw
R220.66-0063	LD8020-T25P	T25P-4	AU1114T-T15P	CW0813	FS96018	SP19DRM	220.17-692
R220.66-0080	LD8020-T25P	T25P-4	AU1114T-T15P	CW0813	FS96018	SP19DRM	MC6S12X35
R220.66-0100-8250	LD8020-T25P	T25P-4	AU1114T-T15P	CW0813	FS96018	SP19DRM	–

Please check availability in current price and stock-list
Torque value 1,2 Nm, Torque keys, see page 690

220.69 – Insert selection

SMG		a_p	f_z 100%	f_z 30%	f_z 10%
P1	SPER1906ZETR-M17 T350M	7,0	0,26	0,28	0,44
P2	SPER1906ZETR-M17 T350M	7,0	0,26	0,28	0,44
P3	SPER1906ZETR-M17 T350M	7,0	0,24	0,28	0,42
P4	SPER1906ZETR-M17 T350M	7,0	0,24	0,26	0,42
P5	SPER1906ZETR-M17 T350M	7,0	0,24	0,26	0,40
P6	SPER1906ZETR-M17 T350M	7,0	0,24	0,26	0,40
P7	SPER1906ZETR-M17 T350M	7,0	0,24	0,26	0,40
P8	SPER1906ZETR-M17 T350M	7,0	0,24	0,28	0,42
P11	SPER1906ZETR-M17 T350M	7,0	0,24	0,26	0,40
M1	SPER1906ZETR-M17 T350M	7,0	0,26	0,28	0,44
M2	SPER1906ZETR-M17 T350M	7,0	0,24	0,26	0,40
M3	SPER1906ZETR-M17 T350M	6,0	0,19	0,20	0,32
M4	SPER1906ZETR-M17 T350M	4,5	0,17	0,18	0,28
M5	SPER1906ZETR-M17 T350M	4,5	0,17	0,18	0,28
K1	SPEN1906ZETR-D25 MP1500	7,0	0,40	0,44	0,65
K2	SPEN1906ZETR-D25 MP1500	7,0	0,36	0,40	0,60
K3	SPEN1906ZETR-D25 MP1500	7,0	0,36	0,40	0,60
K4	SPEN1906ZETR-D25 MP1500	7,0	0,36	0,40	0,60
K5	SPEN1906ZETR-D25 MP1500	7,0	0,32	0,36	0,55
K6	SPEN1906ZETR-D25 MP1500	7,0	0,36	0,40	0,60
K7	SPEN1906ZETR-D25 MP1500	7,0	0,32	0,36	0,55

SMG = Seco material group
f_z = mm/tooth
v_c= m/min
a_e/D_c = %
All cutting data are start values

R220.60 – Cutting data v_c = (m/min)

SMG	MP1500 100%	MP1500 30%	MP1500 10%	MP2500 100%	MP2500 30%	MP2500 10%	T350M 100%	T350M 30%	T350M 10%	MK1500 100%	MK1500 30%	MK1500 10%
P1	220	300	355	195	265	315	185	250	300	—	—	—
P2	210	285	345	185	255	305	175	240	285	—	—	—
P3	185	255	295	165	225	265	155	210	250	—	—	—
P4	165	225	270	145	200	240	135	185	225	—	—	—
P5	160	215	255	140	190	230	135	180	215	—	—	—
P6	175	245	290	155	215	255	150	205	240	—	—	—
P7	165	230	270	150	205	240	140	195	225	—	—	—
P8	155	215	250	135	190	220	130	180	210	—	—	—
P11	165	225	265	145	200	235	135	185	220	—	—	—
M1	—	—	—	135	180	220	135	185	220	—	—	—
M2	—	—	—	115	150	185	115	155	185	—	—	—
M3	—	—	—	95	125	150	95	125	150	—	—	—
M4	—	—	—	70	95	120	75	100	115	—	—	—
M5	—	—	—	60	80	100	60	80	100	—	—	—
K1	165	225	275	145	200	245	140	190	225	225	310	365
K2	150	205	245	135	180	215	125	170	205	205	275	330
K3	125	170	205	110	150	185	105	145	170	175	235	280
K4	120	165	195	105	145	175	100	135	165	165	220	265
K5	75	100	120	65	90	105	60	85	100	100	140	165
K6	105	145	175	95	130	155	90	120	145	145	195	235
K7	95	130	155	85	115	135	80	110	130	130	175	210

230.19

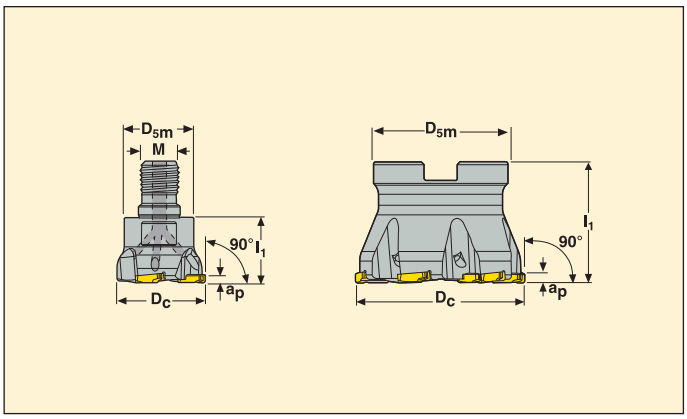

- For insert selection and cutting data recommendations, see page(s) 202 - 203
- For complete insert programme, see page(s) 626

Part No.		Type of mounting	Dimensions in mm							KG		Insert
			a_p	D_c	D_{5m}	dm_m	M	l_1				
R230.19	-1030.RE-SN1103-3A	Combimaster	2,6	30	18,5	–	M10	20	3	0,1	18900	SNHQ1103xxR
	-1232.RE-SN1103-3A	Combimaster	2,6	32	23	–	M12	20	3	0,1	18300	SNHQ1103xxR
	-1640.RE-SN1203-3A	Combimaster	3,1	40	30	–	M16	28	3	0,2	16700	SNHQ1203xxR
R230.19	-0050-SN1203-5A	Arbor	3,1	50	42	22	–	40	5	0,3	12300	SNHQ1203xxR
	-0063-SN1203-6A	Arbor	3,1	63	50	27	–	45	6	0,6	10900	SNHQ1203xxR
	-0080-SN1203-8A	Arbor	3,1	80	62	27	–	45	8	1,0	9700	SNHQ1203xxR
	-0100-SN1203-10A	Arbor	3,1	100	77	32	–	50	10	1,7	8700	SNHQ1203xxR

Spare Parts

For cutter	Insert screw	Insert key	Arbor screw
		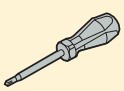	
R230.19-1103	C93505-T09P	T09P-3	–
R230.19-1203	C94006-T15P	T15P-4	–
R230.19-1203 dia 50	C94006-T15P	T15P-4	–
R230.19-1203 dia 63-80	C94006-T15P	T15P-4	MC6S12X35
R230.19-1203 dia 100	C94006-T15P	T15P-4	MC6S16X40

Please check availability in current price and stock-list
Torque value SN1103 2,0, SN1203 3,5. Torque keys, see page 690

R230.19 – Insert selection

SMG		a_p	f_z		
			100%	30%	10%
P1	SNHQ....-M07 F40M	1,9	0,12	0,13	0,20
P2	SNHQ....-M07 F40M	1,9	0,12	0,13	0,20
P3	SNHQ....-M07 F40M	1,9	0,12	0,13	0,19
P4	SNHQ....-M07 F40M	1,9	0,11	0,12	0,19
P5	SNHQ....-M07 F40M	1,9	0,11	0,12	0,19
P6	SNHQ....-M07 F40M	1,9	0,11	0,12	0,18
P7	SNHQ....-M07 F40M	1,9	0,11	0,12	0,18
P8	SNHQ....-M07 F40M	1,9	0,12	0,13	0,19
P11	SNHQ....-M07 F40M	1,9	0,11	0,12	0,18
M1	SNHQ....-M07 F40M	1,9	0,12	0,13	0,20
M2	SNHQ....-M07 F40M	1,9	0,11	0,12	0,19
M3	SNHQ....-M07 F40M	1,5	0,095	0,10	0,16
M4	SNHQ....-M07 F40M	1,1	0,090	0,095	0,15
M5	SNHQ....-M07 F40M	1,1	0,090	0,095	0,15
K1	SNHQ....-M07 F40M	1,9	0,12	0,13	0,20
K2	SNHQ....-M07 F40M	1,9	0,11	0,12	0,19
K3	SNHQ....-M07 F40M	1,9	0,11	0,12	0,19
K4	SNHQ....-M07 F40M	1,9	0,11	0,12	0,19
K5	SNHQ....-M07 F40M	1,9	0,10	0,11	0,17
K6	SNHQ....-M07 F40M	1,9	0,11	0,12	0,19
K7	SNHQ....-M07 F40M	1,9	0,10	0,11	0,17
N1	SNHQ....-E05 H25	1,9	0,13	0,14	0,22
N2	SNHQ....-E05 H25	1,9	0,13	0,14	0,22
N3	SNHQ....-E05 H25	1,9	0,13	0,14	0,22
N11	SNHQ....-E05 H25	1,9	0,13	0,14	0,22
S1	SNHQ....-M07 F40M	1,1	0,090	0,095	0,15
S2	SNHQ....-M07 F40M	1,1	0,090	0,095	0,15
S3	SNHQ....-M07 F40M	1,1	0,080	0,090	0,14
S11	SNHQ....-M07 F40M	1,3	0,095	0,11	0,16
S12	SNHQ....-M07 F40M	1,3	0,095	0,11	0,16
S13	SNHQ....-M07 F40M	1,1	0,090	0,095	0,15
H5	SNHQ....-M07 F40M	1,5	0,080	0,085	0,13
H8	SNHQ....-M07 F40M	1,3	0,065	0,070	0,10
H11	SNHQ....-M07 F40M	1,5	0,080	0,085	0,13
H12	SNHQ....-M07 F40M	1,5	0,080	0,085	0,13
H21	SNHQ....-M07 F40M	1,3	0,065	0,070	0,10

SMG = Seco material group
f_z = mm/tooth
v_c= m/min
a_e/D_c = %
All cutting data are start values

R230.19 – Cutting data v_c = (m/min)

	MP2500			F30M			F40M			MM4500			H25		
SMG	100%	30%	10%	100%	30%	10%	100%	30%	10%	100%	30%	10%	100%	30%	10%
P1	290	385	450	230	305	360	220	290	340	180	240	280	—	—	—
P2	275	365	440	220	290	350	210	280	335	175	230	275	—	—	—
P3	245	320	385	195	255	305	185	245	290	150	200	240	—	—	—
P4	215	285	340	170	225	270	165	215	255	135	180	210	—	—	—
P5	210	275	320	165	220	255	160	210	245	130	170	200	—	—	—
P6	235	310	365	190	245	290	180	235	280	145	190	230	—	—	—
P7	225	295	345	175	235	275	170	220	260	140	180	215	—	—	—
P8	205	270	320	165	215	255	155	205	245	125	170	200	—	—	—
P11	215	285	335	170	225	270	165	215	255	135	175	210	—	—	—
M1	200	265	315	180	235	280	170	225	270	150	200	235	—	—	—
M2	170	225	260	150	200	230	145	190	220	125	165	195	—	—	—
M3	135	175	210	120	155	185	115	150	180	100	130	155	—	—	—
M4	105	140	160	90	120	145	90	115	140	75	105	120	—	—	—
M5	85	115	135	75	100	120	75	95	115	65	85	100	—	—	—
K1	220	290	350	175	230	275	165	220	265	—	—	—	—	—	—
K2	200	265	305	160	210	245	150	200	230	—	—	—	—	—	—
K3	170	220	260	135	175	205	130	170	195	—	—	—	—	—	—
K4	160	210	245	130	170	195	120	160	185	—	—	—	—	—	—
K5	95	130	150	75	105	120	75	100	115	—	—	—	—	—	—
K6	140	185	220	115	150	175	105	140	165	—	—	—	—	—	—
K7	125	165	195	100	130	155	95	125	145	—	—	—	—	—	—
N1	820	1100	1300	650	870	1025	620	820	980	—	—	—	600	800	940
N2	660	880	1050	520	700	830	500	670	790	—	—	—	485	650	760
N3	440	590	700	350	465	560	335	445	530	—	—	—	325	430	510
N11	500	670	800	400	530	640	380	510	600	—	—	—	370	490	580
S1	50	65	80	43	55	65	41	55	65	23	31	37	—	—	—
S2	41	55	65	35	46	55	33	44	50	19	25	30	—	—	—
S3	36	48	55	30	41	48	29	39	45	17	22	26	—	—	—
S11	70	95	110	60	80	95	55	75	90	33	44	50	65	85	100
S12	41	55	65	35	46	55	33	44	50	25	34	39	50	65	80
S13	33	43	50	28	37	44	26	35	41	20	27	32	—	—	—
H5	42	55	65	36	48	55	35	45	55	—	—	—	—	—	—
H8	44	60	70	38	50	60	37	48	55	—	—	—	—	—	—
H11	55	70	80	47	60	70	44	60	70	—	—	—	—	—	—
H12	85	115	135	75	100	115	70	95	110	—	—	—	—	—	—
H21	44	60	70	38	50	60	37	48	55	—	—	—	—	—	—

Disc milling

A full range of cutters for all kinds of disc Milling operations

Seco's disc mills, available from 1.1 to 32 mm in width, offer a wide range of cutter diameters and connection types suitable for all relevant machine tools and disc milling applications.

-The core of the range consists of 4 main cutter families

Min

Max

335.10 for narrow slotting and sawing
Width 2,25-4,1mm
Page: 196

335.19 for small width of cut and sawing
Fixed pockets
Width 4-12mm
Page: 197

335.18 for medium width of cut
Fixed and adjustable width
Width 8-20mm
Page: 197

335.25 for large width of cut
Fixed and adjustable width
Width 13,5 -32mm
Page: 198

- And 3 other families dedicated to specific disc milling operation

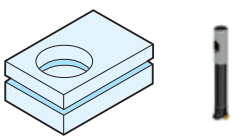

335.15 for circlips groove and narrow slotting
Width 1.1-5.15mm
Page: 196

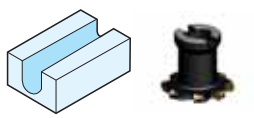

335.29 equipped with round insert - full radius profile
and copy milling
Width 5 - 16 mm
Page: 198

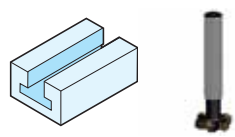

395.19 for T-slots
Width 11 - 22 mm
Page: 275

Code keys

For fixed pocket disc milling cutters

-Arbor type (A or B-type)

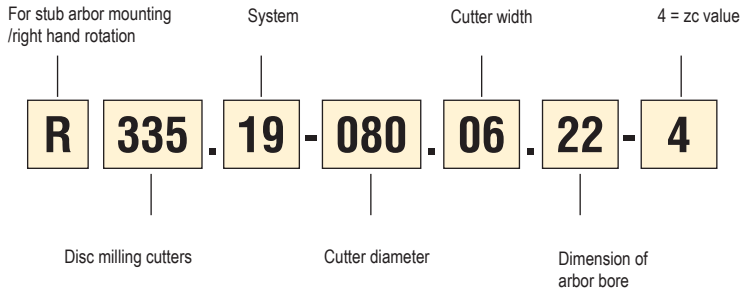

-Shank type (Cylindrical or Combimaster type)

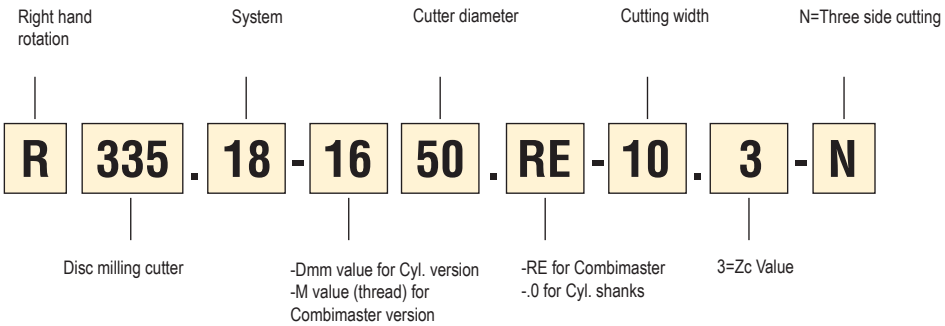

For adjustable disc milling cutters

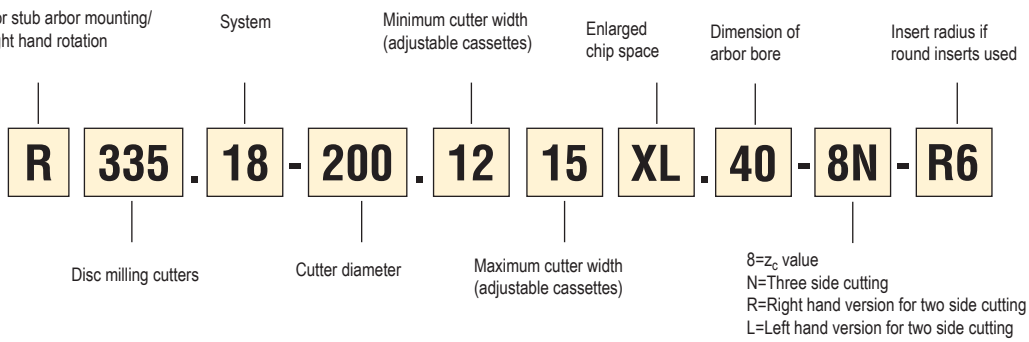

Full side and face - fixed pocket design

System	Insert	a_p	Application	Diameters (mm) available and max depth of cut (mm)												Max no. of cutting edges	Radii available (mm)	See page
				24	32	40	50	63	80	100	125	160	200	250	315			
335.15	335.15	1,1 - 2,65	Circlip grooves	3	3			3								2	-	212
		3,15 - 5,15						5										
335.10	150.10	2,25/2,5						16	22	29	34	39				1	R0,15/R0,3	215-216
		3,1						16	22	29	34	39	59	84	117			
		4,1						16	22	29	34	39	59	84	117			
335.19	SNHQ / 335.19	4				11	13	13	22	24	30	42				4	R0,2/R0,4/ R0,8/ R1,2/R1,6/R2,0/ R2,4/ R3,0 /R3,1/ R3,5/ R4,0/R5,0/ R6,0	221-225
		5				11	13	13	22	25	31	43						
		6					13	14	22	25	31	43	61	86				
		7/ 8						13	22	26	32	44	62	87				
		10								27	33	46	63	88				
		12								27	29	45	64	89				
335.18 LNK	LNKT	8			9	12	15	15	23	27	33					4	R04/R0,8/R1,6/R2,0/ R2,4/ R3,1/ R4,0	232-234
		10			9	12	15	15	24	28	34							
		12					15	15	24	28	34							
		14						15	23	26	34	51						
		17							24	26	33	50						
		20							24	26	34	51						
335.25	XNHQ	15							22	25	32	51	64			4	R04,/R0,8/R1,2/R1,6/ R2,0/R2,4/ R3,1/ R4,0 /R5,0/R6,0	237
		20								25	32	51	64	88				
		25									33	50	62	87				

Full radius profile – fixed pocket design

System	Insert	a_p	Application	Diameters (mm) available and max z_c (no. of teeth)												Max no. of cutting edges	Radii available (mm)	See page
				25	32	40	50	63	80	100	125	160	200	250	315			
335.19	SNHQ / 335.19	4				11	13	13	22	24	30	42				4	R2,0/R3,0/ R3.5 - R4,0/ R5,0/ R6,0	221-225
		6					13	14	22	25	31	43	61	86				
		7/8						13	22	26	32	44	62	87				
		10								27	33	46	63	88				
		12								27	29	45	64	89				
335.29	Round insert	5		6	8	10	12									4	R2,5/R3,0/ R4,0/ R5,0/R6,0	240
		6		6	8	10	12	15										
		8			8	10	12	15	20									
		10					12	15	20									
		12	Full radius				12	15	20									

Basic choice (X indicates the maximum radial depth of cut "a_r" in slotting in mm) X

Alternative choice (X indicates the maximum radial depth of cut "a_r" in slotting in mm) X

Circlip groove and shallow slotting

Sawing

Full side and face

Full radius profile

Full side and and face - adjustable in width

System	Insert	a_p	Applica-tion	Diameters (mm) available and max depth of cut (mm)							Max no. of cutting edges	Radii available (mm)	See page
				80	100	125	160	200	250	315			
335.18 LNK	LNK	8 - 10		14	27	32	50	63	88	121	4	R0,4 -R0,8 - R1,6 - R2,0 - R2,4 - R3,1 - R4	235-236
		10 - 12		14	27	32	50	63	88	121			
		12 - 15		14	27	32	50	63	88	121			
335.25	XNHQ	13.5 - 17			24	32	50	63	88	121	4	R0,4 - R0,8 - R1,2 - R1,6 - R2,0 - R2,4 - R3,1 - R4 - R5 - R6	238-239
		17 - 21			24	32	50	63	88	121			
		21 - 26				32	50	63	88	113			
		26 - 32					50	63	88	113			
335.18	Round insert	8 - 10	Full radius	15	28	33	51	63	88	121	4	R4	241-242
		10 - 12		15	28	33	51	63	88	121		R5	
		12 - 15		15	28	33	51	63	88	121		R6	
		16 - 18.5				34	52	64	90	122		R8	

Half side and face

System	Insert	a_p	Applica-tion	Diameters (mm) available and max depht of cut (mm)							Max no. of cutting edges	Radii available (mm)	See page
				80	100	125	160	200	250	315			
335.18 LNK	LNK	≤5		14	27	32	50	63	88	121	2+2	R0,4 - R0,8 - R1,6 - R2,0 - R2,4 - R3,1 - R4	243-244, 249-250
		≤6		14	27	32	50	63	88	121			
		≤7.5		14	27	32	50	63	88	121			
335.25	XNHQ	≤8,5			24	32	50	63	88	121	2+2	R0,4 - R0,8 - R1,2 - R1,6 - R2,0 - R2,4 - R3,1 - R4 - R5 - R6	245-246, 251-252
		≤11			24	32	50	63	88	121			
		≤13				32	50	63	88	113			
		≤16					50	63	88	113			
335.18	Round insert	≤4	Full radius	15	28	33	51	63	88	121	4	R4	MN2015 236-237, 242-243
		≤5		15	28	33	51	63	88	121		R5	
		≤6		15	28	33	51	63	88	121		R6	
		≤8				34	52	64	90	122		R8	

Basic choice (X indicates the maximum radial depth of cut "a_r" in slotting in mm) X

Alternative choice (X indicates the maximum radial depth of cut "a_r" in slotting in mm) X

Full side and face

Full radius profile

Half side and face

Half radius profile

335.15... First choice for circlip grooves and narrow slotting – Width of cut from 1,1 to 5,15 mm

Applications

Width of cut 1.1 to 5.1 5mm

Cylindrical: 24 and 34 mm

B Type: 63 mm

Basic choice for grooving.

Dia 24-63 mm

2 cutting edges per insert.
a_p = 1,1-5,15 mm.

Insert designation:
R335.15-13..
R335.15-18..

Edge form: Chamfer

Product pages: 212
Insert page: 650-651
Cutting data: 213-214
Add. information: 212

335.10... First choice for cutting-off and slim slotting – Width of cut from 2,25 to 4,1 mm

Applications

Width of cut 2.25 to 4.1 mm

Cylindrical:
63-80 mm

A Type:
80-315 mm

B Type:
63-160 mm

Combimaster:
63-80 mm

Basic choice for grooving, sawing, full side and face

Dia 63-315 mm

1 cutting edge per insert.
a_p = 2,25/2.5/3.1/4,1 mm

Insert designation: 150.10

Edge form: Corner radius 0,15/0,20

Product pages: 215-216
Insert page: 644
Cutting data: 219-220
Add. information: 217-218

335.19... Fixed pocket - small width of cut 4 to 12mm

Applications

Width of cut 4 to 12 mm

Combimaster
Ø 40/50/63 mm

Cylindrical
Ø 50/63/80 mm

A Type
Ø 63-250 mm

B Type:
Ø 63-160 mm

Basic choice for sawing and slotting

Can be used for full radius profile with radii inserts.

Dia 40-250 mm
2 or 4 cutting edges per insert depending on radii.
a_p = 4-12 mm.

Note: In full side and face operation, use left and right hand inserts.

Insert designation:
SNHQ inserts are the first choice.
335.19 inserts are alternative choice.

Product pages: 209-213
Insert page: 609-613, 630
Cutting data: 216-219
Add. information: 214-215

Edge form: Corner radii 0,2-6 mm

335.18 LNK...Fixed pocket and adjustable design - Medium width of cut :8 to 20mm

Applications

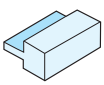

Width of cut 8 to 20 mm

Combimaster:
Dia 50 mm
Fixed pocket

Cylindrical:
Dia 32-80 mm
Fixed pocket

A Type:
Dia 80-315 mm
Fixed and
adjustable pocket

A Type:
Dia 63-250 mm
Fixed and
adjustable pocket

Fixed pocket and adjustable version
For full side and half side and face

Dia 32-315 mm

1 to 4 cutting edges per insert depending on radii.
a_p = 8-20 mm

Insert designation:
LNK..05..
LNK..06..
LNK..08..

Product pages: 220-224, 232-233, 238-239
Insert page: 587-588
Cutting data: 251-252
Add. information: 244-248

Edge form: Corner radii 0,4-4,0 mm

335.25 Fixed pocket and adjustable design - Large width of cut: 13,5 to 32 mm

Applications

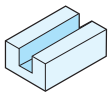

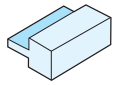

A type dia 125-315 mm
Fixed pocket and adjustable

B type dia 80-315 mm
Fixed pocket and adjustable

Width of cut 21 to 32 mm

Fixed pocket and adjustable version. For full side and half side and face

Dia 80-315 mm
4 cutting edges per insert depending on radii.

a_p = 13,5-32 mm.

Insert designation:
XNHQ and LNHQ

Edge form: Corner radii 0,8-6,0 mm

Product pages: 227-228, 235, 241
Insert page: 620, 589
Cutting data: 253-256
Add. information: 244-247, 249

335.29/335.18 Equipped with round inserts

Applications

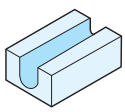

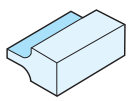

Cylindrical and
Combimaster
Dia 25-50 mm
Fixed pocket

B Type:
Dia 63-250 mm
Fixed and
adjustable pocket

A Type:
Dia 80-315 mm
Adjustable pocket

Basic choice for full radius profiling, half radius profile and grooving.

Dia 25-320 mm

a_p = 5-16 mm

Insert designation:
RD..05..
RD..06..
RD..07..
RD..08..
RD..10..
RP..12..
RP..16..

Edge form: Corner radii 2,5-8 mm

Product pages: 229-231, 236-237, 242-243
Insert page: 597-598
Cutting data: 261-274
Add. information: 244-247, 250

335.18 and 335.25 - Adjustable disc milling cutter in width - Cassette version

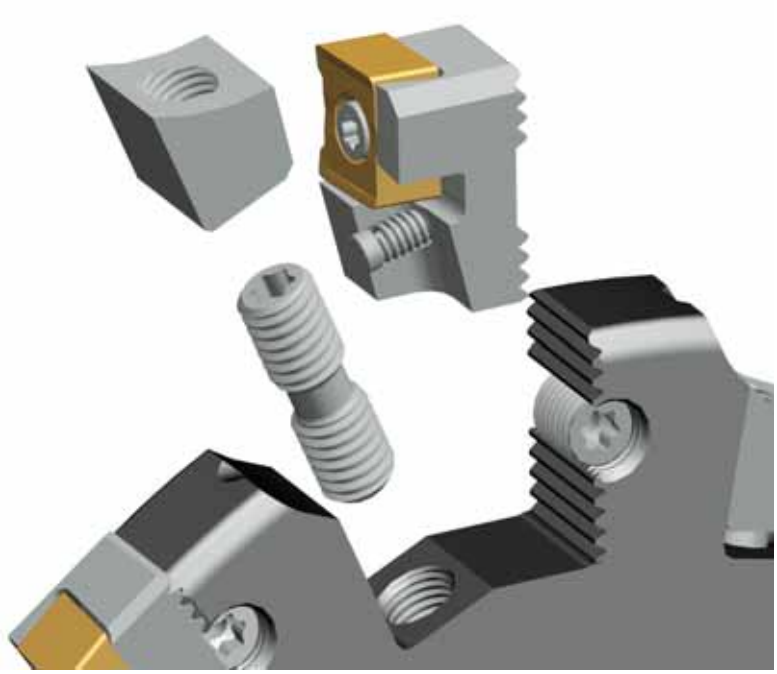

For circlip grooves milling cutter R335.15

Width 1,1-5,15 mm

- For insert selection and cutting data recommendations, see page(s) 213 - 214
- For complete insert programme, see page(s) 650-651

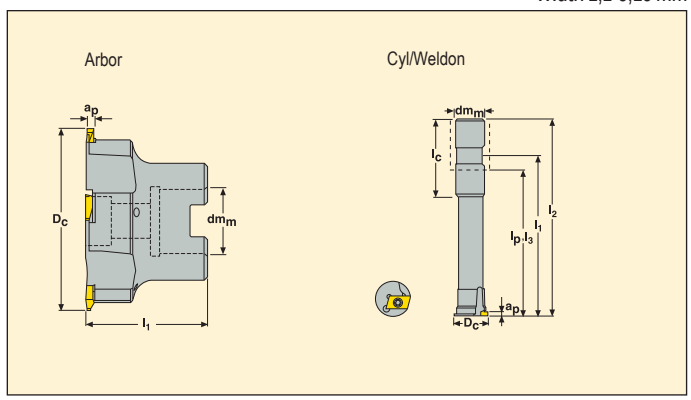

Part No.		Type of mounting	Dimensions in mm a_p	D_c	dm_m	l_1	l_2	l_3	l_p	l_c		KG		Insert
R335.15	-20024.3-03-1	Cyl.-Weldon	1,1/2,65	24	20	105,05	130	80	80	50	1	0,3	28200	R335.15-13..
	-25034.3-03-2	Cyl.-Weldon	1,1/2,65	34	25	98,05	130	74	74	56	2	0,5	23600	R335.15-13..
R335.15	-063-03.22-5	Arbor	1,1/2,65	63	22	40	–	–	–	–	5	0,5	17300	R335.15-13..
	-063-05.22-5	Arbor	3,15/5,15	63	22	40	–	–	–	–	5	0,4	17300	R335.15-18..

a_p depends on the insert width

For groove depth (a_r), please see insert pages 650-651

Spare Parts

For cutter	Insert screw	Insert key	Arbor screw
R335.15-20024	C03509-T15P	T15P-3	–
R335.15-25034	C03509-T15P	T15P-3	–
R335.15-063-..	C03509-T15P	T15P-3	220.17-692

Torque value 3.0 Nm. Torque keys, see page 690

Dimensions of mounting

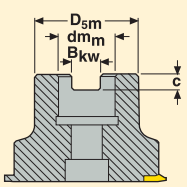

For cutter	Dimensions in mm D_{5m}	B_{kw}	c
R335.15-063-..	40	10,4	6,3

Please check availability in current price and stock-list

335.15 - Insert selection

SMG			f_z		
			10%	5%	2%
P1	R335.15-13..FG-E08 F40M	R335.15-18..FG-M12 F40M	0,19	0,26	0,40
P2	R335.15-13..FG-E08 F40M	R335.15-18..FG-M12 F40M	0,19	0,26	0,42
P3	R335.15-13..FG-E08 F40M	R335.15-18..FG-M12 F40M	0,18	0,24	0,40
P4	R335.15-13..FG-E08 F40M	R335.15-18..FG-M12 F40M	0,18	0,24	0,38
P5	R335.15-13..FG-E08 F40M	R335.15-18..FG-M12 F40M	0,17	0,24	0,38
P6	R335.15-13..FG-E08 F40M	R335.15-18..FG-M12 F40M	0,17	0,24	0,38
P7	R335.15-13..FG-E08 F40M	R335.15-18..FG-M12 F40M	0,17	0,24	0,38
P8	R335.15-13..FG-E08 F40M	R335.15-18..FG-M12 F40M	0,18	0,24	0,40
P11	R335.15-13..FG-E08 F40M	R335.15-18..FG-M12 F40M	0,17	0,24	0,38
M1	R335.15-13..FG-E08 F40M	R335.15-18..FG-M12 F40M	0,19	0,26	0,42
M2	R335.15-13..FG-E08 F40M	R335.15-18..FG-M12 F40M	0,17	0,24	0,38
M3	R335.15-13..FG-E08 F40M	R335.15-18..FG-M12 F40M	0,14	0,19	0,30
M4	R335.15-13..FG-E08 F40M	R335.15-18..FG-M12 F40M	0,12	0,17	0,26
M5	R335.15-13..FG-E08 F40M	R335.15-18..FG-M12 F40M	0,12	0,17	0,26
K1	R335.15-13..FG-E08 F40M	R335.15-18..FG-M12 F40M	0,19	0,26	0,42
K2	R335.15-13..FG-E08 F40M	R335.15-18..FG-M12 F40M	0,17	0,24	0,38
K3	R335.15-13..FG-E08 F40M	R335.15-18..FG-M12 F40M	0,17	0,24	0,38
K4	R335.15-13..FG-E08 F40M	R335.15-18..FG-M12 F40M	0,17	0,24	0,38
K5	R335.15-13..FG-E08 F40M	R335.15-18..FG-M12 F40M	0,16	0,22	0,34
K6	R335.15-13..FG-E08 F40M	R335.15-18..FG-M12 F40M	0,17	0,24	0,38
K7	R335.15-13..FG-E08 F40M	R335.15-18..FG-M12 F40M	0,16	0,22	0,34
N1	R335.15-13..FG-E08 F40M	R335.15-18..FG-M12 F40M	0,24	0,34	0,55
N2	R335.15-13..FG-E08 F40M	R335.15-18..FG-M12 F40M	0,24	0,34	0,55
N3	R335.15-13..FG-E08 F40M	R335.15-18..FG-M12 F40M	0,24	0,34	0,55
N11	R335.15-13..FG-E08 F40M	R335.15-18..FG-M12 F40M	0,24	0,34	0,55
S1	R335.15-13..FG-E08 F40M	R335.15-18..FG-M12 F40M	0,12	0,17	0,26
S2	R335.15-13..FG-E08 F40M	R335.15-18..FG-M12 F40M	0,12	0,17	0,26
S3	R335.15-13..FG-E08 F40M	R335.15-18..FG-M12 F40M	0,11	0,16	0,24
S11	R335.15-13..FG-E08 F40M	R335.15-18..FG-M12 F40M	0,14	0,19	0,30
S12	R335.15-13..FG-E08 F40M	R335.15-18..FG-M12 F40M	0,14	0,19	0,30
S13	R335.15-13..FG-E08 F40M	R335.15-18..FG-M12 F40M	0,12	0,17	0,26
H5	R335.15-13..FG-E08 F40M	R335.15-18..FG-M12 F40M	0,12	0,16	0,26
H8	R335.15-13..FG-E08 F40M	R335.15-18..FG-M12 F40M	0,090	0,12	0,20
H11	R335.15-13..FG-E08 F40M	R335.15-18..FG-M12 F40M	0,12	0,16	0,26
H12	R335.15-13..FG-E08 F40M	R335.15-18..FG-M12 F40M	0,12	0,16	0,26
H21	R335.15-13..FG-E08 F40M	R335.15-18..FG-M12 F40M	0,090	0,12	0,20

SMG = Seco material group
f_z = mm/tooth
v_c= m/min
a_r/D_c = %
All cutting data are start values

335.15 - Cutting data v_c = (m/min)

SMG	F40M		
	10%	5%	2%
P1	255	285	320
P2	250	275	305
P3	220	240	270
P4	190	215	240
P5	185	205	230
P6	210	230	255
P7	200	215	240
P8	185	205	225
P11	190	210	235
M1	200	220	250
M2	170	185	205
M3	135	150	165
M4	105	115	130
M5	85	95	105
K1	200	220	245
K2	175	195	215
K3	150	165	185
K4	145	155	175
K5	85	95	105
K6	125	135	155
K7	110	120	135
N1	740	800	890
N2	590	650	720
N3	395	430	480
N11	455	495	550
S1	49	55	60
S2	39	43	48
S3	34	37	42
S11	70	75	85
S12	48	50	60
S13	38	42	47
H5	41	45	50
H8	43	48	55
H11	50	55	65
H12	85	95	105
H21	43	48	55

Cutter 335.10 - Insert 150.10

Width 2,25 to 3,1 mm – full side

Type B_1 for Cylindrical/Weldon shank

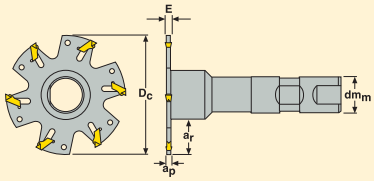

Type B_2 for stub Arbor

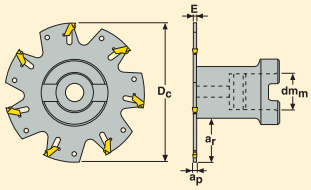

Type B_4 for Combimaster

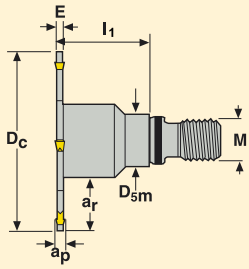

- For insert selection and cutting data recommendations, see page(s) 219-220
- For complete insert programme, see page(s) 644
- Spare parts, see page(s) 217-218

Drawings for type A and B_3, see page 216

Part No.	Type of mounting	Dimensions in mm a_p	D_c	a_r	dm_m	M	D_{5m}	E		KG		Insert 150.10
R335.10 -25063.3-02-5	B_1	2,25/2,5	63	15	25	–	–	1,9	5	0,6	4000	-2.25N/2.5N
-063-02.22-5	B_2	2,25/2,5	63	15	22	–	–	1,9	5	0,5	4000	-2.25N/2.5N
-1663.RE-02-5	B_4	2,25/2,5	63	16	–	16	30	1,9	5	0,3	4000	-2.25N/2.5N
R335.10 -32080.3-02-6	B_1	2,25/2,5	80	19,5	32	–	–	1,9	6	1,1	3500	-2.25N/2.5N
-080-02.22-6	B_2	2,25/2,5	80	19,5	22	–	–	1,9	6	0,5	3500	-2.25N/2.5N
335.10 -080-02.22-6	A	2,25/2,5	80	22,5	22	–	–	1,9	6	0,1	3500	-2.25N/2.5N
R335.10 -1680.RE-02-6	B_4	2,25/2,5	80	19,5	–	16	30	1,9	6	0,4	3500	-2.25N/2.5N
R335.10 -100-02.27-7	B_3	2,25/2,5	100	25,5	27	–	48	1,9	7	0,9	3200	-2.25N/2.5N
335.10 -100-02.27-7	A	2,25/2,5	100	29,0	27	–	–	1,9	7	0,1	3200	-2.25N/2.5N
R335.10 -125-02.32-9	B_3	2,5/2,25	125	33	32	–	58	1,9	9	1,1	2800	-2.25N/2.5N
335.10 -125-02.32-9	A	2,25/2,5	125	34,5	32	–	–	1,9	9	0,2	2800	-2.25N/2.5N
R335.10 -160-02.40-12	B_3	2,25/2,5	160	39,5	40	–	80	1,9	12	2,4	2400	-2.25N/2.5N
335.10 -160-02.40-12	A	2,25/2,5	160	39,5	40	–	–	1,9	12	0,3	2400	-2.25N/2.5N
R335.10 -25063.3-03-5	B_1	3,1/3,1	63	15	25	–	–	2,4	5	0,5	4000	-3N
-063-03.22-5	B_2	3,1/3,1	63	15	22	–	–	2,4	5	0,4	4000	-3N
-1663.RE-03-5	B_4	3,1/3,1	63	16	–	16	30	2,4	5	0,3	4000	-3N
R335.10 -32080.3-03-6	B_1	3,1/3,1	80	19,5	32	–	40	2,4	6	1,1	3500	-3N
-080-03.22-6	B_2	3,1/3,1	80	19,5	22	–	40	2,4	6	0,5	3500	-3N
335.10 -080-03.22-6	A	3,1/3,1	80	22,5	22	–	–	2,4	6	0,1	3500	-3N
R335.10 -1680.RE-03-6	B_4	3,1/3,1	80	19,5	–	16	30	2,4	6	0,5	3500	-3N
R335.10 -100-03.27-7	B_3	3,1/3,1	100	25,5	27	–	48	2,4	7	0,7	3200	-3N
335.10 -100-03.27-7	A	3,1/3,1	100	29,0	27	–	–	2,4	7	0,2	3200	-3N
R335.10 -125-03.32-9	B_3	3,1/3,1	125	33	32	–	58	2,4	9	1,4	2800	-3N
335.10 -125-03.32-9	A	3,1/3,1	125	34,5	32	–	–	2,4	9	0,3	2800	-3N
R335.10 -160-03.40-12	B_3	3,1/3,1	160	39,5	40	–	80	2,4	12	2,4	2400	-3N
335.10 -160-03.40-12	A	3,1/3,1	160	39,5	40	–	–	2,4	12	0,3	2400	-3N
335.10 -200-03.40-14	A	3,1/3,1	200	59,5	40	–	–	2,4	14	0,5	2200	-3N
-250-03.40-18	A	3,1/3,1	250	84,5	40	–	–	2,4	18	1,0	2000	-3N
-315-03.40-24	A	3,1/3,1	315	117,0	40	–	–	2,4	24	1,3	1700	-3N

Please check availability in current price and stock-list

For type A cutters, no drive holes for cutter dia 80-100 mm. For cutter dia > 100 mm, please use Seco drive rings,see page 217

Note: For B_1, B_2, B_3 and B_4 types, the blade is assembled on the holder in the delivery

Cutter 335.10 - Insert 150.10

Width 4,1 mm – full side

Type A for milling Arbor

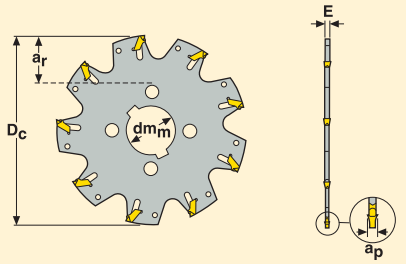

Type B_3 for stub Arbor

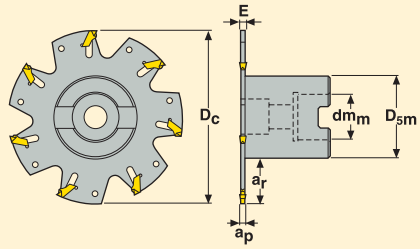

- For insert selection and cutting data recommendations, see page(s) 219-220
- For complete insert programme, see page(s) 644
- Spare parts, see page(s) 217-218

Drawings for Type B_1, B_2 and B_4, see page 215

Part No.	Type of mounting	Dimensions in mm a_p	D_c	a_r	dm_m	M	D_{5m}	E		KG		Insert 150.10
R335.10 -25063.3-04-5	B_1	4,1	63	15	25	–	–	3,4	5	0,5	4000	-4N
-063-04.22-5	B_2	4,1	63	15	22	–	–	3,4	5	0,4	4000	-4N
-1663.RE-04-5	B_4	4,1	63	16	–	16	30	3,4	5	0,3	4000	-4N
R335.10 -32080.3-04-6	B_1	4,1	80	19,5	32	–	–	3,4	6	1,1	3500	-4N
-080-04.22-6	B_2	4,1	80	19,5	22	–	–	3,4	6	0,5	3500	-4N
335.10 -080-04.22-6	A	4,1	80	22,5	22	–	–	3,4	6	0,1	3500	-4N
R335.10 -1680.RE-04-6	B_4	4,1	80	19,5	–	16	30	3,4	6	0,5	3500	-4N
R335.10 -100-04.27-7	B_3	4,1	100	25,5	27	–	48	3,4	7	0,7	3200	-4N
335.10 -100-04.27-7	A	4,1	100	29,0	27	–	–	3,4	7	0,2	3200	-4N
R335.10 -125-04.32-9	B_3	4,1	125	33	32	–	58	3,4	9	1,3	2800	-4N
335.10 -125-04.32-9	A	4,1	125	34,5	32	–	–	3,4	9	0,4	2800	-4N
R335.10 -160-04.40-12	B_3	4,1	160	39,5	40	–	80	3,4	12	2,5	2400	-4N
335.10 -160-04.40-12	A	4,1	160	39,5	40	–	–	3,4	12	0,5	2400	-4N
335.10 -200-04.40-14	A	4,1	200	59,5	40	–	–	3,4	14	0,9	2200	-4N
335.10 -250-04.40-18	A	4,1	250	84,5	40	–	–	3,4	18	1,2	2000	-4N
335.10 -315-04.40-24	A	4,1	315	117,0	40	–	–	3,4	24	1,9	1700	-4N

Please check availability in current price and stock-list

For type A cutters, no drive holes for cutter dia 80-100 mm. For cutter dia > 100 mm, please use Seco drive rings,see page 217
Note: For B_1, B_2, B_3 and B_4 types, the blade is assembled on the holder in the delivery

Disc milling cutters 335.10 – Spare parts

Holder for B_1

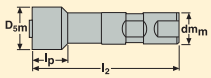

Part No.	dm_m	D_{5m}	l_2	lp
335.10-25.3	25	32	106	25
335.10-32.3	32	40	150	30

Holder for B_2

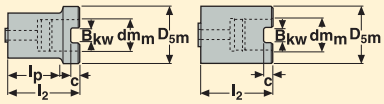

Part No.	dm_m	D_{5m}	l_2	lp	B_{kw}	c
335.10-2232	22	40	50	36	10,4	6,3
335.10-2240	22	40	50	–	10,4	6,3

Holder for B_3

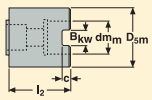

Part No.	dm_m	D_{5m}	l_2	B_{kw}	c
335.10-2748	27	48	50	12,4	7
335.10-3258	32	58	63	14,4	8
335.10-4080	40	80	63	16,4	9

Note: assembly screws delivered with holder B1, B2 B3 and B4

Holder for B_4

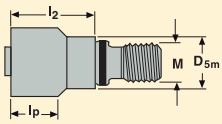

Part No.	lp	M	D_{5m}	l_2	
335.10-16RE-10	28	M16	30	30	
335.10-16RE-18	28	M16	30	40	

Drive rings for type A

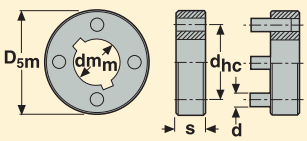

Part No.	dm_m	D_{5m}	s	d_{hc}	d
335.10-14532	32	55	10	45	5,7
335.10-16340	40	80	12	63	10,7

Drive ring to be ordered separately

Dimension of mounting for type A

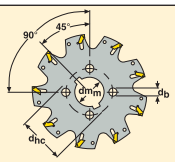

Part No.	dm_m	d_{hc}	d_b		
335.10-080	22	–	–		
335.10-100	27	–	–		
335.10-125	32	45	6		
335.10-160-315	40	63	11		

Spare parts

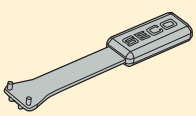

For cutter	Insert removal key			
R335.10-..	150.10-150			

Please check availability in current price and stock-list.

Assembly components/Standard parts for type B_1

Part No.	Standard parts: Cutter body Part No.	Standard parts: Holder Part no.
R335.10-25063.3-02-5	B-R335.10-063.10-02	335.10-25.3
R335.10-32080.3-02-6	B-R335.10-080.18-02	335.10-32.3
R335.10-25063.3-03-5	B-R335.10-063.10-03	335.10-25.3
R335.10-32080.3-03-6	B-R335.10-080.18-03	335.10-32.3
R335.10-25063.3-04-5	B-R335.10-063.10-04	335.10-25.3
R335.10-32080.3-04-6	B-R335.10-080.18-04	335.10-32.3

Spare parts

Assembly screw	Key/Torque value	
3 x 335.10-0516-T15P	T15P-3 / 6,5 Nm	

Key to be ordered separately

Assembly components/Standard parts for type B_2

Part No.	Standard parts: Cutter body Part No.	Standard parts: Holder Part no.
R335.10-063-02.22-5	B-R335.10-063.10-02	335.10-2232
R335.10-080-02.22-6	B-R335.10-080.18-02	335.10-2240
R335.10-063-03.22-5	B-R335.10-063.10-03	335.10-2232
R335.10-080-03.22-6	B-R335.10-080.18-03	335.10-2240
R335.10-063-04.22-5	B-R335.10-063.10-04	335.10-2232
R335.10-080-04.22-6	B-R335.10-080.18-04	335.10-2240

Spare parts

Assembly screw	Key/Torque value	Arbor screw
3 x 335.10-0516-T15P	T15P-3 / 6,5 Nm	220.17-696

Key to be ordered separately

Assembly components/Standard parts for type B_3

Part No.	Standard parts: Cutter body Part No.	Standard parts: Holder Part no.
R335.10-100-02.27-7	B-R335.10-100.27-02	335.10-2748
R335.10-100-03.27-7	B-R335.10-100.27-03	335.10-2748
R335.10-100-04.27-7	B-R335.10-100.27-04	335.10-2748
R335.10-125-02.32-9	B-R335.10-125.32-02	335.10-3258
R335.10-125-03.32-9	B-R335.10-125.32-03	335.10-3258
R335.10-125-04.32-9	B-R335.10-125.32-04	335.10-3258
R335.10-160-02.40-12	B-R335.10-160.40-02	335.10-4080
R335.10-160-03.40-12	B-R335.10-160.40-03	335.10-4080
R335.10-160-04.40-12	B-R335.10-160.40-04	335.10-4080

Spare parts

Assembly screw	Key/Torque value	Arbor screw
4 x 335.10-0516-T15P	T15P-3 / 6,5 Nm	MC6S 12x40
		220.17-694
4 x 335.10-1030-T30P	T30P-4 / 8 Nm	MC6S 20x40

Key to be ordered separately

Assembly components/Standard parts for type B_4/Combimaster

Part No.	Standard parts: Cutter body Part No.	Standard parts: Holder Part no.
R335.10-1663.RE-02-5	B-R335.10-063.10-02	335.10-16RE-10
R335.10-1680.RE-02-6	B-R335.10-080.18-02	335.10-16RE-18
R335.10-1663.RE-03-5	B-R335.10-063.10-03	335.10-16RE-10
R335.10-1680.RE-03-6	B-R335.10-080.18-03	335.10-16RE-18
R335.10-1663.RE-04-5	B-R335.10-063.10-04	335.10-16RE-10
R335.10-1680.RE-04-6	B-R335.10-080.18-04	335.10-16RE-18

Spare parts

Assembly screw	Key/Torque value	
3 x 335.10-0516-T15P	T15P-3 / 6,5 Nm	

Key to be ordered separately

335.10 - Insert selection

SMG					f_z		
					30%	20%	10%
P1	150.10-2.25N-14 CP600	150.10-2.5N-14 CP600	150.10-3N-14 CP600	150.10-4N-14 CP600	0,090	0,11	0,14
P2	150.10-2.25N-14 CP600	150.10-2.5N-14 CP600	150.10-3N-14 CP600	150.10-4N-14 CP600	0,095	0,11	0,14
P3	150.10-2.25N-14 CP600	150.10-2.5N-14 CP600	150.10-3N-14 CP600	150.10-4N-14 CP600	0,090	0,10	0,14
P4	150.10-2.25N-14 CP600	150.10-2.5N-14 CP600	150.10-3N-14 CP600	150.10-4N-14 CP600	0,085	0,10	0,13
P5	150.10-2.25N-14 CP600	150.10-2.5N-14 CP600	150.10-3N-14 CP600	150.10-4N-14 CP600	0,085	0,10	0,13
P6	150.10-2.25N-14 CP600	150.10-2.5N-14 CP600	150.10-3N-14 CP600	150.10-4N-14 CP600	0,085	0,095	0,13
P7	150.10-2.25N-14 CP500	150.10-2.5N-14 CP500	150.10-3N-14 CP500	150.10-4N-14 CP500	0,085	0,095	0,13
P8	150.10-2.25N-14 CP500	150.10-2.5N-14 CP500	150.10-3N-14 CP500	150.10-4N-14 CP500	0,090	0,10	0,14
P11	150.10-2.25N-14 CP600	150.10-2.5N-14 CP600	150.10-3N-14 CP600	150.10-4N-14 CP600	0,085	0,095	0,13
M1	150.10-2.25N-14 CP600	150.10-2.5N-14 CP600	150.10-3N-14 CP600	150.10-4N-14 CP600	0,095	0,11	0,14
M2	150.10-2.25N-14 CP600	150.10-2.5N-14 CP600	150.10-3N-14 CP600	150.10-4N-14 CP600	0,085	0,10	0,13
M3	150.10-2.25N-14 CP600	150.10-2.5N-14 CP600	150.10-3N-14 CP600	150.10-4N-14 CP600	0,070	0,080	0,10
M4	150.10-2.25N-14 CP600	150.10-2.5N-14 CP600	150.10-3N-14 CP600	150.10-4N-14 CP600	0,060	0,070	0,090
M5	150.10-2.25N-14 CP600	150.10-2.5N-14 CP600	150.10-3N-14 CP600	150.10-4N-14 CP600	0,060	0,070	0,090
K1	150.10-2.25N-14 TGP45	150.10-2.5N-14 TGP45	150.10-3N-14 TGP45	150.10-4N-14 TGP45	0,095	0,11	0,14
K2	150.10-2.25N-14 TGP45	150.10-2.5N-14 TGP45	150.10-3N-14 TGP45	150.10-4N-14 TGP45	0,085	0,10	0,13
K3	150.10-2.25N-14 TGP45	150.10-2.5N-14 TGP45	150.10-3N-14 TGP45	150.10-4N-14 TGP45	0,085	0,10	0,13
K4	150.10-2.25N-14 TGP45	150.10-2.5N-14 TGP45	150.10-3N-14 TGP45	150.10-4N-14 TGP45	0,085	0,10	0,13
K5	150.10-2.25N-14 TGP45	150.10-2.5N-14 TGP45	150.10-3N-14 TGP45	150.10-4N-14 TGP45	0,075	0,090	0,12
K6	150.10-2.25N-14 TGP45	150.10-2.5N-14 TGP45	150.10-3N-14 TGP45	150.10-4N-14 TGP45	0,085	0,10	0,13
K7	150.10-2.25N-14 TGP45	150.10-2.5N-14 TGP45	150.10-3N-14 TGP45	150.10-4N-14 TGP45	0,075	0,090	0,12
N1	150.10-2.25N-14 CP500	150.10-2.5N-12 CP500	150.10-3N-12 CP500	150.10-4N-12 CP500	0,12	0,14	0,18
N2	150.10-2.25N-14 CP500	150.10-2.5N-12 CP500	150.10-3N-12 CP500	150.10-4N-12 CP500	0,12	0,14	0,18
N3	150.10-2.25N-14 CP500	150.10-2.5N-12 CP500	150.10-3N-12 CP500	150.10-4N-12 CP500	0,12	0,14	0,18
N11	150.10-2.25N-14 CP500	150.10-2.5N-12 CP500	150.10-3N-12 CP500	150.10-4N-12 CP500	0,12	0,14	0,18
S1	150.10-2.25N-14 CP600	150.10-2.5N-14 CP600	150.10-3N-14 CP600	150.10-4N-14 CP600	0,060	0,070	0,090
S2	150.10-2.25N-14 CP600	150.10-2.5N-14 CP600	150.10-3N-14 CP600	150.10-4N-14 CP600	0,060	0,070	0,090
S3	150.10-2.25N-14 CP600	150.10-2.5N-14 CP600	150.10-3N-14 CP600	150.10-4N-14 CP600	0,055	0,065	0,085
S11	150.10-2.25N-14 CP600	150.10-2.5N-14 CP600	150.10-3N-14 CP600	150.10-4N-14 CP600	0,070	0,080	0,10
S12	150.10-2.25N-14 CP600	150.10-2.5N-14 CP600	150.10-3N-14 CP600	150.10-4N-14 CP600	0,070	0,080	0,10
S13	150.10-2.25N-14 CP600	150.10-2.5N-14 CP600	150.10-3N-14 CP600	150.10-4N-14 CP600	0,060	0,070	0,090
H5	150.10-2.25N-14 TGP45	150.10-2.5N-14 TGP45	150.10-3N-14 TGP45	150.10-4N-14 TGP45	0,060	0,065	0,090
H8	150.10-2.25N-14 TGP45	150.10-2.5N-14 TGP45	150.10-3N-14 TGP45	150.10-4N-14 TGP45	0,044	0,050	0,070
H11	150.10-2.25N-14 TGP45	150.10-2.5N-14 TGP45	150.10-3N-14 TGP45	150.10-4N-14 TGP45	0,060	0,065	0,090
H12	150.10-2.25N-14 TGP45	150.10-2.5N-14 TGP45	150.10-3N-14 TGP45	150.10-4N-14 TGP45	0,060	0,065	0,090
H21	150.10-2.25N-14 TGP45	150.10-2.5N-14 TGP45	150.10-3N-14 TGP45	150.10-4N-14 TGP45	0,044	0,050	0,070

SMG = Seco material group
f_z = mm/tooth
v_c= m/min
a_r/D_c = %
All cutting data are start values

335.10 - Cutting data v_c = (m/min)

	TGP45			T350M			CP500			CP600		
SMG	30%	20%	10%	30%	20%	10%	30%	20%	10%	30%	20%	10%
P1	255	275	300	220	235	260	240	260	285	195	205	230
P2	245	265	295	215	230	255	230	250	275	185	200	220
P3	215	230	255	185	195	220	205	215	240	165	175	195
P4	190	205	225	165	175	195	180	195	215	145	155	170
P5	185	195	220	160	170	190	175	185	205	140	150	165
P6	205	220	245	180	190	210	195	210	230	155	165	185
P7	195	210	230	170	180	200	185	195	220	150	155	175
P8	180	190	215	155	165	185	170	180	205	135	145	165
P11	190	200	225	165	175	195	180	190	210	145	155	170
M1	175	190	210	165	175	195	175	190	205	150	160	180
M2	150	160	175	135	145	160	145	155	170	125	135	150
M3	120	130	140	110	120	130	115	125	135	100	110	120
M4	90	100	110	85	90	100	90	95	105	80	85	90
M5	75	80	90	70	75	85	75	80	90	65	70	75
K1	195	210	230	170	180	200	185	200	220	145	160	175
K2	175	185	205	150	160	180	165	175	195	135	140	155
K3	150	155	175	130	135	150	140	150	165	110	120	135
K4	140	150	165	120	130	145	135	140	160	105	115	125
K5	85	90	100	75	80	85	80	85	95	65	70	75
K6	125	130	145	110	115	125	120	125	140	95	100	110
K7	110	115	130	95	100	110	105	110	120	85	90	100
N1	720	780	860	—	—	—	690	740	820	550	590	650
N2	580	630	700	—	—	—	550	600	660	445	475	530
N3	390	420	465	—	—	—	370	395	440	295	320	350
N11	445	480	530	—	—	—	420	455	500	335	365	400
S1	45	48	55	39	42	47	42	45	50	36	39	43
S2	36	38	43	32	34	38	34	36	40	29	31	35
S3	31	34	37	28	30	33	30	32	35	26	27	30
S11	65	65	75	55	60	65	60	65	70	50	55	60
S12	44	47	50	39	42	46	41	45	49	36	38	42
S13	35	37	41	31	33	37	33	35	39	28	30	34
H5	37	39	43	35	37	41	36	38	42	31	32	36
H8	38	41	46	37	39	43	38	40	44	32	34	38
H11	47	50	55	45	47	50	46	49	55	39	42	46
H12	75	80	90	70	75	85	75	80	85	65	65	75
H21	38	41	46	37	39	43	38	40	44	32	34	38

Cutter 335.19 - Insert SNHQ

Width 4 mm - full side

Combimaster (RE)

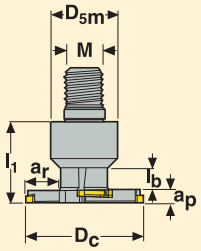

Cylindrical (Cyl)

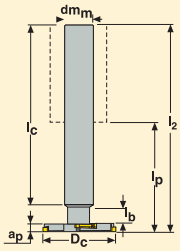

Type B for stub Arbor (B)

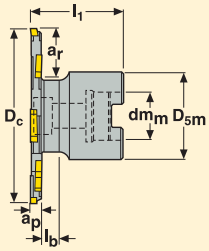

Type A for milling Arbor (A)

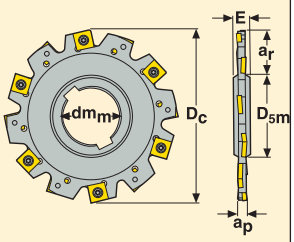

- For insert selection and cutting data recommendations, see page(s) 228-231
- For complete insert programme, see page(s) 626, 648
- For spare parts and technical information, see page(s) 226-227

Part No.	Type of mounting	Dimensions in mm												Z$_c$*	KG		() = No of inserts	
		a$_p$	D$_c$	a$_r$	dm$_m$	D$_{5m}$	M	l$_1$	l$_2$	l$_b$	l$_p$	l$_c$					SNHQ	SNHQ
R335.19 -1040.RE-04.2	RE	4	40	11,6	–	18,5	M10	23	–	8,3	–	–	4	2	0,1	17100	1102..R(2)	1102..L(2)
R335.19 -2550.0-04.2	Cyl	4	50	13,9	25	–	–	–	150	11	94	132,2	4	2	0,6	19100	1102..R(2)	1102..L(2)
-1650.RE-04.2	RE	4	50	13,9	–	30	M16	35	–	11	–	–	4	2	0,2	19100	1102..R(2)	1102..L(2)
R335.19 -3263.0-04.4	Cyl	4	63	13,9	32	–	–	–	170	–	110	148,6	8	4	1,2	17100	1102..R(4)	1102..L(4)
-063.04.16-4	B	4	63	13,9	16	33	–	35	–	–	–	–	8	4	0,3	17100	1102..R(4)	1102..L(4)
-063.04.22-3	B	4	63	13,9	22	40	–	50	–	11,3	–	–	6	3	0,4	17100	1102..R(3)	1102..L(3)
-1663.RE-04.4	RE	4	63	13,9	–	33	M16	35	–	–	–	–	8	4	0,4	17100	1102..R(4)	1102..L(4)
335.19 -063.04.22-4	A	4	63	13,6	22	33	–	–	–	–	–	–	8	4	0,1	17100	1102..R(4)	1102..L(4)
R335.19 -080.04.22-4	B	4	80	22,4	22	40	–	50	–	11,3	–	–	8	4	0,4	15200	1102..R(4)	1102..L(4)
-080.04.22-5	B	4	80	22,4	22	40	–	50	–	11,3	–	–	10	5	0,5	15200	1102..R(5)	1102..L(5)
335.19 -080.04.22-5	A	4	80	18,6	22	33	–	–	–	–	–	–	10	5	0,2	15200	1102..R(5)	1102..L(5)
R335.19 -100.04.27-6	B	4	100	22,1	27	48	–	50	–	–	–	–	12	6	0,7	13500	1102..R(6)	1102..L(6)
335.19 -100.04.27-6	A	4	100	24,6	27	41	–	–	–	–	–	–	12	6	0,3	13500	1102..R(6)	1102..L(6)
R335.19 -125.04.32-7	B	4	125	29,6	32	58	–	50	–	–	–	–	14	7	1,1	12200	1102..R(7)	1102..L(7)
335.19 -125.04.40-7	A	4	125	30,1	40	55	–	–	–	–	–	–	14	7	0,4	12200	1102..R(7)	1102..L(7)
R335.19 -160.04.40-9	B	4	160	41,1	40	70	–	50	–	–	–	–	18	9	1,2	10700	1102..R(9)	1102..L(9)
335.19 -160.04.40-9	A	4	160	42,6	40	65	–	–	–	–	–	–	18	9	0,6	10700	1102..R(9)	1102..L(9)

Please check availability in current price and stock-list

*Effective number of teeth

Cutter 335.19 - Insert SNHQ

Width 5 mm - full side

Combimaster (RE)

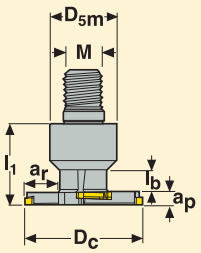

Cylindrical (Cyl)

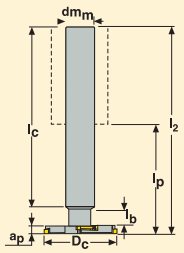

Type B for stub Arbor (B)

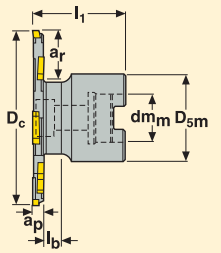

Type A for milling Arbor (A)

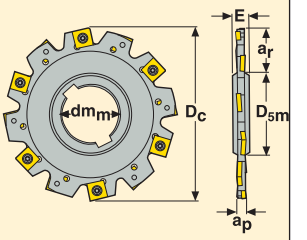

- For insert selection and cutting data recommendations, see page(s) 228-231
- For complete insert programme, see page(s) 626, 648
- For spare parts and technical information, see page(s) 226-227

Part No.	Type of mounting	Dimensions in mm															() = No of inserts	
		a_p	D_c	a_r	dm_m	D_{5m}	M	l_1	l_2	l_b	l_p	l_c		Z_c*	KG		SNHQ	SNHQ
R335.19 -1040.RE-05.2	RE	5	40	11,6	–	18,5	M10	23	–	7,3	–	–	4	2	0,1	16800	1103..R(2)	1103..L(2)
R335.19 -2550.0-05.2	Cyl	5	50	13,9	25	–	–	–	150	10	94	132,2	4	2	0,6	16800	1103..R(2)	1103..L(2)
-1650.RE-05.2	B	5	50	13,9	–	30	M16	35	–	10	–	–	4	2	0,3	16800	1103..R(2)	1103..L(2)
R335.19 -063.05.16-4	B	5	63	13,9	16	33	–	35	–	–	–	–	8	4	0,3	14900	1103..R(4)	1103..L(4)
-063.05.22-3	B	5	63	13,9	22	40	–	50	–	10,3	–	–	6	3	0,4	14900	1103..R(3)	1103..L(3)
-1663.RE-05.4	RE	5	63	13,9	–	33	M16	35	–	–	–	–	8	4	0,3	14900	1103..R(4)	1103..L(4)
335.19 -063.05.22-4	A	5	63	13,6	22	33	–	–	–	–	–	–	8	4	0,1	14900	1103..R(4)	1103..L(4)
R335.19 -3280.0-05.5	Cyl	5	80	22,5	32	–	–	–	170	–	110	148,6	10	5	1,2	13200	1102..R(5)	1102..L(5)
-080.05.22-5	B	5	80	22,4	22	40	–	50	–	10,3	–	–	10	5	0,5	13200	1103..R(5)	1103..L(5)
-080.05.22-4	B	5	80	22,4	22	40	–	50	–	10,3	–	–	8	4	0,5	13200	1103..R(4)	1103..L(4)
335.19 -080.05.22-5	A	5	80	19,6	22	33	–	–	–	–	–	–	10	5	0,2	13200	1103..R(5)	1103..L(5)
R335.19 -100.05.27-6	B	5	100	22,1	27	48	–	50	–	–	–	–	12	6	0,7	11800	1103..R(6)	1103..L(6)
335.19 -100.05.27-6	A	5	100	25,6	27	41	–	–	–	–	–	–	12	6	0,3	11800	1103..R(6)	1103..L(6)
335.19 -125.05.40-7	A	5	125	31,1	40	55	–	–	–	–	–	–	14	7	0,4	10700	1103..R(7)	1103..R(7)
R335.19 -125.05.32-7	B	5	125	29,6	32	58	–	50	–	–	–	–	14	7	1,1	10700	1103..R(7)	1103..L(7)
335.19 -160.05.40-9	A	5	160	43,6	40	65	–	–	–	–	–	–	18	9	0,7	9300	1103..R(9)	1103..L(9)
R335.19 -160.05.40-9	B	5	160	41,1	40	70	–	50	–	–	–	–	18	9	1,3	9300	1103..R(9)	1103..L(9)

Please check availability in current price and stock-list

*Effective number of teeth

Cutter 335.19 - Insert SNHQ

Width 6 mm - full side

Combimaster (RE)

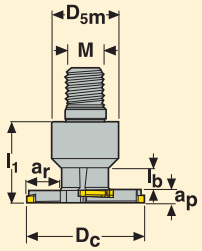

Cylindrical (Cyl)

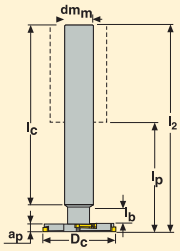

Type B for stub Arbor (B)

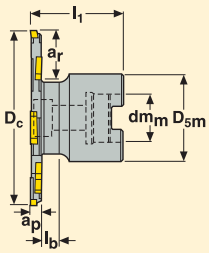

Type A for milling Arbor (A)

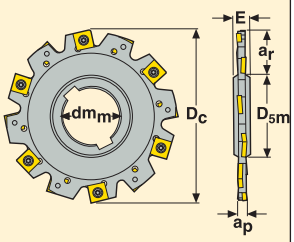

- For insert selection and cutting data recommendations, see page(s) 228-231
- For complete insert programme, see page(s) 627, 648
- For spare parts and technical information, see page(s) 226-227

Part No.		Type of mounting	Dimensions in mm																() = No of inserts	
			a_p	D_c	a_r	dm_m	D_{5m}	M	l_1	l_2	l_b	l_p	l_c		Z_c*	KG			SNHQ	SNHQ
R335.19	-1650.RE-06.2	RE	6	50	13,9	–	30	M16	35	–	9	–	–	4	2	0,3	12300		1203..R(3)	1203..L(3)
	-2550.0-06.2	Cyl	6	50	13,9	25	–	–	–	150	9	94	132,2	4	2	0,6	12300		1203..R(2)	1203..L(2)
R335.19	-3263.0-06.3	Cyl	6	63	14	32	–	–	–	170	–	110	148,6	6	3	1,2	10900		1203..R(3)	1203..L(3)
	-1663.RE-06.3	RE	6	63	13,9	–	33	M16	35	–	–	–	–	6	3	0,3	10900		1203..R(3)	1203..L(3)
	-063.06.16-3	B	6	63	13,9	16	33	–	35	–	–	–	–	6	3	0,3	10900		1203..R(3)	1203..L(3)
	-063.06.22-3	B	6	63	13,9	22	40	–	50	–	9,3	–	–	6	3	0,5	10900		1203..R(3)	1203..L(3)
335.19	-063.06.22-3	A	6	63	13,6	22	33	–	–	–	–	–	–	6	3	0,1	10900		1203..R(3)	1203..L(3)
R335.19	-3280.0-06.4	Cyl	6	80	22,5	32	–	–	–	170	–	110	148,6	8	4	1,2	9700		1203..R(4)	1203..L(4)
	-080.06.22-4	B	6	80	22,4	22	40	–	50	–	9,3	–	–	8	4	0,5	9700		1203..R(4)	1203..L(4)
335.19	-080.06.22-4	A	6	80	19,6	22	33	–	–	–	–	–	–	8	4	0,2	9700		1203..R(4)	1203..L(4)
R335.19	-100.06.27-5	B	6	100	22,0	27	48	–	50	–	–	–	–	10	5	0,8	8700		1203..R(5)	1203..L(5)
335.19	-100.06.27-5	A	6	100	25,6	27	41	–	–	–	–	–	–	10	5	0,3	8700		1203..R(5)	1203..L(5)
R335.19	-125.06.32-6	B	6	125	29,0	32	58	–	50	–	–	–	–	12	6	1,1	7700		1203..R(6)	1203..L(6)
335.19	-125.06.40-6	A	6	125	31,1	40	55	–	–	–	–	–	–	12	6	0,5	7700		1203..R(6)	1203..L(6)
R335.19	-160.06.40-8	B	6	160	41,1	40	70	–	50	–	–	–	–	16	8	1,4	6800		1203..R(8)	1203..L(8)
335.19	-160.06.40-8	A	6	160	43,6	40	65	–	–	–	–	–	–	16	8	0,8	6800		1203..R(8)	1203..L(8)
335.19	-200.06.50-9	A	6	200	61,6	50	69	–	–	–	–	–	–	18	9	1,4	6300		1203..R(9)	1203..L(9)
335.19	-250.06.50-12	A	6	250	86,6	50	69	–	–	–	–	–	–	24	12	1,9	5600		1203..R(12)	1203..L(12)

Please check availability in current price and stock-list

*Effective number of teeth

Cutter 335.19 - Insert SNHQ

Width 7-10 mm - full side

Type B for stub arbor (B)

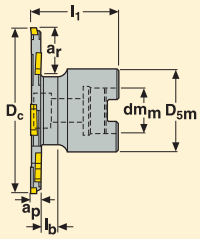

Type A for milling arbor (A)

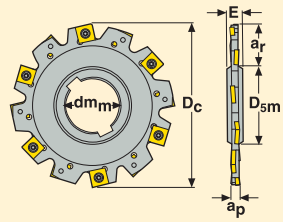

- For insert selection and cutting data recommendations, see page(s) 228-231
- For complete insert programme, see page(s) 627-629,648
- For spare parts and technical information, see page(s) 226-227

Part No.	Type of mounting	Dimensions in mm a_p	D_c	a_r	dm_m	D_{5m}	l_1	l_b		Z_c*	KG		() = No of inserts SNHQ	SNHQ
R335.19 -063.07.16-3	B	**7/8	63	13,8	16	33	35/35.5	–	6	3	0,3	9400	1204/12045..R(3)	1204/12045..L(3)
-063.07.22-3	B	**7/8	63	13,8	22	40	50/50.5	8,3	6	3	0,4	9400	1204/12045..R(3)	1204/12045..L(3)
R335.19 -080.07.22-4	B	**7/8	80	22,0	22	40	50/50.5	8,3	8	4	0,5	8400	1204/12045..R(4)	1204/12045..L(4)
335.19 -080.07.22-4	A	**7/8	80	20,6	22	33	–	–	8	4	0,2	8400	1204/12045..R(4)	1204/12045..L(4)
R335.19 -100.07.27-5	B	**7/8	100	22	27	48	50/50.5	–	10	5	0,9	7500	1204/12045..R(5)	1204/12045..R(5)
335.19 -100.07.27-5	A	**7/8	100	26,6	27	41	–	–	10	5	0,3	7500	1204/12045..R(5)	1204/12045..R(5)
R335.19 -125.07.32-6	B	**7/8	125	29,5	32	58	50/50.5	–	12	6	1,2	6700	1204/12045..R(6)	1204/12045..L(6)
335.19 -125.07.40-6	A	**7/8	125	32,1	40	55	–	–	12	6	0,5	6700	1204/12045..R(6)	1204/12045..L(6)
R335.19 -160.07.40-8	B	**7/8	160	41,1	40	70	50/50.5	–	16	8	1,5	5900	1204/12045..R(8)	1204/12045..L(8)
335.19 -160.07.40-8	A	**7/8	160	44,6	40	65	–	–	16	8	0,9	5900	1204/12045..R(8)	1204/12045..L(8)
335.19 -200.07.50-9	A	**7/8	200	62,6	50	69	–	–	18	9	1,4	5200	1204/12045..R(9)	1204/12045..L(9)
335.19 -250.07.50-12	A	**7/8	250	87,6	50	69	–	–	24	12	2,1	4700	1204/12045..R(12)	1204/12045..L(12)
R335.19 -100.10.27-5	B	10	100	22	27	48	–	–	10	5	0,9	6600	1205..R(5)	1205..L(5)
335.19 -100.10.27-5	A	10	100	27,6	27	41	–	–	10	5	0,4	6600	1205..R(5)	1205..L(5)
R335.19 -125.10.32-6	B	10	125	29,5	32	58	–	–	12	6	1,3	6000	1205..R(6)	1205..L(6)
335.19 -125.10.40-6	A	10	125	33,1	40	55	–	–	12	6	0,6	6000	1205..R(6)	1205..L(6)
R335.19 -160.10.40-8	B	10	160	41,1	40	70	–	–	16	8	1,8	5200	1205..R(8)	1205..L(8)
335.19 -160.10.40-8	A	10	160	46,2	40	65	–	–	16	8	1,2	5200	1205..R(8)	1205..L(8)
335.19 -200.10.50-9	A	10	200	63,6	50	69	–	–	18	9	1,9	4700	1205..R(9)	1205..L(9)
335.19 -250.10.50-12	A	10	250	88,6	50	69	–	–	24	12	3,0	4200	1205..R(12)	1205..L(12)

Please check availability in current price and stock-list

*Effective number of teeth

** For a_p = 7 mm use insert SNHQ 1204..., l1= 50 mm and 35 mm.
For a_p =8 mm use insert SNHQ 12045..., l1= 50,5 mm and 35,5 mm

Cutter 335.19 - Insert SNHQ

Width 12 mm - full side

Type B for stub arbor (B)

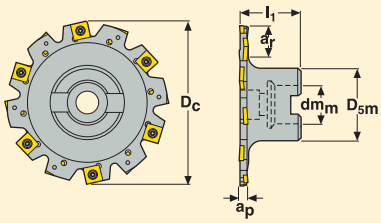

Type A for milling arbor (A)

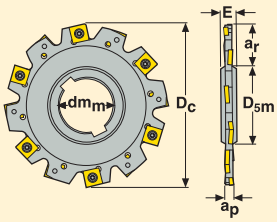

- For insert selection and cutting data recommendations, see page(s) 228-231
- For complete insert programme, see page(s) 630, 648
- For spare parts and technical information, see page(s) 226-227

Part No.	Type of mounting	Dimensions in mm										() = No of inserts	
		a_p	D_c	a_r	dm_m	D_{5m}	l_1		Z_c*	KG		SNHQ	SNHQ
R335.19 -100.12.27-5	B	12	100	22	27	48	50	10	5	0,9	6000	1207..R(5)	1207..L(5)
335.19 -100.12.27-5	A	12	100	27,9	27	41	–	10	5	0,5	6000	1207..R(5)	1207..L(5)
R335.19 -125.12.32-6	B	12	125	29,5	32	58	50	12	6	1,5	5300	1207..R(6)	1207..L(6)
R335.19 -160.12.40-8	B	12	160	41,1	40	70	50	16	8	1,9	4700	1207..R(8)	1207..L(8)
335.19 -160.12.40-8	A	12	160	45,9	40	65	–	16	8	1,3	4700	1207..R(8)	1207..L(8)
335.19 -200.12.50-9	A	12	200	64,2	50	69	–	18	9	2,2	4200	1207..R(9)	1207..L(9)
335.19 -250.12.50-11	A	12	250	89,2	50	69	–	22	11	3,7	3700	1207..R(11)	1207..L(11)

Please check availability in current price and stock-list

*Effective number of teeth

For shanks and dimensons, see page

Locking screw/Key

For a_p	Assembly screw	Key	Torque value Nm
4	C93504-T09P	T09P-3	2,0
5	C93505-T09P	T09P-3	2,0
6	C94005-T15P	T15P-3	3,5
7/8	C94006-T15P	T15P-3	3,5
10	C94008-T15P	T15P-3	3,5
12	C94010-T15P	T15P-3	3,5

Dimensions of mounting and arbor screw for Type B

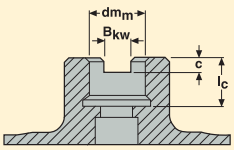

For cutter	Dimension in mm				Assembly screw
	dm_m	B_{kw}	c	l_c	
R335.19-063	16	8,4	5,6	18	TCEI0825
R335.19-063	22	10,4	6,3	20	MC6S 10x40
R335.19-080	22	10,4	6,3	20	MC6S 10x40
R335.19-100	27	12,4	7	22	MC6S 12x35
R335.19-125	32	14,4	8	25	220.17-694
R335.19-125	40	16,4	9	30	–
R335.19-160	40	16,4	9	30	–

Dimensions of mounting – Keyway for Type A

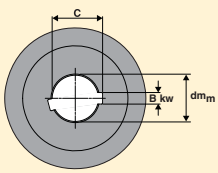

Dimension in mm			
dm_m	B_{kw}	c	
22	6	24,15	
27	7	29,9	
40	10	43,6	
50	12	53,6	

Disc milling cutter 335.19 – Technical information

Cutter side

LH = Left hand insert
RH = Right hand insert

SNHQ insert choice: Width of cut and corner radius choice

Inserts	a_p	R 0,2	R 0,4	R 0,8	R1,0	R 1,2	R 1,6	R 2,0	R 2,4	R 3,0	R 3,1	R 3,5	R 4,0	R 5,0	R 6,0
SNHQ 1102	4	■	■	■		■	■	■							
SNHQ 1103	5	■	■	■		■	■	■							
SNHQ 1203	6	■	■	■	■	■	■	■	x	o					
SNHQ 1204	7	■	■	■		■	■	■	x		x	o			
SNHQ 12045	8	■	■	■		■	■	■	x		x		o		
SNHQ 1205	10	■	■	■	■	■	■	■	x		x		x	o	
SNHQ 1207	12	■	■	■		■	■	■	x		x		x	x	o

■ = SNHQ 4 edges
x= SNHQ 2 edges
o= Full radius possibillities

SNHQ - Insert selection

SMG		f_z		
		30%	20%	10%
P1	SNHQ...-M07 F40M	0,12	0,14	0,19
P2	SNHQ...-M07 F40M	0,13	0,14	0,19
P3	SNHQ...-M07 F40M	0,12	0,14	0,18
P4	SNHQ...-M07 F40M	0,12	0,13	0,18
P5	SNHQ...-M07 F40M	0,11	0,13	0,17
P6	SNHQ...-M07 F40M	0,11	0,13	0,17
P7	SNHQ...-M07 MP2500	0,11	0,13	0,17
P8	SNHQ...-M07 MP2500	0,12	0,14	0,18
P11	SNHQ...-M07 F40M	0,11	0,13	0,17
M1	SNHQ...-M07 F40M	0,13	0,14	0,19
M2	SNHQ...-M07 F40M	0,11	0,13	0,17
M3	SNHQ...-M07 F40M	0,090	0,10	0,14
M4	SNHQ...-M07 F40M	0,080	0,090	0,12
M5	SNHQ...-M07 F40M	0,080	0,090	0,12
K1	SNHQ...-M07 MP2500	0,13	0,14	0,19
K2	SNHQ...-M07 MP2500	0,11	0,13	0,17
K3	SNHQ...-M07 MP2500	0,11	0,13	0,17
K4	SNHQ...-M07 MP2500	0,11	0,13	0,17
K5	SNHQ...-M07 MP2500	0,10	0,12	0,16
K6	SNHQ...-M07 MP2500	0,11	0,13	0,17
K7	SNHQ...-M07 MP2500	0,10	0,12	0,16
N1	SNHQ...-E05 H25	0,14	0,16	0,22
N2	SNHQ...-E05 H25	0,14	0,16	0,22
N3	SNHQ...-E05 H25	0,14	0,16	0,22
N11	SNHQ...-E05 H25	0,14	0,16	0,22
S1	SNHQ...-M07 F40M	0,080	0,090	0,12
S2	SNHQ...-M07 F40M	0,080	0,090	0,12
S3	SNHQ...-M07 F40M	0,075	0,085	0,11
S11	SNHQ...-M07 F40M	0,090	0,10	0,14
S12	SNHQ...-M07 F40M	0,090	0,10	0,14
S13	SNHQ...-M07 F40M	0,080	0,090	0,12
H5	SNHQ...-M07 MP2500	0,075	0,090	0,12
H8	SNHQ...-M07 MP2500	0,060	0,070	0,090
H11	SNHQ...-M07 MP2500	0,075	0,090	0,12
H12	SNHQ...-M07 MP2500	0,075	0,090	0,12
H21	SNHQ...-M07 MP2500	0,060	0,070	0,090

SMG = Seco material group
f_z = mm/tooth
v_c= m/min
a_r/D_c = %
All cutting data are start values

SNHQ - Cutting data v_c = (m/min)

	MP2500			F30M			F40M			MM4500			H25		
SMG	30%	20%	10%	30%	20%	10%	30%	20%	10%	30%	20%	10%	30%	20%	10%
P1	260	280	305	210	220	245	200	210	230	160	170	190	—	—	—
P2	250	270	300	200	215	240	190	205	225	155	165	185	—	—	—
P3	220	235	260	175	185	205	165	175	195	135	145	160	—	—	—
P4	195	210	230	155	165	185	145	160	175	120	130	140	—	—	—
P5	190	200	220	150	160	175	145	150	170	115	125	135	—	—	—
P6	210	225	250	170	180	200	160	170	190	130	140	155	—	—	—
P7	200	210	235	160	170	185	150	160	180	120	130	145	—	—	—
P8	185	195	220	145	155	175	140	150	165	115	120	135	—	—	—
P11	195	205	230	155	165	180	145	155	175	120	125	140	—	—	—
M1	180	195	215	160	175	190	150	165	180	130	145	155	—	—	—
M2	150	160	180	135	145	160	130	135	150	110	120	130	—	—	—
M3	120	130	145	110	115	125	105	110	120	90	95	105	—	—	—
M4	95	100	110	85	90	100	80	85	95	70	75	80	—	—	—
M5	80	85	90	70	75	80	65	70	80	55	60	65	—	—	—
K1	195	215	235	155	170	190	150	165	180	—	—	—	—	—	—
K2	180	190	210	140	150	170	135	145	160	—	—	—	—	—	—
K3	150	160	180	120	130	140	115	120	135	—	—	—	—	—	—
K4	145	155	170	115	120	135	110	115	130	—	—	—	—	—	—
K5	90	95	105	70	75	80	65	70	80	—	—	—	—	—	—
K6	125	135	150	100	105	120	95	100	115	—	—	—	—	—	—
K7	115	120	130	90	95	105	85	90	100	—	—	—	—	—	—
N1	740	790	880	590	630	700	560	600	670	—	—	—	550	590	640
N2	600	640	710	475	510	570	450	485	540	—	—	—	440	475	520
N3	400	430	475	315	340	375	300	325	360	—	—	—	295	315	345
N11	455	490	540	360	390	430	345	370	410	—	—	—	335	360	395
S1	45	49	55	39	42	46	37	40	44	21	22	25	—	—	—
S2	37	39	43	31	33	37	30	32	35	17	18	20	—	—	—
S3	32	34	38	27	29	33	26	28	31	15	16	18	—	—	—
S11	65	70	75	55	60	65	50	55	60	29	32	35	—	—	—
S12	45	48	55	38	41	45	36	39	43	23	24	27	—	—	—
S13	36	38	42	30	33	36	29	31	34	18	19	21	—	—	—
H5	37	40	44	33	35	38	31	33	36	—	—	—	—	—	—
H8	39	42	46	34	37	41	33	35	39	—	—	—	—	—	—
H11	48	50	55	42	44	49	40	42	47	—	—	—	—	—	—
H12	75	80	90	70	70	80	65	70	75	—	—	—	—	—	—
H21	39	42	46	34	37	41	33	35	39	—	—	—	—	—	—

335.19 - Insert selection

SMG		f_z		
		30%	20%	10%
P1	335.19-...-M08 F40M	0,12	0,14	0,19
P2	335.19-...-M08 F40M	0,12	0,14	0,19
P3	335.19-...-M08 F40M	0,12	0,14	0,18
P4	335.19-...-M08 F40M	0,12	0,13	0,18
P5	335.19-...-M08 F40M	0,11	0,13	0,17
P6	335.19-...-M08 F40M	0,11	0,13	0,17
P7	335.19-...-M08 F40M	0,11	0,13	0,17
P8	335.19-...-MD09 F40M	0,13	0,15	0,20
P11	335.19-...-M08 F40M	0,11	0,13	0,17
M1	335.19-...-M08 F40M	0,12	0,14	0,19
M2	335.19-...-M08 F40M	0,11	0,13	0,17
M3	335.19-...-M08 F40M	0,090	0,10	0,14
M4	335.19-...-M08 F40M	0,080	0,090	0,12
M5	335.19-...-M08 F40M	0,080	0,090	0,12
K1	335.19-...-MD09 F40M	0,14	0,16	0,22
K2	335.19-...-MD09 F40M	0,13	0,15	0,20
K3	335.19-...-MD09 F40M	0,13	0,15	0,20
K4	335.19-...-MD09 F40M	0,13	0,15	0,20
K5	335.19-...-MD09 F40M	0,11	0,13	0,18
K6	335.19-...-MD09 F40M	0,13	0,15	0,20
K7	335.19-...-MD09 F40M	0,11	0,13	0,18
S1	335.19-...-M08 F40M	0,080	0,090	0,12
S2	335.19-...-M08 F40M	0,080	0,090	0,12
S3	335.19-...-M08 F40M	0,075	0,085	0,11
S11	335.19-...-M08 F40M	0,090	0,10	0,14
S12	335.19-...-M08 F40M	0,090	0,10	0,14
S13	335.19-...-M08 F40M	0,080	0,090	0,12
H5	335.19-...-MD09 F40M	0,085	0,10	0,13
H8	335.19-...-MD09 F40M	0,065	0,075	0,10
H11	335.19-...-MD09 F40M	0,085	0,10	0,13
H12	335.19-...-MD09 F40M	0,085	0,10	0,13
H21	335.19-...-MD09 F40M	0,065	0,075	0,10

SMG = Seco material group
f_z = mm/tooth
v_c= m/min
a_r/D_c = %
All cutting data are start values

335.19 - Cutting data v_c = (m/min)

SMG	MP2500			F40M		
	30%	20%	10%	30%	20%	10%
P1	235	255	280	185	200	220
P2	230	245	270	180	195	215
P3	205	215	240	155	165	185
P4	180	190	210	140	150	165
P5	170	180	200	135	145	160
P6	190	210	230	150	160	180
P7	180	195	215	145	150	170
P8	170	180	200	130	140	155
P11	175	190	210	140	145	165
M1	165	180	195	145	155	175
M2	135	145	160	120	130	145
M3	110	120	130	95	105	115
M4	85	95	100	75	80	90
M5	70	75	85	65	65	75
K1	185	195	215	145	155	170
K2	160	175	190	130	135	150
K3	135	145	160	110	115	130
K4	130	140	155	105	110	120
K5	80	85	95	65	65	75
K6	115	125	135	90	95	110
K7	105	110	120	80	85	95
N1	670	730	800	530	570	630
N2	540	590	640	425	460	510
N3	360	390	430	285	305	340
N11	415	450	490	325	350	390
S1	42	45	49	35	38	42
S2	34	36	40	28	30	33
S3	29	32	35	25	26	29
S11	60	60	70	49	55	60
S12	41	44	48	34	37	41
S13	33	35	39	27	29	33
H5	35	37	41	30	31	35
H8	37	39	43	31	33	37
H11	44	47	50	38	40	44
H12	70	75	85	60	65	70
H21	37	39	43	31	33	37

Cutter 335.18 - Insert LNK.

Width 8-10 mm - full side - Fixed pocket

Cylindrical (Cyl)

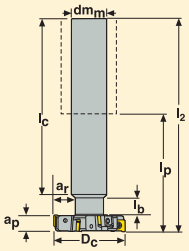

Combimaster (RE)

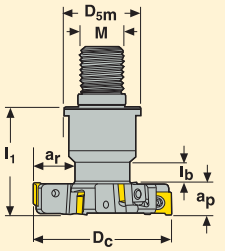

Type B for stub arbor (B)

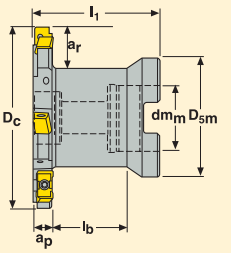

Type A for milling arbor (A)

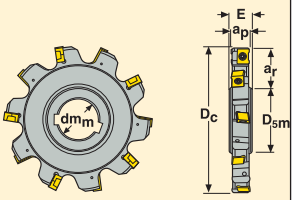

- For insert selection and cutting data recommendations, see page(s) 263-264
- For complete insert programme, see page(s) 604-605
- For spare parts and technical information, see page(s) 255-262

Part No.	Type of mounting	Dimensions in mm															Insert
		a_p	D_c	a_r	dm_m	D_{5m}	M	l_1	l_2	l_b	l_p	l_c		Z_c*	KG		
R335.18 -1632.0-08.1N	Cyl	8	32	9	16	–	–	–	140	23	92	108	2	1	0,3	17300	LNK.05..
R335.18 -2040.0-08.2N	Cyl	8	40	12	20	–	–	–	140	22	90	108	4	2	0,4	15400	LNK.05..
R335.18 -2550.0-08.3N	Cyl	8	50	15	25	–	–	–	150	29,5	94	110	6	3	0,6	13800	LNK.05..
-1650.RE-08.3N	RE	8	50	15,0	–	28	M16	35	–	12	–	–	6	3	0,2	13800	LNK.05..
R335.18 -3263.0-08.3N	Cyl	8	63	15,5	32	–	–	–	170	–	110	155	6	3	1,2	12300	LNK.05..
-063.08.22-3N	B	8	63	15,0	22	40	–	50	–	28,9	–	–	6	3	0,4	12300	LNK.05..
R335.18 -080.08.22-4N	B	8	80	23,5	22	40	–	50	–	28,9	–	–	8	4	0,5	10900	LNK.05..
335.18 -080.08.27-4N	A	8	80	19,2	27	41	–	–	–	–	–	–	8	4	0,3	10900	LNK.05..
R335.18 -100.08.27-5N	B	8	100	25,0	27	48	–	50	–	–	–	–	10	5	0,8	9700	LNK.05..
335.18 -100.08.27-5N	A	8	100	27,9	27	41	–	–	–	–	–	–	10	5	0,4	9700	LNK.05..
R335.18 -125.08.32-6N	B	8	125	34,0	32	58	–	50	–	–	–	–	12	6	1,0	8400	LNK.05..
335.18 -125.08.40-6N	A	8	125	33,4	40	55	–	–	–	–	–	–	12	6	0,6	8400	LNK.05..
R335.18 -1632.0-10.1N-LN05	Cyl	10	32	9	16	–	–	–	140	21	92	108	2	1	0,3	17300	LNK.05..
R335.18 -2040.0-10.2N-LN05	Cyl	10	40	12	20	–	–	–	140	20	90	108	4	2	0,4	15400	LNK.05..
-2040.0-10.2N	Cyl	10	40	12	20	–	–	–	140	20	90	108	4	2	0,4	14900	LNK.06..
R335.18 -2550.0-10.3N	Cyl	10	50	15	25	–	–	–	150	27,5	94	110	6	3	0,6	13400	LNK.06..
-1650.RE-10.3N	RE	10	50	15,0	–	28	M16	35	–	10	–	–	6	3	0,2	13400	LNK.06..
R335.18 -3263.0-10.3N	Cyl	10	63	15,5	32	–	–	–	170	–	110	155	6	3	1,2	11900	LNK.06..
-063.10.22-3N	B	10	63	15,0	22	40	–	50	–	27	–	–	6	3	0,4	11900	LNK.06..
R335.18 -3280.0-10.4N	Cyl	10	80	24	32	–	–	–	170	–	110	155	8	4	1,3	10500	LNK.06..
-080.10.22-4N	B	10	80	23,5	22	40	–	50	–	27	–	–	8	4	0,5	10500	LNK.06..
335.18 -080.10.27-4N	A	10	80	19,0	27	41	–	–	–	–	–	–	8	4	0,3	10500	LNK.06..
R335.18 -100.10.27-5N	B	10	100	26,0	27	48	–	50	–	–	–	–	10	5	0,9	9400	LNK.06..
335.18 -100.10.27-5N	A	10	100	28,0	27	41	–	–	–	–	–	–	10	5	0,4	9400	LNK.06..
R335.18 -125.10.32-6N	B	10	125	34,0	32	58	–	50	–	–	–	–	12	6	1,1	8400	LNK.06..
335.18 -125.10.40-6N	A	10	125	33,0	40	55	–	–	–	–	–	–	12	6	0,8	8400	LNK.06..

Please check availability in current price and stock-list

*Effective number of teeth

Cutter 335.18 - Insert LNK.

Width 12-14 mm - full side - Fixed pocket

Cylindrical (Cyl)

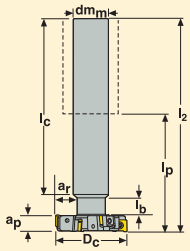

Combimaster (RE)

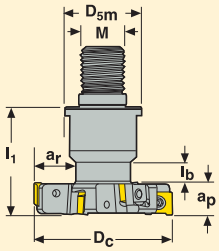

Type B for stub arbor (B)

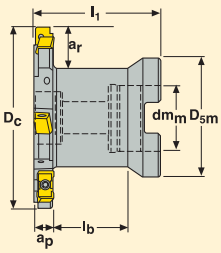

Type A for milling arbor (A)

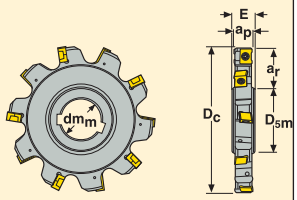

- For insert selection and cutting data recommendations, see page(s) 263-264
- For complete insert programme, see page(s) 605
- For spare parts and technical information, see page(s) 255-262

Part No.	Type of mounting	Dimensions in mm															Insert
		a_p	D_c	a_r	dm_m	D_{5m}	M	l_1	l_2	l_b	l_p	l_c		Z_c*	KG		
R335.18 -2550.0-12.3N	Cyl	12	50	15	25	–	–	–	150	25,5	94	110	6	3	0,6	13400	LNK.06..
-1650.RE-12.3N	RE	12	50	15,0	–	28	M16	35	–	8	–	–	6	3	0,3	13400	LNK.06..
R335.18 -3263.0-12.3N	Cyl	12	63	15,5	32	–	–	–	170	–	110	155	6	3	1,2	11900	LNK.06..
-063.12.22-3N	B	12	63	15,0	22	40	–	50	–	25	–	–	6	3	0,4	11900	LNK.06..
R335.18 -3280.0-12.4N	Cyl	12	80	24	32	–	–	–	170	–	110	155	8	4	1,3	10500	LNK.06..
-080.12.22-4N	B	12	80	23,5	22	40	–	50	–	25	–	–	8	4	0,8	10500	LNK.06..
335.18 -080.12.27-4N	A	12	80	19,0	27	41	–	–	–	–	–	–	8	4	0,3	10500	LNK.06..
R335.18 -100.12.27-5N	B	12	100	26,0	27	48	–	50	–	–	–	–	10	5	0,9	9400	LNK.06..
335.18 -100.12.27-5N	A	12	100	28,0	27	41	–	–	–	–	–	–	10	5	0,5	9400	LNK.06..
R335.18 -125.12.32-6N	B	12	125	34	32	58	–	50	–	–	–	–	12	6	1,1	8400	LNK.06..
335.18 -125.12.40-6N	A	12	125	33,0	40	55	–	–	–	–	–	–	12	6	0,8	8400	LNK.06..
R335.18 -063.14.22-3N	B	14	63	15,0	22	40	–	50	–	23	–	–	6	3	0,4	11900	LNK.08..
R335.18 -080.14.22-4N	B	14	80	23,5	22	40	–	50	–	23	–	–	8	4	0,6	10500	LNK.08..
R335.18 -100.14.27-5N	B	14	100	26,0	27	48	–	50	–	–	–	–	10	5	1,0	9400	LNK.08..
R335.18 -125.14.32-6N	B	14	125	34	32	58	–	50	–	–	–	–	12	6	1,3	8400	LNK.08..
335.18 -125.14.40-6N	A	14	125	34,0	40	55	–	–	–	–	–	–	12	6	0,9	8400	LNK.08..
335.18 -160.14.40-7N	A	14	160	51,0	40	55	–	–	–	–	–	–	14	7	1,6	7500	LNK.08..

Please check availability in current price and stock-list

*Effective number of teeth

Cutter 335.18 - Insert LNK.

Width 17-20 mm - full side - Fixed pockets

Type B for stub arbor (B)

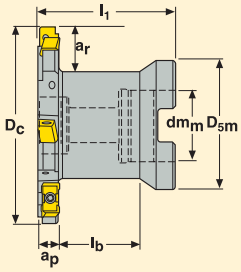

Type A for milling arbor (A)

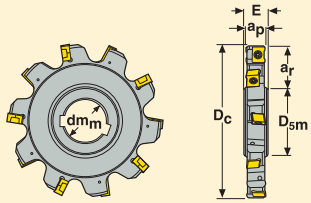

ap 17, 20 mm

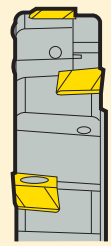

- For insert selection and cutting data recommendations, see page(s) 263-264
- For complete insert programme, see page(s) 605
- For spare parts and technical information, see page(s) 255-262

Part No.	Type of mounting	Dimensions in mm									Z_c*	KG		Insert
		a_p	D_c	a_r	dm_m	D_{5m}	l_1	l_b	E					
R335.18 -080.17.22-3N	B	17	80	24,0	22	40	50	20	–	9	3	0,6	10500	LNK.06..
R335.18 -100.17.27-3N	B	17	100	26,0	27	48	50	–	–	9	3	1,1	9400	LNK.06..
R335.18 -125.17.32-4N	B	17	125	33,5	32	58	50	–	–	12	4	1,4	8400	LNK.06..
335.18 -125.17.40-4N	A	17	125	33,0	40	55	–	–	20	12	4	1,1	8400	LNK.06..
R335.18 -160.17.40-5N	B	17	160	45,0	40	70	50	–	–	15	5	2,4	7500	LNK.06..
335.18 -160.17.40-5N	A	17	160	50,7	40	55	–	–	20	15	5	1,9	7500	LNK.06..
R335.18 -080.20.22-4N	B	20	80	24,0	22	40	50	16,9	–	12	4	0,7	10500	LNK.08..
R335.18 -100.20.27-5N	B	20	100	26,0	27	48	50	–	–	15	5	1,2	9400	LNK.08..
R335.18 -125.20.32-6N	B	20	125	33,5	32	58	50	–	–	18	6	1,6	8400	LNK.08..
335.18 -125.20.40-6N	A	20	125	34,0	40	55	–	–	20	18	6	1,2	8400	LNK.08..
R335.18 -160.20.40-7N	B	20	160	45,0	40	70	50	–	–	21	7	2,7	7500	LNK.08..
335.18 -160.20.40-7N	A	20	160	51,2	40	55	–	–	20	21	7	2,3	7500	LNK.08..

Please check availability in current price and stock-list

*Effective number of teeth

Cutter 335.18 - Insert LNK.

Width 8-10 mm - full side - Adjustable design

Type A for milling arbor (A)

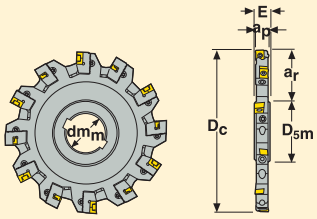

Type B for stub arbor (B)

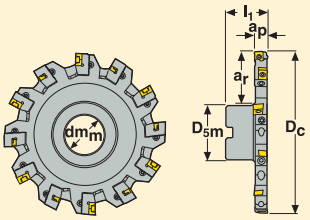

- For insert selection and cutting data recommendations, see page(s) 263-264
- For complete insert programme, see page(s) 604-605
- For spare parts and technical information, see page(s) 255-262

Part No.	Type of mounting	Dimensions in mm											Insert
		a_p	D_c	a_r	dm_m	D_{5m}	l_1	E		Z_c*	KG		
R335.18 -080.0810.27-3N	B	8-10	80	14,8	27	48	50	–	6	3	0,7	10900	LNK.05..
R335.18 -100.0810.27-4N	B	8-10	100	24,8	27	48	50	–	8	4	0,8	9400	LNK.05..
335.18 -100.0810.27-4N	A	8-10	100	27,2	27	41	–	15	8	4	0,4	9400	LNK.05..
R335.18 -125.0810.32-5N	B	8-10	125	32,3	32	58	50	–	10	5	1,0	8400	LNK.05..
335.18 -125.0810.40-5N	A	8-10	125	32,7	40	55	–	15	10	5	0,6	8400	LNK.05..
R335.18 -160.0810.40-6N	B	8-10	160	43,8	40	70	50	–	12	6	1,6	7500	LNK.05..
335.18 -160.0810.40-6N	A	8-10	160	50,2	40	55	–	15	12	6	1,0	7500	LNK.05..
R335.18 -200.0810XL.40-7N	B	8-10	200	53,5	40	90	50	–	14	7	2,6	6700	LNK.05..
335.18 -200.0810XL.50-7N	A	8-10	200	63,5	50	69	–	15	14	7	1,4	6700	LNK.05..
R335.18 -250.0810XL.40-9N	B	8-10	250	78	40	90	50	–	18	18	4,4	6000	LNK.05..
335.18 -250.0810XL.50-9N	A	8-10	250	88,5	50	69	–	15	18	9	2,3	6000	LNK.05..
335.18 -315.0810XL.50-12N	A	8-10	315	121	50	69	–	15	24	12	2,4	5300	LNK.05..
R335.18 -080.1012.27-3N	B	10-12	80	14,8	27	48	50	–	6	3	0,7	10500	LNK.06..
R335.18 -100.1012.27-4N	B	10-12	100	24,8	27	48	50	–	8	4	0,9	9400	LNK.06..
335.18 -100.1012.27-4N	A	10-12	100	27,2	27	41	–	15	8	4	0,4	9400	LNK.06..
R335.18 -125.1012.32-5N	B	10-12	125	32,3	32	58	50	–	10	5	1,1	8400	LNK.06..
335.18 -125.1012.40-5N	A	10-12	125	32,7	40	55	–	15	10	5	0,7	8400	LNK.06..
R335.18 -160.1012.40-6N	B	10-12	160	43,8	40	70	50	–	12	6	1,7	7500	LNK.06..
335.18 -160.1012.40-6N	A	10-12	160	50,2	40	55	–	15	12	6	1,2	7500	LNK.06..
R335.18 -200.1012XL.40-7N	B	10-12	200	53,5	40	90	50	–	14	7	2,1	6700	LNK.06..
335.18 -200.1012XL.50-7N	A	10-12	200	63,5	50	69	–	15	14	7	2,1	6700	LNK.06..
R335.18 -250.1012XL.40-9N	B	10-12	250	78	40	90	50	–	18	9	2,3	6000	LNK.06..
335.18 -250.1012XL.50-9N	A	10-12	250	88,5	50	69	–	15	18	9	2,8	6000	LNK.06..
335.18 -315.1012XL.50-12N	A	10-12	315	121	50	69	–	15	24	12	4,5	5300	LNK.06..

Please check availability in current price and stock-list

*Effective number of teeth

Adjustable cutter may be ordered with the cutting width set to any value within its range, see page 258 for more info.
All adj. cutters are set to the minimum cutter width, +/- 0,02 mm.

Cutter 335.18 - Insert LNK.

Width 12-15 mm - full side - Adjustable design

Type A for milling arbor (A)

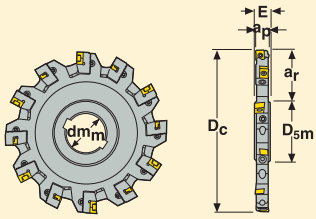

Type B for stub arbor (B)

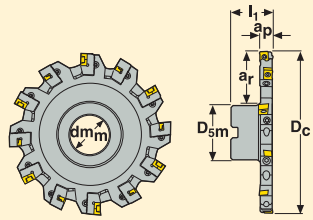

- For insert selection and cutting data recommendations, see page(s) 263-264
- For complete insert programme, see page(s) 605
- For spare parts and technical information, see page(s) 255-262

Part No.	Type of mounting	Dimensions in mm											Insert
		a_p	D_c	a_r	dm_m	D_{5m}	l_1	E		Z_c*	KG		
R335.18 -080.1215.27-3N	B	12-15	80	14,8	27	48	50	–	6	3	0,7	10500	LNK.08..
R335.18 -100.1215.27-4N	B	12-15	100	24,8	27	48	50	–	8	4	0,9	9400	LNK.08..
335.18 -100.1215.27-4N	A	12-15	100	27,2	27	41	–	15	8	4	0,6	9400	LNK.08..
R335.18 -125.1215.32-5N	B	12-15	125	32,3	32	58	50	–	10	5	1,2	8400	LNK.08..
335.18 -125.1215.40-5N	A	12-15	125	32,7	40	55	–	15	10	5	0,8	8400	LNK.08..
R335.18 -160.1215.40-6N	B	12-15	160	43,8	40	70	50	–	12	6	1,9	7500	LNK.08..
335.18 -160.1215.40-6N	A	12-15	160	50,2	40	55	–	15	12	6	1,4	7500	LNK.08..
R335.18 -200.1215XL.40-7N	B	12-15	200	53,5	40	90	50	–	14	7	3,1	6700	LNK.08..
335.18 -200.1215XL.50-7N	A	12-15	200	63,5	50	69	–	15	14	7	2,0	6700	LNK.08..
R335.18 -250.1215XL.40-9N	B	12-15	250	78	40	90	50	–	18	9	4,4	6000	LNK.08..
335.18 -250.1215XL.50-9N	A	12-15	250	88,5	50	69	–	15	18	9	3,3	6000	LNK.08..
335.18 -315.1215XL.50-12N	A	12-15	315	121	50	69	–	15	24	12	5,5	5300	LNK.08..

Please check availability in current price and stock-list

*Effective number of teeth

Adjustable cutter may be ordered with the cutting width set to any value within its range, see page 258 for more info.
All adj. cutters are set to the minimum cutter width, +/- 0,02 mm.

Cutter 335.25 - Insert XNHQ and LNHQ

Width 15/20/25 mm - full side and face - Fixed pockets

B type for stub arbor (B)

Dia = 80

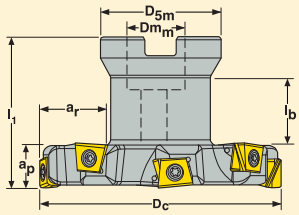

Dia > 80

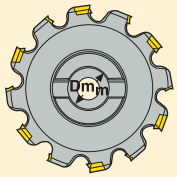

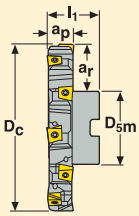

A type for milling arbor (A)

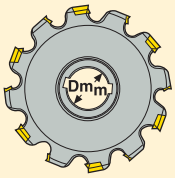

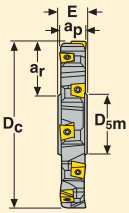

- For insert selection and cutting data recommendations, see page(s) 269-272, 265-268
- For complete insert programme, see page(s) 606, 638
- For spare parts and technical information, see page(s) 255-262

Part No.	Type of mounting	Dimensions in mm a_p	D_c	a_r	dm_m	D_{5m}	l_1	l_b	E		Z_c*	KG		Insert: First choice	Insert: Alternative choice
R335.25 -080.15.22-4NA	B	15	80	22,7	22	40	50	21,4	–	8	4	0,6	10200	XNHQ09…	–
-100.15.27-5NA	B	15	100	25,3	27	48	50	–	–	10	5	1,0	9200	XNHQ09…	–
-125.15.32-6NA	B	15	125	32,8	32	58	50	–	–	12	6	1,5	8200	XNHQ09…	–
-160.15.40-7NA	B	15	160	44,3	40	70	50	–	–	14	7	2,4	7200	XNHQ09…	–
335.25 -160.15.40-7N	A	15	160	52,0	40	55	–	–	15	14	7	1,7	7200	XNHQ09…	–
R335.25 -200.15.40-8N	B	15	200	54,3	40	90	50	–	–	16	8	3,6	6500	XNHQ09…	–
335.25 -200.15.50-8N	A	15	200	64,5	50	69	–	–	15	16	8	2,6	6500	XNHQ09…	–
R335.25 -100.20.27-4NA	B	20	100	25,3	27	48	50	–	–	8	4	1,2	7200	XNHQ12…	–
-125.20.32-5NA	B	20	125	32,8	32	58	50	–	–	10	5	1,8	6500	XNHQ12…	–
-160.20.40-6NA	B	20	160	44,3	40	70	50	–	–	12	6	2,9	5700	XNHQ12…	–
335.25 -160.20.40-6N	A	20	160	51,5	40	55	–	–	20	12	6	2,2	5600	XNHQ12…	–
R335.25 -200.20.40-7N	B	20	200	54,3	40	90	50	49,0	–	14	7	4,3	5100	XNHQ12…	–
335.25 -200.20.50-7N	A	20	200	64,3	50	69	–	–	20	14	7	3,5	5100	XNHQ12…	–
R335.25 -250.20.60-9N	B	20	250	59,3	60	130	50	–	–	18	9	7,2	4600	XNHQ12…	–
335.25 -250.20.50-9N	A	20	250	88,5	50	71	–	–	20	18	9	5,8	4600	XNHQ12…	–
R335.25 -125.25.32-5NA	B	25	125	33,0	32	58	50	–	–	10	5	1,9	4900	XNHQ14…	LNHQ14…
-160.25.40-6NA	B	25	160	44,4	40	70	50	–	–	12	6	3,1	4400	XNHQ14…	LNHQ14…
335.25 -160.25.40-6N	A	25	160	50,7	40	55	–	–	32	12	6	2,7	4400	XNHQ14…	LNHQ14…
R335.25 -200.25.40-7N	B	25	200	54,5	40	90	50	–	–	14	7	5,0	3900	XNHQ14…	LNHQ14…
335.25 -200.25.50-7N	A	25	200	62,7	50	71	–	–	32	14	7	4,3	3900	XNHQ14…	LNHQ14…
-250.25.50-9N	A	25	250	87,7	50	71	–	–	32	18	9	7,3	3500	XNHQ14…	LNHQ14…
R335.25 -250.25.60-9N	B	25	250	59,5	60	130	50	–	–	18	9	8,3	3500	XNHQ14…	LNHQ14…

Please check availability in current price and stock-list

*Effective number of teeth

Type B cutters, from diameter 80 to 160 mm are equipped with central coolant channels

Cutter 335.25 - Insert XNHQ

Width 13 - 21 mm - full side and face - Adjustable design

B type for stub arbor (B)

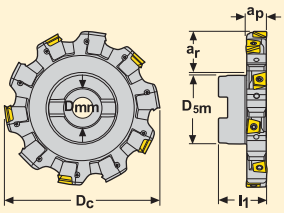

A type for milling arbor (A)

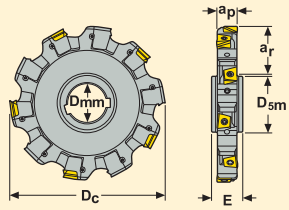

- For insert selection and cutting data recommendations, see page(s) 265-268
- For complete insert programme, see page(s) 638
- For spare parts and technical information, see page(s) 255-262

Part No.	Type of mounting	Dimensions in mm								Z_c*	KG		Insert
		a_p	D_c	a_r	dm_m	D_{5m}	l_1	E					
R335.25 -100.1317.27-3N	B	13,5-17,0	100	24,8	27	48	50	–	6	3	1,0	9200	XNHQ09..
R335.25 -125.1317.32-4N	B	13,5-17,0	125	32,3	32	58	50	–	8	4	1,4	8200	XNHQ09..
335.25 -125.1317.40-4N	A	13,5-17,0	125	32,9	40	55	–	17	8	4	0,9	8200	XNHQ09..
R335.25 -160.1317.40-6N	B	13,5-17,0	160	43,8	40	70	50	–	12	6	2,3	7200	XNHQ09..
335.25 -160.1317.40-6N	A	13,5-17,0	160	50,5	40	55	–	17	12	6	1,5	7200	XNHQ09..
R335.25 -200.1317.40-7N	B	13,5-17,0	200	54,0	40	90	50	–	14	7	3,6	6500	XNHQ09..
335.25 -200.1317.50-7N	A	13,5-17,0	200	63,5	50	69	–	17	14	7	2,5	6500	XNHQ09..
R335.25 -250.1317XL.60-8N	B	13,5-17,0	250	59,0	60	130	50	–	16	8	6,0	5800	XNHQ09..
335.25 -250.1317XL.50-8N	A	13,5-17,0	250	88,5	50	69	–	17	16	8	3,9	5800	XNHQ09..
R335.25 -315.1317XL.60-10N	B	13,5-17,0	315	91,5	60	130	50	–	20	10	8,6	5200	XNHQ09..
335.25 -315.1317XL.50-10N	A	13,5-17,0	315	121,0	50	69	–	17	20	10	6,5	5200	XNHQ09..
R335.25 -100.1721.27-3N	B	17,0-21,0	100	24,8	27	48	50	–	6	3	1,1	7200	XNHQ12..
R335.25 -125.1721.32-4N	B	17,0-21,0	125	32,3	32	58	50	–	8	4	1,6	6500	XNHQ12..
335.25 -125.1721.40-4N	A	17,0-21,0	125	32,9	40	55	–	21	8	4	1,1	8200	XNHQ12..
R335.25 -160.1721.40-5N	B	17,0-21,0	160	43,8	40	70	50	–	10	5	2,7	5700	XNHQ12..
335.25 -160.1721.40-5N	A	17,0-21,0	160	50,5	40	55	–	21	10	5	1,9	7200	XNHQ12..
R335.25 -200.1721.40-6N	B	17,0-21,0	200	54,0	40	90	50	–	12	6	4,1	5100	XNHQ12..
335.25 -200.1721.50-6N	A	17,0-21,0	200	63,5	50	69	–	21	12	6	3,2	6500	XNHQ12..
R335.25 -250.1721XL.60-8N	B	17,0-21,0	250	59,0	60	130	50	–	16	8	6,7	4600	XNHQ12..
335.25 -250.1721XL.50-8N	A	17,0-21,0	250	88,5	50	69	–	21	16	8	4,9	5800	XNHQ12..
R335.25 -315.1721XL.60-10N	B	17,0-21,0	315	91,5	60	130	50	–	20	10	10,0	4100	XNHQ12..
335.25 -315.1721XL.50-10N	A	17,0-21,0	315	121,0	50	69	–	21	20	10	8,2	5200	XNHQ12..

Please check availability in current price and stock-list

*Effective number of teeth

Adjustable cutter may be ordered with the cutting width set to any value within its range, see MN2015 Milling for more info.
All adj. cutters are set to the minimum cutter width, +/- 0,02 mm.

Cutter 335.25 - Insert XNHQ and LNHQ

Width 21 - 32 mm - full side and face - Adjustable design

B type for stub arbor (B)

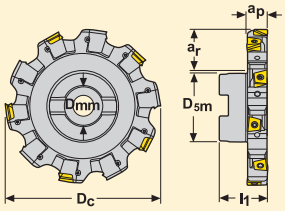

A type for milling arbor (A)

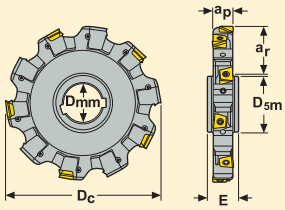

- For insert selection and cutting data recommendations, see page(s) 271-270
- For complete insert programme, see page(s) 606, 638
- For spare parts and technical information, see page(s) 255-262

Part No.	Type of mounting	Dimensions in mm											Insert: First choice	Insert: Alternative choice
		a_p	D_c	a_r	dm_m	D_{5m}	l_1	E		Z_c*	KG			
R335.25 -125.2126.32-4N	B	21-26	125	32,3	32	58	50	–	8	4	1,7	4900	XNHQ1407...	LNHQ1407...
335.25 -125.2126.40-4N	A	21-26	125	32,7	40	55	–	32	8	4	1,3	4900	XNHQ1407...	LNHQ1407...
R335.25 -160.2126.40-5N	B	21-26	160	43,8	40	70	50	–	10	5	2,9	4400	XNHQ1407...	LNHQ1407...
335.25 -160.2126.40-5N	A	21-26	160	50,3	40	55	–	32	10	5	2,3	4400	XNHQ1407...	LNHQ1407...
R335.25 -200.2126.40-6N	B	21-26	200	54	40	90	50	–	12	6	4,6	3900	XNHQ1407...	LNHQ1407...
335.25 -200.2126.50-6N	A	21-26	200	63,3	50	69	–	32	12	6	3,9	3900	XNHQ1407...	LNHQ1407...
R335.25 -250.2126XL.60-7N	B	21-26	250	59	60	130	50	–	14	7	7,3	3500	XNHQ1407...	LNHQ1407...
335.25 -250.2126XL.50-7N	A	21-26	250	88,3	50	69	–	32	14	7	6,0	3500	XNHQ1407...	LNHQ1407...
R335.25 -315.2126XL.60-9N	B	21-26	315	91,5	60	130	50	–	18	9	11,3	3100	XNHQ1407...	LNHQ1407...
335.25 -315.2126XL.60-9N	A	21-26	315	113,3	60	84	–	32	18	9	10,0	3100	XNHQ1407...	LNHQ1407...
R335.25 -160.2632.40-5N	B	26-32	160	43,8	40	70	50	–	10	5	3,4	4600	XNHQ1707...	LNHQ1707...
335.25 -160.2632.40-5N	A	26-32	160	50,3	40	55	–	32	10	5	2,9	4600	XNHQ1707...	LNHQ1707...
R335.25 -200.2632.40-6N	B	26-32	200	54	40	90	50	–	12	6	5,3	4100	XNHQ1707...	LNHQ1707...
335.25 -200.2632.50-6N	A	26-32	200	63,3	50	69	–	32	12	6	4,8	4100	XNHQ1707...	LNHQ1707...
R335.25 -250.2632XL.60-7N	B	26-32	250	59	60	130	50	–	14	7	8,4	3700	XNHQ1707...	LNHQ1707...
335.25 -250.2632XL.50-7N	A	26-32	250	88,3	50	69	–	32	14	7	7,4	3700	XNHQ1707...	LNHQ1707...
R335.25 -315.2632XL.60-9N	B	26-32	315	91,5	60	130	50	–	18	9	13,4	3300	XNHQ1707...	LNHQ1707...
335.25 -315.2632XL.60-9N	A	26-32	315	113,3	60	84	–	32	18	9	12,3	3300	XNHQ1707...	LNHQ1707...

Please check availability in current price and stock-list

*Effective number of teeth

Adjustable cutter may be ordered with the cutting width set to any value within its range, see MN2015 Milling for more info.
All adj. cutters are set to the minimum cutter width, +/- 0,02 mm.

Cutter 335.29 - Round inserts

Width 5-12 - full side - radius profile - Fixed pockets

Cylindrical (Cyl)

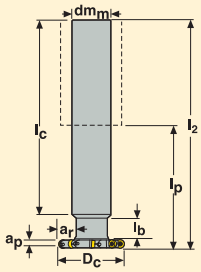

Combimaster (RE)

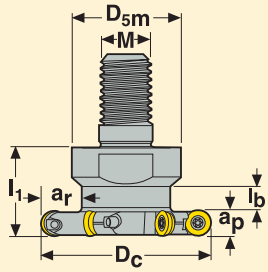

Type B for stub arbor (B)

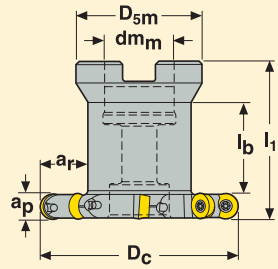

- For insert selection and cutting data recommendations, see page(s) 283-284
- For complete insert programme, see page(s) 614-615
- For spare parts and technical information, see page(s) 255-262

Part No.		Type of mounting	Dimensions in mm															Insert
			a_p	D_c	a_r	dm_m	D_{5m}	M	l_1	l_2	l_b	l_p	l_c		Z_c*	KG		
R335.29	-1225.0-05.4N-R25A	Cyl	5	25	6,9	12	–	–	–	110	10	65	94	4	4	0,1	44800	RD..0501
	-1632.0-05.5N-R25A	Cyl	5	32	8,4	16	–	–	–	130	10	82	114	5	5	0,2	39600	RD..0501
	-2040.0-05.6N-R25A	Cyl	5	40	10,4	20	–	–	–	140	10	90	124	6	6	0,4	35400	RD..0501
	-2550.0-05.8N-R25A	Cyl	5	50	12,9	25	–	–	–	150	10	94	134	8	8	0,6	31700	RD..0501
R335.29	-1225.0-06.4N-R3A	Cyl	6	25	6,9	12	–	–	–	110	10	65	93	4	4	0,1	20600	RD..06T1
	-1632.0-06.5N-R3A	Cyl	6	32	8,4	16	–	–	–	130	10	82	113	5	5	0,2	18700	RD..06T1
	-2040.0-06.6N-R3A	Cyl	6	40	10,4	20	–	–	–	140	10	90	123	6	6	0,4	16300	RD..06T1
	-1240.RE-06.6N-R3A	RE	6	40	10	–	23	M12	28	–	10	–	–	6	6	0,2	17600	RD..06T1
	-2550.0-06.8N-R3A	Cyl	6	50	12,9	25	–	–	–	150	10	94	133	8	8	0,6	17300	RD..06T1
	-1650.RE-06.8N-R3A	RE	6	50	12,5	–	30	M16	28	–	9	–	–	8	8	0,2	17300	RD..06T1
	-063.06.22-10N-R3A	B	6	63	15	22	40	–	50	–	30,6	–	–	10	10	0,4	13900	RD..06T1
R335.29	-1632.0-07.5N-R35A	Cyl	7	32	8,4	16	–	–	–	130	10	82	112	5	5	0,2	31600	RD..0702
	-1240.RE-07.6N-R35A	RE	7	40	10	–	23	M12	28	–	9	–	–	6	6	0,2	28200	RD..0702
	-1650.RE-07.7N-R35A	RE	7	50	12,5	–	30	M16	28	–	8	–	–	7	7	0,2	25300	RD..0702
	-063.07.22-10N-R35A	B	7	63	15	22	40	–	50	–	29,6	–	–	10	10	0,4	22500	RD..0702
R335.29	-1632.0-08.4N-R4A	Cyl	8	32	8,4	16	–	–	–	130	10	82	111	4	4	0,2	23300	RD..08..
	-2040.0-08.5N-R4A	Cyl	8	40	10,4	20	–	–	–	140	10	90	121	5	5	0,4	18800	RD..08..
	-1240.RE-08.5N-R4A	RE	8	40	10	–	23	M12	28	–	8	–	–	5	5	0,2	18800	RD..08..
	-2550.0-08.6N-R4A	Cyl	8	50	12,9	25	–	–	–	150	10	94	131	6	6	0,6	17300	RD..08..
	-1650.RE-08.6N-R4A	RE	8	50	12,5	–	30	M16	28	–	7	–	–	6	6	0,2	17300	RD..08..
	-063.08.22-8N-R4A	B	8	63	15	22	40	–	50	–	28,6	–	–	8	8	0,4	15600	RD..08..
	-080.08.27-10N-R4A	B	8	80	20	27	48	–	50	–	26,8	–	–	10	10	0,5	13700	RD..08..
R335.29	-1650.RE-10.6N-R5A	RE	10	50	12,5	–	30	M16	28	–	4,3	–	–	6	3	0,2	15800	RD..10T3
	-063.10.22-6N-R5A	B	10	63	15	22	40	–	50	–	26,6	–	–	6	3	0,4	13500	RD..10T3
	-080.10.27-8N-R5A	B	10	80	20	27	48	–	50	–	24,7	–	–	8	4	0,5	12000	RD..10T3
R335.29I	-1650.RE-12.4N-R6A	RE	12	50	12,5	–	30	M16	28	–	4,3	–	–	4	2	0,2	11200	RP..1204
R335.29I	-063.12.22-6N-R6A	B	12	63	15	22	40	–	50	–	24,6	–	–	6	3	0,4	10200	RP..1204
	-080.12.27-8N-R6A	B	12	80	20	27	48	–	50	–	22,7	–	–	8	4	0,5	10000	RP..1204

Please check availability in current price and stock-list

*Effective number of teeth

Note: All cutters are equipped with central coolant channels
R335.29I Disc Milling cutters offer indexing possibility - Indexing screw SX2035-T05P included in the delivery

Cutter 335.18 - Round inserts

Width 8-12 mm - full side - radius profile - Adjustable

Type B for stub arbor (B)

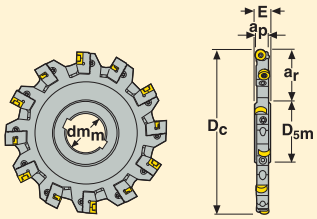

Type A for milling arbor (A)

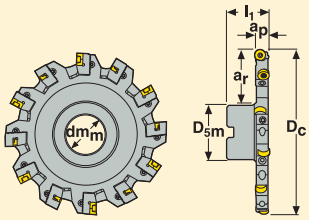

- For insert selection and cutting data recommendations, see page(s) 279-282
- For complete insert programme, see page(s) 614
- For spare parts and technical information, see page(s) 255-262

Part No.	Type of mounting	Dimensions in mm											Insert
		a_p	D_c	a_r	dm_m	D_{5m}	l_1	E		Z_c*	KG		
R335.18 -080.0810.27-6N-R4	B	8-10	82	15,8	27	48	50	–	6	6	0,7	10500	RD..08..
R335.18 -100.0810.27-8N-R4	B	8-10	102	25,8	27	48	50	–	8	8	0,8	9400	RD..08..
335.18 -100.0810.27-8N-R4	A	8-10	102	28,2	27	41	–	15	8	8	0,4	9400	RD..08..
R335.18 -125.0810.32-10N-R4	B	8-10	127	32,3	32	58	50	–	10	10	1,0	8400	RD..08..
335.18 -125.0810.40-10N-R4	A	8-10	127	33,7	40	55	–	15	10	10	0,6	8400	RD..08..
R335.18 -160.0810.40-12N-R4	B	8-10	162	44,8	40	70	50	–	12	12	1,6	7500	RD..08..
335.18 -160.0810.40-12N-R4	A	8-10	162	51,2	40	55	–	15	12	12	1,0	7500	RD..08..
R335.18 -200.0810XL.40-14N-R4	B	8-10	200	53,5	40	90	50	–	14	7	2,6	6700	RD..08..
335.18 -200.0810XL.50-14N-R4	A	8-10	200	63,5	50	69	–	15	14	14	1,4	6700	RD..08..
R335.18 -250.0810XL.40-18N-R4	B	8-10	250	78	40	90	50	–	18	18	3,5	6000	RD..08..
335.18 -250.0810XL.50-18N-R4	A	8-10	250	88,5	50	69	–	15	18	18	2,3	6000	RD..08..
335.18 -315.0810XL.50-24N-R4	A	8-10	315	121	50	69	–	15	24	24	3,7	5300	RD..08..
R335.18 -080.1012.27-3N-R5	B	10-12	82	15,8	27	48	50	–	6	3	0,7	10500	RD..10T3
R335.18 -100.1012.27-4N-R5	B	10-12	102	25,8	27	48	50	–	8	4	0,9	9400	RD..10T3
335.18 -100.1012.27-4N-R5	A	10-12	102	28,2	27	41	–	15	8	4	0,6	9400	RD..10T3
R335.18 -125.1012.32-5N-R5	B	10-12	127	33,3	32	58	50	–	10	5	1,1	8400	RD..10T3
335.18 -125.1012.40-5N-R5	A	10-12	127	33,7	40	55	–	15	10	5	0,7	8400	RD..10T3
R335.18 -160.1012.40-6N-R5	B	10-12	162	44,8	40	70	50	–	12	6	1,7	7500	RD..10T3
335.18 -160.1012.40-6N-R5	A	10-12	162	51,2	40	55	–	15	12	6	1,3	7500	RD..10T3
R335.18 -200.1012XL.40-7N-R5	B	10-12	200	53,5	40	90	50	–	14	7	2,2	6700	RD..10T3
335.18 -200.1012XL.50-7N-R5	A	10-12	200	63,5	50	69	–	15	14	7	1,7	6700	RD..10T3
R335.18 -250.1012XL.40-9N-R5	B	10-12	250	78	40	90	50	–	18	9	4,0	6000	RD..10T3
335.18 -250.1012XL.50-9N-R5	A	10-12	250	88,5	50	69	–	15	18	9	1,7	6000	RD..10T3
335.18 -315.1012XL.50-12N-R5	A	10-12	315	121	50	69	–	15	24	12	4,6	5300	RD..10T3

Please check availability in current price and stock-list

*Effective number of teeth

Adjustable cutter may be ordered with the cutting width set to any value within its range, see page 258 for more info.
All adj. cutters are set to the minimum cutter width, +/- 0,02 mm.

Cutter 335.18 - Round inserts

Width 12-18,5 mm - radius profile - Adjustable

Type B for stub arbor (B)

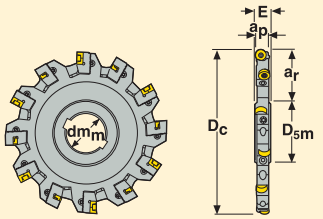

Type A for milling arbor (A)

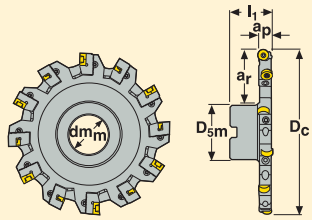

- For insert selection and cutting data recommendations, see page(s) [XXX]-286
- For complete insert programme, see page(s) 615
- For spare parts and technical information, see page(s) 255-262

Part No.	Type of mounting	Dimensions in mm								Z_c*	KG		Insert
		a_p	D_c	a_r	dm_m	D_{5m}	l_1	E					
R335.18 -080.1215.27-3N-R6	B	12-15	82	15,8	27	48	50	–	6	3	0,7	10000	RP..1204
R335.18 -100.1215.27-4N-R6	B	12-15	102	25,8	27	48	50	–	8	4	0,9	9400	RP..1204
335.18 -100.1215.27-4N-R6	A	12-15	102	28,2	27	41	–	15	8	4	0,8	9400	RP..1204
R335.18 -125.1215.32-5N-R6	B	12-15	127	33,3	32	58	50	–	10	5	1,2	8400	RP..1204
335.18 -125.1215.40-5N-R6	A	12-15	127	33,7	40	55	–	15	10	5	0,9	8400	RP..1204
R335.18 -160.1215.40-6N-R6	B	12-15	162	44,8	40	70	50	–	12	6	1,9	7500	RP..1204
335.18 -160.1215.40-6N-R6	A	12-15	162	51,2	40	55	–	15	12	6	1,5	7500	RP..1204
R335.18 -200.1215XL.40-7N-R6	B	12-15	200	53,5	40	90	50	–	14	7	3,2	6700	RP..1204
335.18 -200.1215XL.50-7N-R6	A	12-15	200	63,5	50	69	–	15	14	7	2,0	6700	RP..1204
R335.18 -250.1215XL.40-9N-R6	B	12-15	250	78	40	90	50	–	18	9	4,5	6000	RP..1204
335.18 -250.1215XL.50-9N-R6	A	12-15	250	88,5	50	69	–	15	18	9	3,4	6000	RP..1204
335.18 -315.1215XL.50-12N-R6	A	12-15	315	121	50	69	–	15	24	12	5,5	5300	RP..1204
R335.18 -125.1418.40-4N-R8	B	16-18,5	130	26	40	70	51	–	8	4	1,4	7800	RP..1605
335.18 -125.1418.40-4N-R8	A	16-18,5	130	34,5	40	55	–	18	8	4	1,2	7800	RP..1605
R335.18 -160.1418.40-6N-R8	B	16-18,5	165	43,5	40	70	51	–	12	6	2,7	6900	RP..1605
335.18 -160.1418.40-6N-R8	A	16-18,5	165	52	40	55	–	18	12	6	2,0	6900	RP..1605
R335.18 -200.1418.40-7N-R8	B	16-18,5	205	53,5	40	90	51	–	14	7	3,7	6100	RP..1605
335.18 -200.1418.50-7N-R8	A	16-18,5	205	65	50	69	–	18	14	7	2,5	6100	RP..1605
R335.18 -250.1418.60-9N-R8	B	16-18,5	255	58,5	60	130	51	–	18	9	6,2	5500	RP..1605
335.18 -250.1418.50-9N-R8	A	16-18,5	255	90	50	69	–	18	18	9	4,3	5500	RP..1605
R335.18 -315.1418.60-12N-R8	B	16-18,5	320	91	60	130	51	–	24	12	8,8	4900	RP..1605
335.18 -315.1418.50-12N-R8	A	16-18,5	320	122,5	50	69	–	18	24	12	6,8	4900	RP..1605

Please check availability in current price and stock-list

*Effective number of teeth

Adjustable cutter may be ordered with the cutting width set to any value within its range, see page 258 for more info.
All adj. cutters are set to the minimum cutter width, +/- 0,02 mm.

Cutter 335.18 - Insert LNK.

Width max 5-6 mm - half side - Right hand with cassettes

Type B for stub arbor (B)

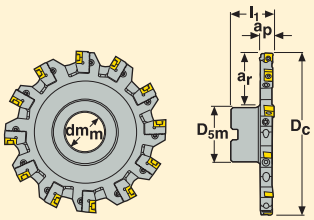

Type A for milling arbor (A)

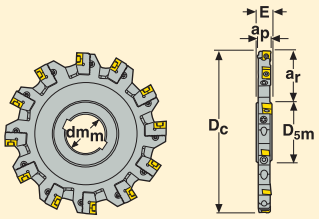

- For insert selection and cutting data recommendations, see page(s) 263-264
- For complete insert programme, see page(s) 604-605
- For spare parts and technical information, see page(s) 255-262

Part No.	Type of mounting	Dimensions in mm											Insert
		a_p	D_c	a_r	dm_m	D_{5m}	l_1	E		Z_c*	KG		
R335.18 -080.0810.27-6R	B	5	80	14,8	27	48	50	–	6	6	0,7	10500	LNK.05..
R335.18 -100.0810.27-8R	B	5	100	24,8	27	48	50	–	8	8	0,8	9400	LNK.05..
335.18 -100.0810.27-8R	A	5	100	27,2	27	41	–	15	8	8	0,4	9400	LNK.05..
R335.18 -125.0810.32-10R	B	5	125	32,3	32	58	50	–	10	10	1,0	8400	LNK.05..
335.18 -125.0810.40-10R	A	5	125	32,7	40	55	–	15	10	10	0,6	8400	LNK.05..
R335.18 -160.0810.40-12R	B	5	160	43,8	40	70	50	–	12	12	1,5	7500	LNK.05..
335.18 -160.0810.40-12R	A	5	160	50,2	40	55	–	15	12	12	1,0	7500	LNK.05..
R335.18 -200.0810XL.40-14R	B	5	200	53,5	40	90	50	–	14	14	2,7	6700	LNK.05..
335.18 -200.0810XL.50-14R	A	5	200	63,5	50	69	–	15	14	14	1,7	6700	LNK.05..
R335.18 -250.0810XL.40-18R	B	5	250	78	40	90	50	–	18	18	3,5	6000	LNK.05..
335.18 -250.0810XL.50-18R	A	5	250	88,5	50	69	–	15	18	18	1,7	6000	LNK.05..
335.18 -315.0810XL.50-24R	A	5	315	121	50	69	–	15	24	24	1,9	5300	LNK.05..
R335.18 -080.1012.27-6R	B	6	80	14,8	27	48	50	–	6	6	0,8	10500	LNK.06..
R335.18 -100.1012.27-8R	B	6	100	24,8	27	48	50	–	8	8	1,2	9400	LNK.06..
335.18 -100.1012.27-8R	A	6	100	27,2	27	41	–	15	8	8	0,4	9400	LNK.06..
R335.18 -125.1012.32-10R	B	6	125	32,3	32	58	50	–	10	10	1,0	8400	LNK.06..
335.18 -125.1012.40-10R	A	6	125	32,7	40	55	–	15	10	10	0,7	8400	LNK.06..
R335.18 -160.1012.40-12R	B	6	160	43,8	40	70	50	–	12	12	1,9	7500	LNK.06..
335.18 -160.1012.40-12R	A	6	160	50,2	40	55	–	15	12	12	1,5	7500	LNK.06..
R335.18 -200.1012XL.40-14R	B	6	200	53,5	40	90	50	–	14	14	2,9	6700	LNK.06..
335.18 -200.1012XL.50-14R	A	6	200	63,5	50	69	–	15	14	14	1,7	6700	LNK.06..
R335.18 -250.1012XL.40-18R	B	6	250	78	40	90	50	–	18	18	4,0	6000	LNK.06..
335.18 -250.1012XL.50-18R	A	6	250	88,5	50	69	–	15	18	18	1,8	6000	LNK.06..
335.18 -315.1012XL.50-24R	A	6	315	121	50	69	–	15	24	24	1,9	5300	LNK.06..

Please check availability in current price and stock-list

*Effective number of teeth

Cutter 335.18 - Insert LNK.

Width max 7,5 mm - half side - Right hand with cassettes

Type B for stub arbor (B)

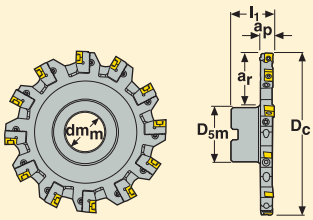

Type A for milling arbor (A)

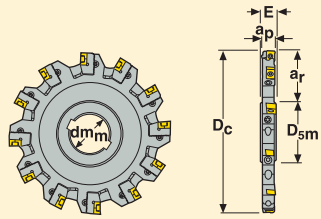

- For insert selection and cutting data recommendations, see page(s) 263-264
- For complete insert programme, see page(s) 605
- For spare parts and technical information, see page(s) 255-262

Part No.	Type of mounting	Dimensions in mm											Insert
		a_p	D_c	a_r	dm_m	D_{5m}	l_1	E		Z_c*	KG		
R335.18 -080.1215.27-6R	B	7,5	80	14,8	27	48	50	–	6	6	1,1	10500	LNK.08..
R335.18 -100.1215.27-8R	B	7,5	100	24,8	27	48	50	–	8	8	0,9	9400	LNK.08..
335.18 -100.1215.27-8R	A	7,5	100	27,2	27	41	–	15	8	8	0,5	9400	LNK.08..
R335.18 -125.1215.32-10R	B	7,5	125	32,3	32	58	50	–	10	10	1,2	8400	LNK.08..
335.18 -125.1215.40-10R	A	7,5	125	32,7	40	55	–	15	10	10	0,9	8400	LNK.08..
R335.18 -160.1215.40-12R	B	7,5	160	43,8	40	70	50	–	12	12	2,7	7500	LNK.08..
335.18 -160.1215.40-12R	A	7,5	160	50,2	40	55	–	15	12	12	1,5	7500	LNK.08..
R335.18 -200.1215XL.40-14R	B	7,5	200	53,5	40	90	50	–	14	14	3,6	6700	LNK.08..
335.18 -200.1215XL.50-14R	A	7,5	200	63,5	50	69	–	15	14	14	1,7	6700	LNK.08..
R335.18 -250.1215XL.40-18R	B	7,5	250	78	40	90	50	–	18	18	4,5	6000	LNK.08..
335.18 -250.1215XL.50-18R	A	7,5	250	88,5	50	69	–	15	18	18	2,5	6000	LNK.08..
335.18 -315.1215XL.50-24R	A	7,5	315	121	50	69	–	15	24	24	2,2	5300	LNK.08..

Please check availability in current price and stock-list

*Effective number of teeth

Cutter 335.25 - Insert XNHQ

Max depth of cut 11 mm - half side - right hand with cassettes

B type for stub arbor – (B)

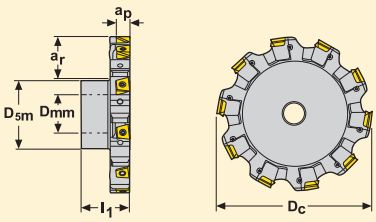

A type for milling arbor – (A)

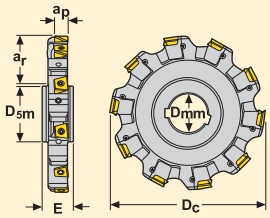

- For insert selection and cutting data recommendations, see page(s) 265-268
- For complete insert programme, see page(s) 638
- For spare parts and technical information, see page(s) 255-262

Part No.	Type of mounting	Dimensions in mm											Insert
		a_p	D_c	a_r	dm_m	D_{5m}	l_1	E		Z_c*	KG		
R335.25 -100.1317.27-6R	B	8,5	100	24,8	27	48	50	–	6	6	1,0	9200	XNHQ09..
R335.25 -125.1317.32-8R	B	8,5	125	32,3	32	58	50	–	8	8	1,4	8200	XNHQ09..
335.25 -125.1317.40-8R	A	8,5	125	32,9	40	55	–	17	8	8	1,9	8200	XNHQ09..
R335.25 -160.1317.40-12R	B	8,5	160	43,8	40	70	50	–	12	12	2,3	7200	XNHQ09..
335.25 -160.1317.40-12R	A	8,5	160	50,5	40	55	–	17	12	12	1,5	7200	XNHQ09..
R335.25 -200.1317.40-14R	B	8,5	200	54,0	40	90	50	–	14	14	3,6	6500	XNHQ09..
335.25 -200.1317.50-14R	A	8,5	200	63,5	50	69	–	17	14	14	3,1	6500	XNHQ09..
R335.25 -250.1317XL.60-16R	B	8,5	250	59,0	60	130	50	–	16	16	6,0	5800	XNHQ09..
335.25 -250.1317XL.50-16R	A	8,5	250	88,5	50	69	–	17	16	16	3,9	5800	XNHQ09..
R335.25 -315.1317XL.60-20R	B	8,5	315	91,5	60	130	50	–	20	20	8,6	5200	XNHQ09..
335.25 -315.1317XL.50-20R	A	8,5	315	121,0	50	69	–	17	20	20	6,5	5200	XNHQ09..
R335.25 -100.1721.27-6R	B	11	100	24,8	27	48	50	–	6	6	1,1	7200	XNHQ12..
R335.25 -125.1721.32-8R	B	11	125	32,3	32	58	50	–	8	8	1,6	6500	XNHQ12..
335.25 -125.1721.40-8R	A	11	125	32,9	40	55	–	21	8	8	1,0	6500	XNHQ12..
R335.25 -160.1721.40-10R	B	11	160	43,8	40	70	50	–	10	10	2,7	5700	XNHQ12..
335.25 -160.1721.40-10R	A	11	160	50,5	40	55	–	21	10	10	1,9	5700	XNHQ12..
R335.25 -200.1721.40-12R	B	11	200	54,0	40	90	50	–	12	12	4,1	5100	XNHQ12..
335.25 -200.1721.50-12R	A	11	200	63,5	50	69	–	21	12	12	3,2	5100	XNHQ12..
R335.25 -250.1721XL.60-16R	B	11	250	59,0	60	130	50	–	16	16	6,7	4600	XNHQ12..
335.25 -250.1721XL.50-16R	A	11	250	88,5	50	69	–	21	16	16	8,2	4600	XNHQ12..
R335.25 -315.1721XL.60-20R	B	11	315	91,5	60	130	50	–	20	20	10,0	4100	XNHQ12..
335.25 -315.1721XL.50-20R	A	11	315	121,0	50	69	–	21	20	20	8,2	4100	XNHQ12..

Please check availability in current price and stock-list

*Effective number of teeth

Cutter 335.25 - Insert XNHQ and LNHQ

Max depth of cut 16 mm - half side - right hand with cassettes

B type for stub arbor – (B)

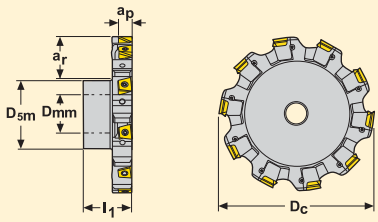

A type for milling arbor – (A)

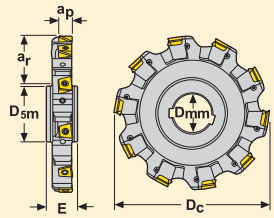

- For insert selection and cutting data recommendations, see page(s) 271-270
- For complete insert programme, see page(s) 606, 638
- For spare parts and technical information, see page(s) 255-262

Part No.	Type of mounting	Dimensions in mm a_p	D_c	a_r	dm_m	D_{5m}	l_1	E		Z_c*	KG		Insert: First choice	Insert: Alternative choice
R335.25 -125.2126.32-8R	B	13	125	32,3	32	58	50	–	8	8	1,7	4900	XNHQ1407...	LNHQ1407...
335.25 -125.2126.40-8R	A	13	125	32,7	40	55	–	32	8	8	1,3	4900	XNHQ1407...	LNHQ1407...
R335.25 -160.2126.40-10R	B	13	160	43,8	40	70	50	–	10	10	2,9	4400	XNHQ1407...	LNHQ1407...
335.25 -160.2126.40-10R	A	13	160	50,3	40	55	–	32	10	10	2,3	4400	XNHQ1407...	LNHQ1407...
R335.25 -200.2126.40-12R	B	13	200	54	40	90	50	–	12	12	4,6	3900	XNHQ1407...	LNHQ1407...
335.25 -200.2126.50-12R	A	13	200	63,3	50	69	–	32	12	12	3,9	3900	XNHQ1407...	LNHQ1407...
R335.25 -250.2126XL.60-14R	B	13	250	59	60	130	50	–	14	14	7,3	3500	XNHQ1407...	LNHQ1407...
335.25 -250.2126XL.50-14R	A	13	250	88,3	50	69	–	32	14	14	6,0	3500	XNHQ1407...	LNHQ1407...
R335.25 -315.2126XL.60-18R	B	13	315	91,5	60	130	50	–	18	18	11,3	3100	XNHQ1407...	LNHQ1407...
335.25 -315.2126XL.60-18R	A	13	315	113,3	60	84	–	32	18	18	10,0	3100	XNHQ1407...	LNHQ1407...
R335.25 -160.2632.40-10R	B	16	160	43,8	40	70	50	–	10	10	3,4	4600	XNHQ1707...	LNHQ1707...
335.25 -160.2632.40-10R	A	16	160	50,3	40	55	–	32	10	10	2,9	4600	XNHQ1707...	LNHQ1707...
R335.25 -200.2632.40-12R	B	16	200	54	40	90	50	–	12	12	5,4	4100	XNHQ1707...	LNHQ1707...
335.25 -200.2632.50-12R	A	16	200	63,3	50	69	–	32	12	12	4,8	4100	XNHQ1707...	LNHQ1707...
R335.25 -250.2632XL.60-14R	B	16	250	59	60	130	50	–	14	14	8,4	3700	XNHQ1707...	LNHQ1707...
335.25 -250.2632XL.50-14R	A	16	250	88,3	50	69	–	32	14	14	7,4	3700	XNHQ1707...	LNHQ1707...
R335.25 -315.2632XL.60-18R	B	16	315	91,5	60	130	50	–	18	18	13,4	3300	XNHQ1707...	LNHQ1707...
335.25 -315.2632XL.60-18R	A	16	315	113,3	60	84	–	32	18	18	12,3	3300	XNHQ1707...	LNHQ1707...

Please check availability in current price and stock-list

*Effective number of teeth

Cutter 335.18 - Round inserts

Width max 6 mm - Half side - Right hand - radius profile with cassette

Type B for stub arbor (B)

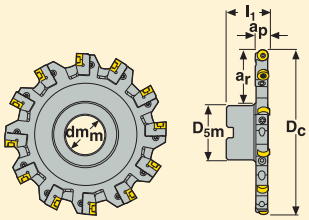

Type A for milling arbor (A)

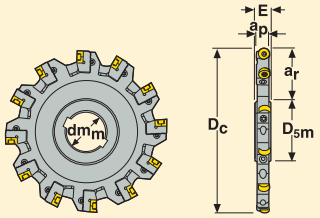

- For insert selection and cutting data recommendations, see page(s) 281-[XXX]
- For complete insert programme, see page(s) 614-615
- For spare parts and technical information, see page(s) 255-262

Part No.	Type of mounting	Dimensions in mm											Insert
		a_p	D_c	a_r	dm_m	D_{5m}	l_1	E		Z_c*	KG		
R335.18 -080.1012.27-6R-R5	B	5	82	15,8	27	48	50	–	6	6	0,8	10500	RD..10T3
R335.18 -100.1012.27-8R-R5	B	5	102	25,8	27	48	50	–	8	8	1,0	9400	RD..10T3
335.18 -100.1012.27-8R-R5	A	5	102	28,2	27	41	–	15	8	8	0,4	9400	RD..10T3
R335.18 -125.1012.32-10R-R5	B	5	127	33,3	32	58	50	–	10	10	1,2	8400	RD..10T3
335.18 -125.1012.40-10R-R5	A	5	127	33,7	40	55	–	15	10	10	0,7	8400	RD..10T3
R335.18 -160.1012.40-12R-R5	B	5	162	44,8	40	70	50	–	12	12	0,1	7500	RD..10T3
335.18 -160.1012.40-12R-R5	A	5	162	51,2	40	55	–	15	12	12	1,3	7500	RD..10T3
R335.18 -200.1012XL.40-14R-R5	B	5	200	53,5	40	90	50	–	14	14	2,9	6700	RD..10T3
335.18 -200.1012XL.50-14R-R5	A	5	200	63,5	50	69	–	15	14	14	1,7	6700	RD..10T3
R335.18 -250.1012XL.40-18R-R5	B	5	250	78	40	90	50	–	18	18	4,0	6000	RD..10T3
335.18 -250.1012XL.50-18R-R5	A	5	250	88,5	50	69	–	15	18	18	3,8	6000	RD..10T3
335.18 -315.1012XL.50-24R-R5	A	5	315	121	50	69	–	15	24	24	2,0	5300	RD..10T3
R335.18 -080.1215.27-6R-R6	B	6	82	14,8	27	48	50	–	6	6	0,7	10500	RP..1204
R335.18 -100.1215.27-8R-R6	B	6	102	25,8	27	48	50	–	8	8	1,1	9400	RP..1204
335.18 -100.1215.27-8R-R6	A	6	102	28,2	27	41	–	15	8	8	0,7	9400	RP..1204
R335.18 -125.1215.32-10R-R6	B	6	127	33,3	32	58	50	–	10	10	1,4	8400	RP..1204
335.18 -125.1215.40-10R-R6	A	6	127	33,7	40	55	–	15	10	10	0,9	8400	RP..1204
R335.18 -160.1215.40-12R-R6	B	6	162	44,8	40	70	50	–	12	12	1,9	7500	RP..1204
335.18 -160.1215.40-12R-R6	A	6	162	51,2	40	55	–	15	12	12	1,5	7500	RP..1204
R335.18 -200.1215XL.40-14R-R6	B	6	200	53,5	40	90	50	–	14	14	3,3	6700	RP..1204
335.18 -200.1215XL.50-14R-R6	A	6	200	63,5	50	69	–	15	14	14	2,0	6700	RP..1204
R335.18 -250.1215XL.40-18R-R6	B	6	250	78	40	90	50	–	18	18	4,5	6000	RP..1204
335.18 -250.1215XL.50-18R-R6	A	6	250	88,5	50	69	–	15	18	18	2,0	6000	RP..1204
335.18 -315.1215XL.50-24R-R6	A	6	315	121	50	69	–	15	24	24	5,7	5300	RP..1204

Please check availability in current price and stock-list

*Effective number of teeth

Cutter 335.18 - Round inserts

Width max 8 mm - Half side - Right hand - radius profile with cassette

Type B for stub arbor (B)

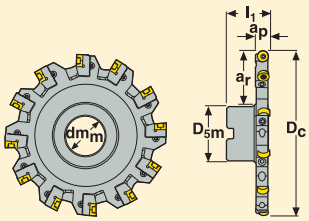

Type A for milling arbor (A)

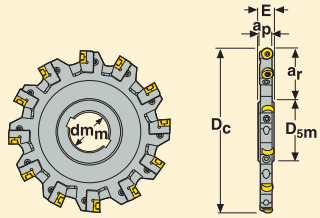

- For insert selection and cutting data recommendations, see page(s) 285-286
- For complete insert programme, see page(s) 615
- For spare parts and technical information, see page(s) 255-262

Part No.	Type of mounting	Dimensions in mm											Insert
		a_p	D_c	a_r	dm_m	D_{5m}	l_1	E		Z_c*	KG		
R335.18 -125.1418.40-8R-R8	B	8	130	26	40	70	51	–	8	8	1,4	7800	RP..1605
335.18 -125.1418.40-8R-R8	A	8	130	34,5	40	55	–	18	8	8	1,2	7800	RP..1605
R335.18 -160.1418.40-12R-R8	B	8	165	43,5	40	70	51	–	12	12	2,1	6900	RP..1605
335.18 -160.1418.40-12R-R8	A	8	165	52	40	55	–	18	12	12	1,5	6900	RP..1605
R335.18 -200.1418.40-14R-R8	B	8	205	53,5	40	90	51	–	14	14	4,1	6100	RP..1605
335.18 -200.1418.50-14R-R8	A	8	205	65	50	69	–	18	14	14	2,5	6100	RP..1605
R335.18 -250.1418.60-18R-R8	B	8	255	58,5	60	130	51	–	18	18	10,8	5500	RP..1605
335.18 -250.1418.50-18R-R8	A	8	255	90	50	69	–	18	18	18	4,1	5500	RP..1605
335.18 -315.1418.50-24R-R8	B	8	320	122,5	50	69	–	18	24	24	8,3	4900	RP..1605
R335.18 -315.1418.60-24R-R8	A	8	320	91	60	130	51	–	24	24	8,8	4900	RP..1605

Please check availability in current price and stock-list

*Effective number of teeth

Cutter 335.18 - Insert LNK.

Width max 6 mm - Half side - Left hand - with cassette

Type B for stub arbor (B)

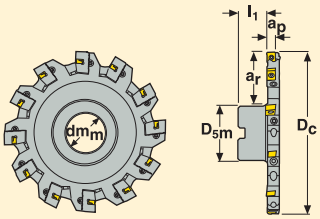

Type A for milling arbor (A)

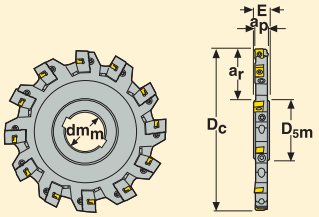

- For insert selection and cutting data recommendations, see page(s) 263-264
- For complete insert programme, see page(s) 604-605
- For spare parts and technical information, see page(s) 255-262

Part No.	Type of mounting	Dimensions in mm											Insert
		a_p	D_c	a_r	dm_m	D_{5m}	l_1	E		Z_c*	KG		
R335.18 -080.0810.27-6L	B	5	80	14,8	27	48	42	–	6	6	0,7	10500	LNK.05..
R335.18 -100.0810.27-8L	B	5	100	24,8	27	48	42	–	8	8	0,8	9400	LNK.05..
335.18 -100.0810.27-8L	A	5	100	27,2	27	41	–	15	8	8	0,4	9400	LNK.05..
R335.18 -125.0810.32-10L	B	5	125	32,3	32	58	42	–	10	10	1,0	8400	LNK.05..
335.18 -125.0810.40-10L	A	5	125	32,7	40	55	–	15	10	10	0,6	8400	LNK.05..
R335.18 -160.0810.40-12L	B	5	160	43,8	40	70	42	–	12	12	1,6	7500	LNK.05..
335.18 -160.0810.40-12L	A	5	160	50,2	40	55	–	15	12	12	1,0	7500	LNK.05..
R335.18 -200.0810XL.40-14L	B	5	200	53,5	40	90	42	–	14	14	2,7	6700	LNK.05..
335.18 -200.0810XL.50-14L	A	5	200	63,5	50	69	–	15	14	14	1,7	6700	LNK.05..
R335.18 -250.0810XL.40-18L	B	5	250	78	40	90	42	–	18	18	3,5	6000	LNK.05..
335.18 -250.0810XL.50-18L	A	5	250	88,5	50	69	–	15	18	18	1,7	6000	LNK.05..
335.18 -315.0810XL.50-24L	A	5	315	121	50	69	–	15	24	24	1,9	5300	LNK.05..
R335.18 -080.1012.27-6L	B	6	80	14,8	27	48	40	–	6	6	1,0	10500	LNK.06..
R335.18 -100.1012.27-8L	B	6	100	24,8	27	48	40	–	8	8	0,9	9400	LNK.06..
335.18 -100.1012.27-8L	A	6	100	27,2	27	41	–	15	8	8	0,4	9400	LNK.06..
R335.18 -125.1012.32-10L	B	6	125	32,3	32	58	40	–	10	10	1,0	8400	LNK.06..
335.18 -125.1012.40-10L	A	6	125	32,7	40	55	–	15	10	10	0,8	8400	LNK.06..
R335.18 -160.1012.40-12L	B	6	160	43,8	40	70	40	–	12	12	1,3	7500	LNK.06..
335.18 -160.1012.40-12L	A	6	160	50,2	40	55	–	15	12	12	1,5	7500	LNK.06..
R335.18 -200.1012XL.40-14L	B	6	200	53,5	40	90	40	–	14	14	2,9	6700	LNK.06..
335.18 -200.1012XL.50-14L	A	6	200	63,5	50	69	–	15	14	14	1,7	6700	LNK.06..
R335.18 -250.1012XL.40-18L	B	6	250	78	40	90	40	–	18	18	3,9	6000	LNK.06..
335.18 -250.1012XL.50-18L	A	6	250	88,5	50	69	–	15	18	18	1,8	6000	LNK.06..
335.18 -315.1012XL.50-24L	A	6	315	121	50	69	–	15	24	24	2,0	5300	LNK.06..

Please check availability in current price and stock-list

*Effective number of teeth

Cutter 335.18 - Insert LNK.

Width max 7,5 mm - Half side - Left hand - with cassette

Type B for stub arbor (B)

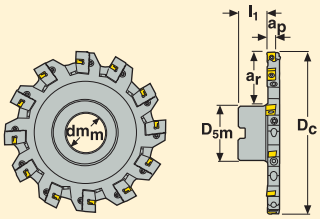

Type A for milling arbor (A)

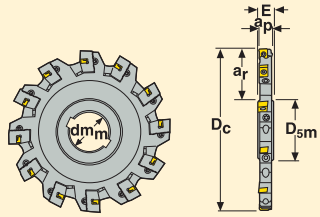

- For insert selection and cutting data recommendations, see page(s) 263-264
- For complete insert programme, see page(s) 605
- For spare parts and technical information, see page(s) 255-262

Part No.	Type of mounting	Dimensions in mm											Insert
		a_p	D_c	a_r	dm_m	D_{5m}	l_1	E		Z_c*	KG		
R335.18 -080.1215.27-6L	B	7,5	80	14,8	27	48	38	–	6	6	0,8	10500	LNK.08..
R335.18 -100.1215.27-8L	B	7,5	100	24,8	27	48	38	–	8	8	1,1	9400	LNK.08..
335.18 -100.1215.27-8L	A	7,5	100	27,2	27	41	–	15	8	8	0,6	9400	LNK.08..
R335.18 -125.1215.32-10L	B	7,5	125	33,3	32	58	38	–	10	10	1,0	8400	LNK.08..
335.18 -125.1215.40-10L	A	7,5	125	32,7	40	55	–	15	10	10	0,9	8400	LNK.08..
R335.18 -160.1215.40-12L	B	7,5	160	43,8	40	70	38	–	12	12	2,1	7500	LNK.08..
335.18 -160.1215.40-12L	A	7,5	160	50,2	40	55	–	15	12	12	1,4	7500	LNK.08..
R335.18 -200.1215XL.40-14L	B	7,5	200	53,5	40	90	38	–	14	14	3,5	6700	LNK.08..
335.18 -200.1215XL.50-14L	A	7,5	200	63,5	50	69	–	15	14	14	2,0	6700	LNK.08..
R335.18 -250.1215XL.40-18L	B	7,5	250	78	40	90	90	–	18	18	4,5	6000	LNK.08..
335.18 -250.1215XL.50-18L	A	7,5	250	88,5	50	69	–	15	18	18	3,2	6000	LNK.08..
335.18 -315.1215XL.50-24L	A	7,5	315	121	50	69	–	15	24	24	5,6	5300	LNK.08..

Please check availability in current price and stock-list

*Effective number of teeth

Cutter 335.25 - Insert XNHQ

Max depth of cut 11 mm – Half side – Left hand with cassette

Type B for stub arbor (B)

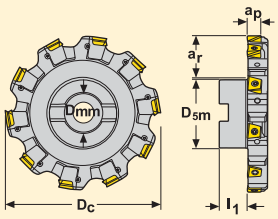

Type A for milling arbor (A)

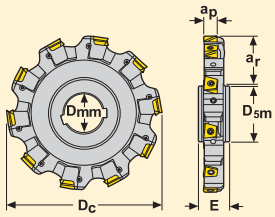

- For insert selection and cutting data recommendations, see page(s) 265-268
- For complete insert programme, see page(s) 638
- For spare parts and technical information, see page(s) 255-262

Part No.	Type of mounting	Dimensions in mm											Insert
		a_p	D_c	a_r	dm_m	D_{5m}	l_1	E		Z_c*	KG		
R335.25 -100.1317.27-6L	B	8,5	100	24,8	27	48	50	–	6	6	1,0	9200	XNHQ09..
R335.25 -125.1317.32-8L	B	8,5	125	32,3	32	58	50	–	8	8	1,4	8200	XNHQ09..
335.25 -125.1317.40-8L	A	8,5	125	32,9	40	55	–	17	8	8	0,9	8200	XNHQ09..
R335.25 -160.1317.40-12L	B	8,5	160	43,8	40	70	50	–	12	12	2,3	7200	XNHQ09..
335.25 -160.1317.40-12L	A	8,5	160	50,5	40	55	–	17	12	12	1,5	7200	XNHQ09..
R335.25 -200.1317.40-14L	B	8,5	200	54,0	40	90	50	–	14	14	3,6	6500	XNHQ09..
335.25 -200.1317.50-14L	A	8,5	200	63,5	50	69	–	17	14	14	3,1	6500	XNHQ09..
R335.25 -250.1317XL.60-16L	B	8,5	250	59,0	60	130	50	–	16	16	6,0	5800	XNHQ09..
335.25 -250.1317XL.50-16L	A	8,5	250	88,5	50	69	–	17	16	16	3,9	5800	XNHQ09..
R335.25 -315.1317XL.60-20L	B	8,5	315	91,5	60	130	50	–	20	20	8,6	5200	XNHQ09..
335.25 -315.1317XL.50-20L	A	8,5	315	121,0	50	69	–	17	20	20	6,5	5200	XNHQ09..
R335.25 -100.1721.27-6L	B	11	100	24,8	27	48	50	–	6	6	1,1	7200	XNHQ12..
R335.25 -125.1721.32-8L	B	11	125	32,3	32	58	50	–	8	8	1,6	6500	XNHQ12..
335.25 -125.1721.40-8L	A	11	125	32,9	40	55	–	21	8	8	1,1	6500	XNHQ12..
R335.25 -160.1721.40-10L	B	11	160	43,8	40	70	50	–	10	10	2,7	5700	XNHQ12..
335.25 -160.1721.40-10L	A	11	160	50,5	40	55	–	21	10	10	1,9	5700	XNHQ12..
R335.25 -200.1721.40-12L	B	11	200	54,0	40	90	50	–	12	12	4,1	5100	XNHQ12..
335.25 -200.1721.50-12L	A	11	200	63,5	50	69	–	21	12	12	3,3	5100	XNHQ12..
R335.25 -250.1721XL.60-16L	B	11	250	59,0	60	130	50	–	16	16	6,7	4600	XNHQ12..
335.25 -250.1721XL.50-16L	A	11	250	88,5	50	69	–	21	16	16	4,9	4600	XNHQ12..
R335.25 -315.1721XL.60-20L	B	11	315	91,5	60	130	50	–	20	20	10,0	4100	XNHQ12..
335.25 -315.1721XL.50-20L	A	11	315	121,0	50	69	–	21	20	20	8,2	4100	XNHQ12..

Please check availability in current price and stock-list

*Effective number of teeth

Cutter 335.25 - Insert XNHQ and LNHQ

Max depth of cut 16 mm – Half side – Left hand with cassette

Type B for stub arbor (B)

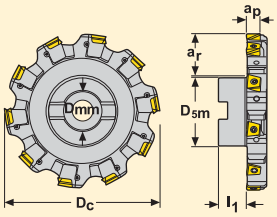

Type A for milling arbor (A)

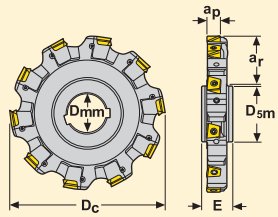

- For insert selection and cutting data recommendations, see page(s) 271-270
- For complete insert programme, see page(s) 606, 638
- For spare parts and technical information, see page(s) 255-262

Part No.	Type of mounting	Dimensions in mm								Z_c*	KG		Insert: First choice	Insert: Alternative choice
		a_p	D_c	a_r	dm_m	D_{5m}	l_1	E						
R335.25 -125.2126.32-8L	B	13	125	32,3	32	58	29	–	8	8	1,7	4900	XNHQ1407...	LNHQ1407...
335.25 -125.2126.40-8L	A	13	125	32,7	40	55	–	32	8	8	1,3	4900	XNHQ1407...	LNHQ1407...
R335.25 -160.2126.40-10L	B	13	160	43,8	40	70	29	–	10	10	2,9	4400	XNHQ1407...	LNHQ1407...
335.25 -160.2126.40-10L	A	13	160	50,3	40	55	–	32	10	10	2,3	4400	XNHQ1407...	LNHQ1407...
R335.25 -200.2126.40-12L	B	13	200	54	40	90	29	–	12	12	4,6	3900	XNHQ1407...	LNHQ1407...
335.25 -200.2126.50-12L	A	13	200	63,3	50	69	–	32	12	12	3,9	3900	XNHQ1407...	LNHQ1407...
R335.25 -250.2126XL.60-14L	B	13	250	59	60	130	29	–	14	14	7,3	3500	XNHQ1407...	LNHQ1407...
335.25 -250.2126XL.50-14L	A	13	250	88,3	50	69	–	32	14	14	6,0	3500	XNHQ1407...	LNHQ1407...
R335.25 -315.2126XL.60-18L	B	13	315	91,5	60	130	29	–	18	18	11,3	3100	XNHQ1407...	LNHQ1407...
335.25 -315.2126XL.60-18L	A	13	315	113,3	60	84	–	32	18	18	10,0	3100	XNHQ1407...	LNHQ1407...
R335.25 -160.2632.40-10L	B	16	160	43,8	40	70	24	–	10	10	3,4	4600	XNHQ1707...	LNHQ1707...
335.25 -160.2632.40-10L	A	16	160	50,3	40	55	–	32	10	10	2,9	4600	XNHQ1707...	LNHQ1707...
R335.25 -200.2632.40-12L	B	16	200	54	40	90	24	–	12	12	5,4	4100	XNHQ1707...	LNHQ1707...
335.25 -200.2632.50-12L	A	16	200	63,3	50	69	–	32	12	12	4,8	4100	XNHQ1707...	LNHQ1707...
R335.25 -250.2632XL.60-14L	B	16	250	59	60	130	24	–	14	14	8,4	3700	XNHQ1707...	LNHQ1707...
335.25 -250.2632XL.50-14L	A	16	250	88,3	50	69	–	32	14	14	7,4	3700	XNHQ1707...	LNHQ1707...
R335.25 -315.2632XL.60-18L	B	16	315	91,5	60	130	24	–	18	18	13,4	3300	XNHQ1707...	LNHQ1707...
335.25 -315.2632XL.60-18L	A	16	315	113,3	60	84	–	32	18	18	12,3	3300	XNHQ1707...	LNHQ1707...

Please check availability in current price and stock-list

*Effective number of teeth

Cutter 335.18 - Round inserts

Width max 6 mm - Half side - Left hand - radius profile with cassette

Type B for stub arbor (B)

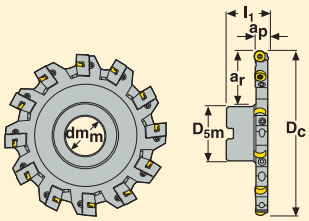

Type A for milling arbor (A)

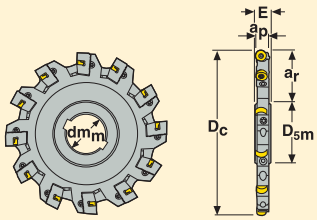

- For insert selection and cutting data recommendations, see page(s) 281-[XXX]
- For complete insert programme, see page(s) 614, 615
- For spare parts and technical information, see page(s) 255-262

Part No.	Type of mounting	Dimensions in mm											Insert
		a_p	D_c	a_r	dm_m	D_{5m}	l_1	E		Z_c*	KG		
R335.18 -080.1012.27-6L-R5	B	5	82	15,8	27	48	40	–	6	6	0,8	10500	RD..10T3
R335.18 -100.1012.27-8L-R5	B	5	102	25,8	27	48	40	–	8	8	1,0	9400	RD..10T3
335.18 -100.1012.27-8L-R5	A	5	102	28,2	27	41	–	15	8	8	0,4	9400	RD..10T3
R335.18 -125.1012.32-10L-R5	B	5	127	33,3	32	58	42	–	10	10	1,2	8400	RD..10T3
335.18 -125.1012.40-10L-R5	A	5	127	33,7	40	55	–	15	10	10	0,8	8400	RD..10T3
R335.18 -160.1012.40-12L-R5	B	5	162	44,8	40	70	40	–	12	12	2,3	7500	RD..10T3
335.18 -160.1012.40-12L-R5	A	5	162	51,2	40	55	–	15	12	12	11,0	7500	RD..10T3
R335.18 -200.1012XL.40-14L-R5	B	5	200	53,5	40	90	40	–	14	14	2,9	6700	RD..10T3
335.18 -200.1012XL.50-14L-R5	A	5	200	63,5	50	69	–	15	14	14	1,7	6700	RD..10T3
R335.18 -250.1012XL.40-18L-R5	B	5	250	78	40	90	40	–	18	18	4,0	6000	RD..10T3
335.18 -250.1012XL.50-18L-R5	A	5	250	88,5	50	69	–	15	18	18	1,8	6000	RD..10T3
335.18 -315.1012XL.50-24L-R5	A	5	315	121	50	69	–	15	24	24	2,0	5300	RD..10T3
R335.18 -080.1215.27-6L-R6	B	6	82	15,8	27	48	38	–	6	6	0,7	10500	RP..1204
R335.18 -100.1215.27-8L-R6	B	6	102	25,8	27	48	38	–	8	8	1,1	9400	RP..1204
335.18 -100.1215.27-8L-R6	A	6	102	28,2	27	41	–	15	8	8	0,6	9400	RP..1204
R335.18 -125.1215.32-10L-R6	B	6	127	32,3	32	58	38	–	10	10	1,1	8400	RP..1204
335.18 -125.1215.40-10L-R6	A	6	127	33,7	40	55	–	15	10	10	0,9	8400	RP..1204
R335.18 -160.1215.40-12L-R6	B	6	162	44,8	40	70	38	–	12	12	2,0	7500	RP..1204
335.18 -160.1215.40-12L-R6	A	6	162	51,2	40	55	–	15	12	12	1,5	7500	RP..1204
R335.18 -200.1215XL.40-14L-R6	B	6	200	53,5	40	90	38	–	14	14	3,3	6700	RP..1204
335.18 -200.1215XL.50-14L-R6	A	6	200	63,5	50	69	–	15	14	14	1,9	6700	RP..1204
R335.18 -250.1215XL.40-18L-R6	B	6	250	78	40	90	38	–	18	18	4,6	6000	RP..1204
335.18 -250.1215XL.50-18L-R6	A	6	250	88,5	50	69	–	15	18	18	2,0	6000	RP..1204
335.18 -315.1215XL.50-24L-R6	A	6	315	121	50	69	–	15	24	24	2,2	5300	RP..1204

Please check availability in current price and stock-list

*Effective number of teeth

Cutter 335.18 - Round inserts

Width max 8 mm - Half side - Left hand - radius profile with cassette

Type B for stub arbor (B)

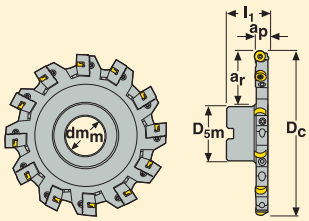

Type A for milling arbor (A)

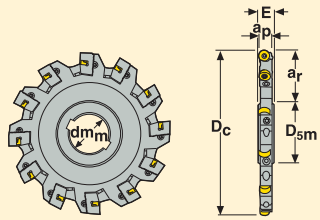

- For insert selection and cutting data recommendations, see page(s) 285-286
- For complete insert programme, see page(s) 615
- For spare parts and technical information, see page(s) 255-262

Part No.	Type of mounting	Dimensions in mm								Z_c*	KG		Insert
		a_p	D_c	a_r	dm_m	D_{5m}	l_1	E					
R335.18 -125.1418.40-8L-R8	B	8	130	26	40	70	35	–	8	8	1,4	7800	RP..1605
335.18 -125.1418.40-8L-R8	A	8	130	34,5	40	55	–	18	8	8	1,2	7800	RP..1605
R335.18 -160.1418.40-12L-R8	B	8	165	43,5	40	70	35	–	12	12	2,1	6900	RP..1605
335.18 -160.1418.40-12L-R8	A	8	165	52	40	55	–	18	12	12	1,0	6900	RP..1605
R335.18 -200.1418.40-14L-R8	B	8	205	53,5	40	90	35	–	14	14	4,1	6100	RP..1605
335.18 -200.1418.50-14L-R8	A	8	205	65	50	69	–	18	14	14	2,5	6100	RP..1605
R335.18 -250.1418.60-18L-R8	B	8	255	58,5	60	130	35	–	18	18	10,8	5500	RP..1605
335.18 -250.1418.50-18L-R8	A	8	255	90	50	69	–	18	18	18	4,2	5500	RP..1605
R335.18 -315.1418.60-24L-R8	B	8	320	91	60	130	35	–	24	24	8,8	4900	RP..1605
335.18 -315.1418.50-24L-R8	A	8	320	122,5	50	69	–	18	24	24	6,8	4900	RP..1605

Please check availability in current price and stock-list

*Effective number of teeth

Spare parts for (R)335.18/(R)335.29 - Fixed pocket

Cutter family	Width of cut	Insert type	Insert locking screw/Nm	Key for insert locking screw	Indexing screw	Key for indexing screw
(R)335.18	8	LNK.05...	C02508-T08P / 1.2Nm	T08P-3	–	–
	10, 17	LNK.06...	C73007-T09P / 2.0Nm	T09P-3	–	–
	12, 14, 20	LNK.08...	C73007-T09P / 2.0Nm	T09P-3	–	–
(R)335.29	5	RD..05...	C02035-T06P / 0.5Nm	T06P-3	–	–
	6	RD..06...	C02205-T07P / 0.9Nm	T07P-3	–	–
	7	RD..07...	C02545-T07P / 0.9Nm	T07P-3	–	–
	8	RD..08...	C02506-T08P / 1.2Nm	T08P-3	–	–
	10	RD..10...	C03007-T09P / 2.0Nm	T09P-3	–	–
	12	RP..12...	C03508-T15P / 3.0Nm	T15P-3	SX2035-T05P	T05P-2

Spare parts for (R)335.18 -LNK and round insert - Adjustable design

For cutter (R)335.18-xxx-	Insert type	Insert locking screw/Nm	Key for insert locking screw	Wedge	Wedge screw	Key for wedge screw	Adjusting screw	Key for adjusting screw	Cassettes Right R335.18-...	Cassettes Left L335.18-...
0810	LN.K05...	C02508-T08P/ 1,2Nm	T08P-3	335.18-607	LD5018F-T15P	T15P-3	SH6004-T08P	T08P-3	...0810-05	...0810-05
0810XL				335.18-XL607					...0810XL-05	...0810XL-05
0810	RD..08..	C02506-T08P/ 1,2Nm	T08P-3	335.18-607	LD5018F-T15P	T15P-3	SH6004-T08P		N335.18-08-R4	
0810XL				335.18-XL607					N335.18-08XL-R4	
1012	LNK.06..	C73007-T09P/ 2,0Nm	T09P-3	335.18-609	LD6018F-T20P	T20P-4	SH6005-T09P	T09P-3	...1012-06	...1012-06
1012XL				335.18-XL609					...1012XL-06	...1012XL-06
1012	RD..10T3	C03007-T09P/ 2,0Nm	T09P-3	335.18-609	LD6018F-T20P	T20P-4	SH6005-T09P		...10-R5	...10-R5
1012XL				335.18-XL609					...10XL-R5	...10XL-R5
1215	LNK08..	C73007-T09P/ 2,0Nm	T09P-3	335.18-611	LD6018F-T20P	T20P-4	SH6005-T09P	T09P-3	...1215-08	...1215-08
1215XL				335.18-XL611					...1215XL-08	...1215XL-08
1215	RP..12..	C03508-T15P/ 3,0 Nm	T15P-3	335.18-611	LD6018F-T20P	T20P-4	SH6005-T09P		...12-R6	...12-R6
1215XL				335.18-XL611					...12XL-R6	...12XL-R6
1416 &1418	335.18-1005	C04011-T15P/ 3,5Nm	T15P-3	335.18-613F	LD6018F-T20P	T20P-3	SH6005-T09P	T09P-3	...1418	...1418
1418	RP..16..	C05010-T20P/ 5,0Nm	T20P-4						...16-R8-D5	...16-R8-D5
1820 & 1924	335.18-1305	C04011-T15P/ 3,5Nm	T15P-3	335.18-617M	268-650	4SMS795	SH6005-T09P	T09P-3	...1924	...1924
1924	AC..15	C45011-T20P/ 5,0Nm	T20P-4						...2024-15H	...2024-15H

Note for 335.18 adjustable 1416 & 1418 series: please use wedge 335.18- 613M and wedge screw LD6018 for old cutter bodies having tapped holes for wedge screw with standard pitch =1mm. Torque key, see page

Spare parts for (R)335.18 -LNK and round insert - Adjustable design

For cutter R335.18	Insert type	Locking screw/Nm	Key	Wedge	Wedge screw	Key for wedge screw	Adjusting screw	Key for adjusting screw	Cassettes	
									Right R335.18-...	Left L335.18-...
1416 &1418	335.18-1005	C04011-T15P/ 3,5N	T15P-3	335.18-613F	LD6018F-T20P	T20P-3	SH6005-T09P	T09P-3	...1418	...1418
1418	RP..16..	C05010-T20P/ 5,0N	T20P-4						...16-R8-D5	...16-R8-D5
1820 & 1924	335.18-1305	C04011-T15P/ 3,5N	T15P-3	335.18-617M	268-650	4SMS795	SH6005-T09P	T09P-3	...1924	...1924
1924	AC..15	C45011-T20P/ 5,0N	T20P-4						...2024-15H	...2024-15H

Cassettes for wiper insert - 335.18 disc milling cutters: “1418”, “1924” & “2530” series

For slot width (ap) mm	Cassette right	Cassette left	Wiper insert
	Part No.	Part No.	Part No.
14 - 17	R335.18-1418F	L335.18-1418F	335.18-1005ZZ
14 - 18,5	R335.18-1418F	L335.18-1418F	335.18-1005ZZ
18,5 - 21	R335.18-1924F	L335.18-1924F	335.18-1005ZZ
18,5 - 24,3	R335.18-1924F	L335.18-1924F	335.18-1005ZZ
24,3 - 30,5	R335.18-2530F	L335.18-2530F	335.18-1005ZZ

When high surface finish is required it is possible to use wiper inserts, type 335.18-1005ZZ.

For full side and face version use one right hand and one left hand cassette mounted at 180°. The cassette must be adjusted 0,05 mm outside the other cassettes.

Spare parts for previous generation of (R)335.18 - Adjustable design

Body	Width 1418 and 1416		Width 1820 and1924		Width 2530	
	Old design	New design	Old design	New design	Old design	New design
Adjusting screw	SH6007	SH6005-T09P	SH6007	SH6005-T09P	SH8012	SH6005-T09P
Key for adjusting screw	3SMS795	T09P-3	3SMS795	T09P-3	4SMS795	T09P-3

Old design

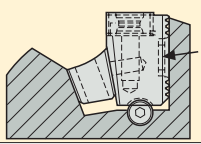

New design

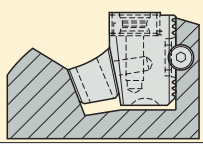

Spare parts for fixed pockets and adjustable cutter (R)335.25

For fixed pocket cutter	Insert type	Locking screw/Nm	Key
15 mm	XNHQ09	C03509-T10P/3 Nm	T10P-3
20 mm	XNHQ12	C03511-T10P/3 Nm	T10P-3
25 mm	XNHQ14/ LNHQ14	C04013-T15P/5 Nm	T15P-4

For adjustable cutter	Insert type	Locking screw/Nm	Key	Wedge	Wedge screw	Key for wedge screw	Adjusting screw	Key for adjusting screw	Cassettes	
									Right R335.25-...	Left L335.25-...
1317	XNHQ09	C03509-T10P/3Nm	T10P-3	335.25-612	LD6018F-T20P	T20P-4	SH6005-T09P	T09P-3	1317-09*	1317-09*
1317XL									1317XL-09	1317XL-09
1721	XNHQ12	C03511-T10P/3Nm	T10P-3	335.25-616	LD6018F-T20P	T20P-4	SH6005-T09P	T09P-3	1721-12**	1721-12**
1721XL									1721XL-12	1721XL-12
2126	XNHQ14 / LNHQ14	C04013-T15P/5 Nm	T15P-4	335.25-620	LD6018F-T20P	T20P-4	SH6005-T09P	T09P-3	2126-14***	2126-14***
2126XL									2126XL-14	2126XL-14
2632	XNHQ17 / LNHQ17	C05013-T20P/5 Nm	T20P-4	335.25-625	LD6018F-T20P	T20P-4	SH6005-T09P	T09P-3	2632-17****	2632-17****
2632XL									2632XL-17	2632XL-17

*Cassette compatible with adjustable disc milling cutter x335.18-xxx-1418 series to generate width of cut from 14 to 17 mm, generating nominal "D_c" diameter
**Cassette compatible with adjustable disc milling cutter x335.18-xxx-1924 series to generate width of cut from 18.5 to 21 mm, generating nominal "D_c" diameter
***Cassette compatible with adjustable disc milling cutter x335.18-xxx-2530 series to generate width of cut from 24,3 to 26 mm, generating nominal "D_c" diameter
**** Cassette compatible with adjustable disc milling cutter x335.18-xxx-2530 series to generate width of cut from 26 to 30,5 mm, generating nominal "D_c" diameter

Arbor screw for B type cutter

Fixed pocket cutter	Arbor screw	dm_m
80	MLC6S10X45	22
100	MC6S12X40	27
125	950E1645	32
160	MLC6S20X40	40

Adjustable cutter	Arbor screw	dm_m
100	MC6S12X40	27
125	MC6S16X40	32
160	MLC6S20X40	40

Dimension of mounting: See Machining Navigator 2015 Milling - Page 247

Retaining screw B type: R335.18 / R335.25 / R335.29 (supplied with the cutter in the delivery)

For cutter dia	Cutter 335.18 - fixed pocket	Cutter 335.18 adj. “0810”, “1012”, “1215” series	Cutter 335.25 - fixed pocket	Cutter 335.25 - adj.	Cutter 335.29
63	MC6S 10x40	MC6S 10x40	-	-	MC6S 10x40
80	MC6S 12x40	MC6S 12x40	-	-	MC6S 12x35
100	MC6S 12x40	MC6S 12x40	-	-	-
125	-	-	950E1645	MC6S16X40	-
160	-	-	MLC6S20X40	MLC6S20X40	-

Note: For disc cutter not mentioned in the table above, please use cross head retaining screw, supplied with the Seco-EPB shell mill holder

To order a standard adjustable disc milling cutter set at a specific width

To order a standard adjustable disc mill 335.18 full side set to a specific width.

To obtain an adjustable disc mill set to your required dimension add “/ADJ” at the end of the reference and specify your required width which will be set with a tolerance of +/- 0,03 mm. Without specification the standard disc mill is set to the minimum cutting width.

Ordering example: 335.18-200-2530.50-6N-16C/ADJ and specify on your order your width to any value within its range, for example specify a cutting width of 27,35 mm in your order. The disc mill will be set to 27,35 +/- 0,03 mm.

The delivery time is approx. 3 days for a set adjustable disc mill.

Dimension of mounting B type - R335.18 / R335.25 / R335.29

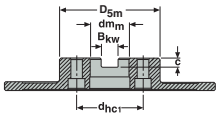

Dimensions in mm				
dm_m	D_{5m}	d_{hc1}	B_{kw}	c
22	40	-	10,4	6,3
27	48	-	12,4	7
32	58	-	14,4	8
40	70	-	16,4	9
40	90	66,7	16,4	9
60	130	101,6	25,7	14

Dimension of mounting A type -Keyway dimension - 335.18 / 335.25

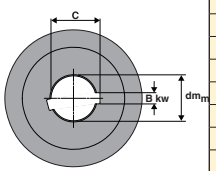

Dimensions in mm		
dm_m	B_{kw}	c
22	6	24,15
27	7	29,9
40	10	43,6
50	12	53,6
60	14	64,3

LNK 05/06/08 inserts

LNK.05
For width 8-10

LNK.06
For width 10-12

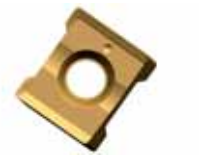

LNK.08
For width 12-15

LNK.06 and LNK.08 have the same size, but LNK.06 have a reduced cutting length (6mm) to decrease cutting forces for a_p = 10-12 mm.
LNK.08 have a cutting length = 7,5 mm for width 12-15 mm.

Radius possibilities/Number of cutting edges

		R	Fixed pocket version: a_p =						Adjustable version: a_p =			
			8	10	12	14	17	20	8	10	12	15
4 cutting edges												
	LNK.050404	0,4	x	x					x	x		
	LNK.050408	0,8	x	x					x	x		
	LNK.050416	1,6	x	x					x	x		
	LNK.050420	2,0	x	x					x	x		
	LNK.060504	0,4		x	x		x			x	x	
	LNK.060508	0,8		x	x		x			x	x	
	LNK.060516	1,6		x	x		x			x	x	
	LNK.080504	0,4		o	o	x	o	x		o	o	x
	LNK.080508	0,8		o	o	x	o	x		o	o	x
	LNK.080516	1,6		o	o	x	o	x		o	o	x
	LNK.080520	2,0		x	x	x	x	x		x	x	x
	LNK.080524	2,4		x	x	x	x	x		x	x	x
2 cutting edges												
	LNK.050424	2,4	x	x					x	x		
	LNK.060531	3,1		x	x		x			x	x	
	LNK.080531	3,1			o	x	o	x			o	x
1 cutting edge (L and R insert)												
	LNK.050431	3,1	x	x					x	x		
	LNK.060540	4,0		x	x		x			x	x	
	LNK.080540	4,0			o	x	o	x			o	x

x = First choice o = Alternative choice

Width and profile generated with LNK.06/08 radii R1,6/R2,0 and R2,4

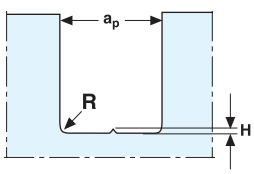

ap (mm)	H (mm)	
	Radius 1,6	Radii 2 and 2,4
13,4	–	0
14	–	0,03
14,2	0	0,07
14,5	0,01	0,13
15	0,1	0,3

Width and profile generated by XNHQ insert with fixed pocket cutter a_p = 15/20/25mm

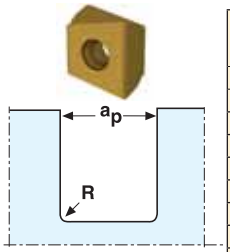

Insert corner radius	a_p = 15mm	a_p = 20mm	a_p = 25mm
0,4	15	20	25
0,8	15	20	25
1,2	15	20	25
1,6	15	20	25
2	15	20	25
2,4	15	20	25
3,1	14,86	20	25
4	14,6	19,78	25
5	–	19,46	24,73
6	–	–	24,46

Width and profile generated by LNHQ* insert with fixed pocket cutter a_p = 25mm

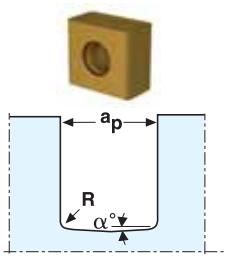

Insert corner radius	a_p generated	angle α°
0,8	25,17	2
3,1	25,02	2
4	24,92	2
5	24,78	2
6	24,64	2

*LNHQ is an insert intended for roughing in difficult conditions (this will not generate a flat bottom).

Width and profile generated with XNHQ 14 and 17 insert, radii 5 and 6 mm, with adjustable cutter

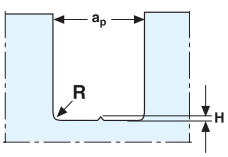

Width cutter	a_p mm	H (mm)	
		Radius 5	Radius 6
21-26	25,5	0	0
21-26	25,8	0	0,01
21-26	26,0	0,01	0,03
26-32	31,7	0	0
26-32	32,0	0	0,01

Profile machined with adjustable 335.18 cutter equipped with round inserts

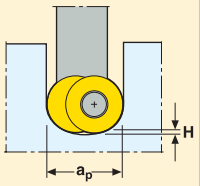

a_p min

a_p max

Round 8	
a_p mm	Profile height H mm
8,03	0
8,50	0
9,00	0,03
9,50	0,07
10,00	0,13
Recom. min setting width is 8,03 mm	

Round 10	
a_p mm	Profile height H mm
10,03	0
10,50	0
11,00	0,025
11,50	0,060
12,00	0,100
Recom. min setting width is 10,03 mm	

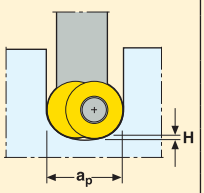

a_p min

a_p max

Round 12	
a_p mm	Profile height H mm
12,03	0
12,50	0,01
13,00	0,02
14,00	0,08
15,00	0,19
Recom. min setting width is 12,03 mm	

Round 16	
a_p mm	Profile height H mm
16,03	0
16,50	0
17,00	0,02
18,00	0,06
18,50	0,10
Recom. min setting width is 16,03 mm	

335.18 LNK. - Insert selection

SMG				f_z		
				30%	20%	10%
P1	LNKT05...-M06 F40M	LNKT06...-M06 F40M	LNKT08...-M06 F40M	0,12	0,14	0,19
P2	LNKT05...-M06 F40M	LNKT06...-M06 F40M	LNKT08...-M06 F40M	0,13	0,14	0,19
P3	LNKT05...-M06 F40M	LNKT06...-M06 F40M	LNKT08...-M06 F40M	0,12	0,14	0,18
P4	LNKT05...-M06 F40M	LNKT06...-M06 F40M	LNKT08...-M06 F40M	0,12	0,13	0,18
P5	LNKT05...-M06 F40M	LNKT06...-M06 F40M	LNKT08...-M06 F40M	0,11	0,13	0,17
P6	LNKT05...-M06 F40M	LNKT06...-M06 F40M	LNKT08...-M06 F40M	0,11	0,13	0,17
P7	LNKT05...-M06 MP3000	LNKT06...-M06 MP2500	LNKT08...-M06 MP2500	0,11	0,13	0,17
P8	LNKT05...-M06 MP3000	LNKT06...-M06 MP2500	LNKT08...-M06 MP2500	0,12	0,14	0,18
P11	LNKT05...-M06 F40M	LNKT06...-M06 F40M	LNKT08...-M06 F40M	0,11	0,13	0,17
M1	LNKT05...-M06 F40M	LNKT06...-M06 F40M	LNKT08...-M06 F40M	0,13	0,14	0,19
M2	LNKT05...-M06 F40M	LNKT06...-M06 F40M	LNKT08...-M06 F40M	0,11	0,13	0,17
M3	LNKT05...-M06 F40M	LNKT06...-M06 F40M	LNKT08...-M06 F40M	0,090	0,10	0,14
M4	LNKT05...-M06 F40M	LNKT06...-M06 F40M	LNKT08...-M06 F40M	0,080	0,090	0,12
M5	LNKT05...-M06 F40M	LNKT06...-M06 F40M	LNKT08...-M06 F40M	0,080	0,090	0,12
K1	LNKT05...-M06 MP3000	LNKT06...-M06 MK2050	LNKT08...-M06 MK2050	0,13	0,14	0,19
K2	LNKT05...-M06 MP3000	LNKT06...-M06 MK2050	LNKT08...-M06 MK2050	0,11	0,13	0,17
K3	LNKT05...-M06 MP3000	LNKT06...-M06 MK2050	LNKT08...-M06 MK2050	0,11	0,13	0,17
K4	LNKT05...-M06 MP3000	LNKT06...-M06 MK2050	LNKT08...-M06 MK2050	0,11	0,13	0,17
K5	LNKT05...-M06 MP3000	LNKT06...-M06 MK2050	LNKT08...-M06 MK2050	0,10	0,12	0,16
K6	LNKT05...-M06 MP3000	LNKT06...-M06 MK2050	LNKT08...-M06 MK2050	0,11	0,13	0,17
K7	LNKT05...-M06 MP3000	LNKT06...-M06 MK2050	LNKT08...-M06 MK2050	0,10	0,12	0,16
N1	LNKT05...-E05 H25	LNKT06...-E05 H25	LNKT08...-E05 H25	0,14	0,16	0,22
N2	LNKT05...-E05 H25	LNKT06...-E05 H25	LNKT08...-E05 H25	0,14	0,16	0,22
N3	LNKT05...-E05 H25	LNKT06...-E05 H25	LNKT08...-E05 H25	0,14	0,16	0,22
N11	LNKT05...-E05 H25	LNKT06...-E05 H25	LNKT08...-E05 H25	0,14	0,16	0,22
S1	LNKT05...-M06 F40M	LNKT06...-M06 F40M	LNKT08...-M06 F40M	0,080	0,090	0,12
S2	LNKT05...-M06 F40M	LNKT06...-M06 F40M	LNKT08...-M06 F40M	0,080	0,090	0,12
S3	LNKT05...-M06 F40M	LNKT06...-M06 F40M	LNKT08...-M06 F40M	0,075	0,085	0,11
S11	LNKT05...-M06 F40M	LNKT06...-M06 F40M	LNKT08...-M06 F40M	0,090	0,10	0,14
S12	LNKT05...-M06 F40M	LNKT06...-M06 F40M	LNKT08...-M06 F40M	0,090	0,10	0,14
S13	LNKT05...-M06 F40M	LNKT06...-M06 F40M	LNKT08...-M06 F40M	0,080	0,090	0,12
H5	LNKT05...-M06 MP3000	LNKT06...-M06 MP2500	LNKT08...-M06 MP2500	0,075	0,090	0,12
H8	LNKT05...-M06 MP3000	LNKT06...-M06 MP2500	LNKT08...-M06 MP2500	0,060	0,070	0,090
H11	LNKT05...-M06 MP3000	LNKT06...-M06 MP2500	LNKT08...-M06 MP2500	0,075	0,090	0,12
H12	LNKT05...-M06 MP3000	LNKT06...-M06 MP2500	LNKT08...-M06 MP2500	0,075	0,090	0,12
H21	LNKT05...-M06 MP3000	LNKT06...-M06 MP2500	LNKT08...-M06 MP2500	0,060	0,070	0,090

SMG = Seco material group
f_z = mm/tooth
v_c= m/min
a_r/D_c = %
All cutting data are start values

335.18 LNK.- Cutting data v_c = (m/min)

	MP2500			MP3000			T350M			F40M			MK1500			MK2050		
SMG	30%	20%	10%	30%	20%	10%	30%	20%	10%	30%	20%	10%	30%	20%	10%	30%	20%	10%
P1	255	275	300	240	260	285	225	240	260	195	205	230	—	—	—	250	270	295
P2	245	265	295	230	250	275	215	230	255	185	200	220	—	—	—	240	260	290
P3	215	230	255	205	215	240	185	200	225	165	175	195	—	—	—	210	225	250
P4	190	205	225	180	195	215	165	180	195	145	155	170	—	—	—	185	200	220
P5	185	195	220	175	185	205	160	170	190	140	150	165	—	—	—	180	195	215
P6	205	220	245	195	210	230	180	190	215	155	165	185	—	—	—	205	215	240
P7	195	210	230	185	195	220	170	180	200	150	155	175	—	—	—	195	205	225
P8	180	190	215	170	180	205	155	170	185	135	145	165	—	—	—	180	190	210
P11	190	200	225	180	190	210	165	175	195	145	155	170	—	—	—	185	200	220
M1	175	190	210	175	190	205	165	180	195	150	160	180	—	—	—	—	—	—
M2	150	160	175	145	155	170	140	145	165	125	135	150	—	—	—	—	—	—
M3	120	130	140	115	125	135	110	120	130	100	110	120	—	—	—	—	—	—
M4	90	100	110	90	95	105	85	90	100	80	85	90	—	—	—	—	—	—
M5	75	80	90	75	80	90	70	75	85	65	70	75	—	—	—	—	—	—
K1	195	210	230	185	200	220	170	185	200	145	160	175	275	300	330	260	280	310
K2	175	185	205	165	175	195	155	160	180	135	140	155	250	265	295	235	250	275
K3	150	155	175	140	150	165	130	135	150	110	120	135	210	225	250	200	210	235
K4	140	150	165	135	140	160	125	130	145	105	115	125	200	215	235	190	200	225
K5	85	90	100	80	85	95	75	80	90	65	70	75	120	130	145	115	120	135
K6	125	130	145	120	125	140	110	115	130	95	100	110	175	185	210	165	175	195
K7	110	115	130	105	110	120	95	100	115	85	90	100	155	165	185	150	155	175
N1	720	780	860	690	740	820	—	—	—	550	590	650	—	—	—	—	—	—
N2	580	630	700	550	600	660	—	—	—	445	475	530	—	—	—	—	—	—
N3	390	420	465	370	395	440	—	—	—	295	320	350	—	—	—	—	—	—
N11	445	480	530	420	455	500	—	—	—	335	365	400	—	—	—	—	—	—
S1	45	48	55	42	45	50	40	43	47	36	39	43	—	—	—	—	—	—
S2	36	38	43	34	36	40	32	34	38	29	31	35	—	—	—	—	—	—
S3	31	34	37	30	32	35	28	30	33	26	27	30	—	—	—	—	—	—
S11	65	65	75	60	65	70	55	60	65	50	55	60	—	—	—	—	—	—
S12	44	47	50	41	45	49	39	42	46	36	38	42	—	—	—	—	—	—
S13	35	37	41	33	35	39	31	34	37	28	30	34	—	—	—	—	—	—
H5	37	39	43	36	38	42	35	37	41	31	32	36	—	—	—	—	—	—
H8	38	41	46	38	40	44	37	39	44	32	34	38	—	—	—	—	—	—
H11	47	50	55	46	49	55	45	48	55	39	42	46	—	—	—	—	—	—
H12	75	80	90	75	80	85	75	75	85	65	65	75	—	—	—	—	—	—
H21	38	41	46	38	40	44	37	39	44	32	34	38	—	—	—	—	—	—

335.18 LNK.- Cutting data v_c = (m/min)

	MM4500			H25		
SMG	30%	20%	10%	30%	20%	10%
P1	155	165	185	—	—	—
P2	150	165	180	—	—	—
P3	130	140	155	—	—	—
P4	115	125	140	—	—	—
P5	115	120	135	—	—	—
P6	125	135	150	—	—	—
P7	120	125	140	—	—	—
P8	110	120	130	—	—	—
P11	115	125	140	—	—	—
M1	130	140	155	—	—	—
M2	110	115	130	—	—	—
M3	85	95	100	—	—	—
M4	65	70	80	—	—	—
M5	55	60	65	—	—	—
K1	—	—	—	—	—	—
K2	—	—	—	—	—	—
K3	—	—	—	—	—	—
K4	—	—	—	—	—	—
K5	—	—	—	—	—	—
K6	—	—	—	—	—	—
K7	—	—	—	—	—	—
N1	—	—	—	570	610	670
N2	—	—	—	455	490	540
N3	—	—	—	305	325	360
N11	—	—	—	350	375	410
S1	20	22	24	—	—	—
S2	16	18	20	—	—	—
S3	14	15	17	—	—	—
S11	29	31	34	—	—	—
S12	22	24	26	—	—	—
S13	18	19	21	—	—	—
H5	—	—	—	—	—	—
H8	—	—	—	—	—	—
H11	—	—	—	—	—	—
H12	—	—	—	—	—	—
H21	—	—	—	—	—	—

335.25 XN09 - Insert selection

SMG		f_z		
		30%	20%	10%
P1	XNHQ090508TN4-M08 F40M	0,14	0,16	0,22
P2	XNHQ090508TN4-M08 F40M	0,14	0,16	0,22
P3	XNHQ090508TN4-M08 F40M	0,13	0,15	0,20
P4	XNHQ090508TN4-M08 F40M	0,13	0,15	0,20
P5	XNHQ090508TN4-M08 F40M	0,13	0,15	0,20
P6	XNHQ090508TN4-M08 F40M	0,13	0,15	0,19
P7	XNHQ090508TN4-M08 MP2500	0,13	0,15	0,19
P8	XNHQ090508TN4-M08 MP2500	0,13	0,15	0,20
P11	XNHQ090508TN4-M08 F40M	0,13	0,15	0,19
M1	XNHQ090508TN4-M08 F40M	0,14	0,16	0,22
M2	XNHQ090508TN4-M08 F40M	0,13	0,15	0,20
M3	XNHQ090508TN4-M08 F40M	0,10	0,12	0,16
M4	XNHQ090508TN4-M08 F40M	0,090	0,10	0,14
M5	XNHQ090508TN4-M08 F40M	0,090	0,10	0,14
K1	XNHQ090508TN4-M08 MK2050	0,14	0,16	0,22
K2	XNHQ090508TN4-M08 MK2050	0,13	0,15	0,20
K3	XNHQ090508TN4-M08 MK2050	0,13	0,15	0,20
K4	XNHQ090508TN4-M08 MK2050	0,13	0,15	0,20
K5	XNHQ090508TN4-M08 MK2050	0,12	0,13	0,18
K6	XNHQ090508TN4-M08 MK2050	0,13	0,15	0,20
K7	XNHQ090508TN4-M08 MK2050	0,12	0,13	0,18
N1	XNHQ090508EN4-E07 F40M	0,16	0,18	0,24
N2	XNHQ090508EN4-E07 F40M	0,16	0,18	0,24
N3	XNHQ090508EN4-E07 F40M	0,16	0,18	0,24
N11	XNHQ090508EN4-E07 F40M	0,16	0,18	0,24
S1	XNHQ090508TN4-M08 F40M	0,090	0,10	0,14
S2	XNHQ090508TN4-M08 F40M	0,090	0,10	0,14
S3	XNHQ090508TN4-M08 F40M	0,085	0,095	0,13
S11	XNHQ090508TN4-M08 F40M	0,10	0,12	0,16
S12	XNHQ090508TN4-M08 F40M	0,10	0,12	0,16
S13	XNHQ090508TN4-M08 F40M	0,090	0,10	0,14
H5	XNHQ090508TN4-M08 MP2500	0,085	0,10	0,13
H8	XNHQ090508TN4-M08 MP2500	0,065	0,075	0,10
H11	XNHQ090508TN4-M08 F40M	0,085	0,10	0,13
H12	XNHQ090508TN4-M08 F40M	0,085	0,10	0,13
H21	XNHQ090508TN4-M08 MP2500	0,065	0,075	0,10

SMG = Seco material group
f_z = mm/tooth
v_c= m/min
a_r/D_c = %
All cutting data are start values

335.25 XN09 - Cutting data v_c = (m/min)

	F40M			MP2500			MK2050		
SMG	30%	20%	10%	30%	20%	10%	30%	20%	10%
P1	185	195	215	240	260	285	240	255	280
P2	180	190	210	235	255	280	230	250	275
P3	155	170	185	205	220	245	205	220	240
P4	140	150	165	180	195	215	180	190	210
P5	130	140	155	175	185	205	170	185	205
P6	150	160	180	195	210	235	195	205	230
P7	140	150	170	185	195	220	180	195	220
P8	130	140	155	175	185	205	170	185	205
P11	135	145	165	180	190	215	175	190	210
M1	145	155	170	170	180	200	—	—	—
M2	120	125	140	140	150	165	—	—	—
M3	95	100	115	115	120	135	—	—	—
M4	75	80	90	90	95	105	—	—	—
M5	60	65	75	75	80	85	—	—	—
K1	140	150	165	185	200	220	250	270	295
K2	125	135	150	165	175	195	220	235	260
K3	105	115	125	140	150	165	190	200	220
K4	100	110	120	135	145	160	180	190	210
K5	60	65	75	80	90	95	110	120	130
K6	90	95	105	120	125	140	160	170	185
K7	80	85	95	105	115	125	140	150	165
N1	520	560	620	—	—	—	—	—	—
N2	420	455	500	—	—	—	—	—	—
N3	280	305	330	—	—	—	—	—	—
N11	320	345	380	—	—	—	—	—	—
S1	35	37	41	—	—	—	—	—	—
S2	28	30	33	—	—	—	—	—	—
S3	24	26	29	—	—	—	—	—	—
S11	49	50	55	—	—	—	—	—	—
S12	34	36	40	—	—	—	—	—	—
S13	27	29	32	—	—	—	—	—	—
H5	30	31	35	35	38	42	—	—	—
H8	31	33	37	38	40	44	—	—	—
H11	38	40	44	45	48	55	—	—	—
H12	55	60	65	70	70	80	—	—	—
H21	31	33	37	38	40	44	—	—	—

335.25 XN12 - Insert selection

SMG		f_z		
		30%	20%	10%
P1	XNHQ120608TN4-M10 F40M	0,17	0,19	0,26
P2	XNHQ120608TN4-M10 F40M	0,17	0,20	0,26
P3	XNHQ120608TN4-M10 F40M	0,16	0,19	0,24
P4	XNHQ120608TN4-M10 F40M	0,16	0,18	0,24
P5	XNHQ120608TN4-M10 F40M	0,16	0,18	0,24
P6	XNHQ120608TN4-M10 F40M	0,15	0,18	0,24
P7	XNHQ120608TN4-M10 MP2500	0,15	0,18	0,24
P8	XNHQ120608TN4-M10 MP2500	0,16	0,19	0,24
P11	XNHQ120608TN4-M10 F40M	0,15	0,18	0,24
M1	XNHQ120608TN4-M10 F40M	0,17	0,20	0,26
M2	XNHQ120608TN4-M10 F40M	0,16	0,18	0,24
M3	XNHQ120608TN4-M10 F40M	0,12	0,14	0,19
M4	XNHQ120608TN4-M10 F40M	0,11	0,13	0,17
M5	XNHQ120608TN4-M10 F40M	0,11	0,13	0,17
K1	XNHQ120608TN4-M10 MK2050	0,17	0,20	0,26
K2	XNHQ120608TN4-M10 MK2050	0,16	0,18	0,24
K3	XNHQ120608TN4-M10 MK2050	0,16	0,18	0,24
K4	XNHQ120608TN4-M10 MK2050	0,16	0,18	0,24
K5	XNHQ120608TN4-M10 MK2050	0,14	0,16	0,22
K6	XNHQ120608TN4-M10 MK2050	0,16	0,18	0,24
K7	XNHQ120608TN4-M10 MK2050	0,14	0,16	0,22
N1	XNHQ120608EN4-E09 F40M	0,20	0,22	0,30
N2	XNHQ120608EN4-E09 F40M	0,20	0,22	0,30
N3	XNHQ120608EN4-E09 F40M	0,20	0,22	0,30
N11	XNHQ120608EN4-E09 F40M	0,20	0,22	0,30
S1	XNHQ120608TN4-M10 F40M	0,11	0,13	0,17
S2	XNHQ120608TN4-M10 F40M	0,11	0,13	0,17
S3	XNHQ120608TN4-M10 F40M	0,10	0,12	0,16
S11	XNHQ120608TN4-M10 F40M	0,12	0,14	0,19
S12	XNHQ120608TN4-M10 F40M	0,12	0,14	0,19
S13	XNHQ120608TN4-M10 F40M	0,11	0,13	0,17
H5	XNHQ120608TN4-M10 MP2500	0,11	0,12	0,16
H8	XNHQ120608TN4-M10 MP2500	0,080	0,095	0,12
H11	XNHQ120608TN4-M10 F40M	0,11	0,12	0,16
H12	XNHQ120608TN4-M10 F40M	0,11	0,12	0,16
H21	XNHQ120608TN4-M10 MP2500	0,080	0,095	0,12

SMG = Seco material group
f_z = mm/tooth
v_c= m/min
a_r/D_c = %
All cutting data are start values

335.25 XN12 - Cutting data v_c = (m/min)

	F40M			MP2500			MK2050		
SMG	30%	20%	10%	30%	20%	10%	30%	20%	10%
P1	175	190	210	235	250	275	230	250	275
P2	170	185	205	225	240	270	225	240	265
P3	150	160	180	200	210	235	195	210	235
P4	135	145	160	175	190	210	175	185	205
P5	125	135	150	165	180	200	165	175	195
P6	145	155	170	190	200	225	190	200	220
P7	135	145	160	180	190	210	180	190	210
P8	125	135	150	165	175	200	165	175	195
P11	135	140	155	175	185	205	175	185	200
M1	140	150	165	165	175	195	—	—	—
M2	115	125	135	135	145	160	—	—	—
M3	95	100	110	110	120	130	—	—	—
M4	70	75	85	85	90	100	—	—	—
M5	60	65	70	70	75	85	—	—	—
K1	135	145	160	180	190	215	240	255	285
K2	120	130	145	160	170	190	215	230	255
K3	100	110	120	135	145	160	180	195	215
K4	95	105	115	130	140	155	170	185	205
K5	60	65	70	80	85	95	105	115	125
K6	85	90	100	115	120	135	150	165	180
K7	75	80	90	100	110	120	135	145	160
N1	500	530	590	—	—	—	—	—	—
N2	405	430	480	—	—	—	—	—	—
N3	270	285	320	—	—	—	—	—	—
N11	305	325	365	—	—	—	—	—	—
S1	34	36	40	—	—	—	—	—	—
S2	27	29	32	—	—	—	—	—	—
S3	24	25	28	—	—	—	—	—	—
S11	48	50	55	—	—	—	—	—	—
S12	33	35	39	—	—	—	—	—	—
S13	26	28	31	—	—	—	—	—	—
H5	28	31	34	34	37	41	—	—	—
H8	31	32	36	37	39	43	—	—	—
H11	36	39	43	43	47	50	—	—	—
H12	55	60	65	65	70	80	—	—	—
H21	31	32	36	37	39	43	—	—	—

335.25 XN14/17 - Insert selection

SMG			f_z		
			30%	20%	10%
P1	XNHQ140708TN4-M11 F40M	XNHQ170708TN4-M13 F40M	0,20	0,22	0,30
P2	XNHQ140708TN4-M11 F40M	XNHQ170708TN4-M13 F40M	0,20	0,24	0,32
P3	XNHQ140708TN4-M11 F40M	XNHQ170708TN4-M13 F40M	0,19	0,22	0,30
P4	XNHQ140708TN4-M11 F40M	XNHQ170708TN4-M13 F40M	0,19	0,22	0,28
P5	XNHQ140708TN4-M11 F40M	XNHQ170708TN4-M13 F40M	0,18	0,22	0,28
P6	XNHQ140708TN4-M11 F40M	XNHQ170708TN4-M13 F40M	0,18	0,20	0,28
P7	XNHQ140708TN4-M11 MP2500	XNHQ170708TN4-M13 MP2500	0,18	0,20	0,28
P8	XNHQ140708TN4-M11 MP2500	XNHQ170708TN4-M13 MP2500	0,19	0,22	0,30
P11	XNHQ140708TN4-M11 F40M	XNHQ170708TN4-M13 F40M	0,18	0,20	0,28
M1	XNHQ140708TN4-M11 F40M	XNHQ170708TN4-M13 F40M	0,20	0,24	0,32
M2	XNHQ140708TN4-M11 F40M	XNHQ170708TN4-M13 F40M	0,18	0,22	0,28
M3	XNHQ140708TN4-M11 F40M	XNHQ170708TN4-M13 F40M	0,15	0,17	0,22
M4	XNHQ140708TN4-M11 F40M	XNHQ170708TN4-M13 F40M	0,13	0,15	0,20
M5	XNHQ140708TN4-M11 F40M	XNHQ170708TN4-M13 F40M	0,13	0,15	0,20
K1	XNHQ140708TN4-M11 MK2050	XNHQ170708TN4-M13 MK2050	0,20	0,24	0,32
K2	XNHQ140708TN4-M11 MK2050	XNHQ170708TN4-M13 MK2050	0,18	0,22	0,28
K3	XNHQ140708TN4-M11 MK2050	XNHQ170708TN4-M13 MK2050	0,18	0,22	0,28
K4	XNHQ140708TN4-M11 MK2050	XNHQ170708TN4-M13 MK2050	0,18	0,22	0,28
K5	XNHQ140708TN4-M11 MK2050	XNHQ170708TN4-M13 MK2050	0,17	0,19	0,26
K6	XNHQ140708TN4-M11 MK2050	XNHQ170708TN4-M13 MK2050	0,18	0,22	0,28
K7	XNHQ140708TN4-M11 MK2050	XNHQ170708TN4-M13 MK2050	0,17	0,19	0,26
N1	XNHQ140708EN4-E10 H25	XNHQ170708EN4-E12 F40M	0,24	0,28	0,36
N2	XNHQ140708EN4-E10 H25	XNHQ170708EN4-E12 F40M	0,24	0,28	0,36
N3	XNHQ140708EN4-E10 H25	XNHQ170708EN4-E12 F40M	0,24	0,28	0,36
N11	XNHQ140708EN4-E10 H25	XNHQ170708EN4-E12 F40M	0,24	0,28	0,36
S1	XNHQ140708TN4-M11 F40M	XNHQ170708TN4-M13 F40M	0,13	0,15	0,20
S2	XNHQ140708TN4-M11 F40M	XNHQ170708TN4-M13 F40M	0,13	0,15	0,20
S3	XNHQ140708TN4-M11 F40M	XNHQ170708TN4-M13 F40M	0,12	0,14	0,18
S11	XNHQ140708TN4-M11 F40M	XNHQ170708TN4-M13 F40M	0,15	0,17	0,22
S12	XNHQ140708TN4-M11 F40M	XNHQ170708TN4-M13 F40M	0,15	0,17	0,22
S13	XNHQ140708TN4-M11 F40M	XNHQ170708TN4-M13 F40M	0,13	0,15	0,20
H5	XNHQ140708TN4-M11 MP2500	XNHQ170708TN4-M13 MP2500	0,13	0,14	0,19
H8	XNHQ140708TN4-M11 MP2500	XNHQ170708TN4-M13 MP2500	0,095	0,11	0,15
H11	XNHQ140708TN4-M11 MP2500	XNHQ170708TN4-M13 MP2500	0,13	0,14	0,19
H12	XNHQ140708TN4-M11 MP2500	XNHQ170708TN4-M13 MP2500	0,13	0,14	0,19
H21	XNHQ140708TN4-M11 MP2500	XNHQ170708TN4-M13 MP2500	0,095	0,11	0,15

SMG = Seco material group
f_z = mm/tooth
v_c= m/min
a_r/D_c = %
All cutting data are start values

335.25 XN14/17 - Cutting data v_c = (m/min)

	MP2500			F40M			MK2050			H25		
SMG	30%	20%	10%	30%	20%	10%	30%	20%	10%	30%	20%	10%
P1	230	250	275	175	190	210	225	245	270	—	—	—
P2	225	235	260	170	180	200	220	235	260	—	—	—
P3	195	210	230	150	160	175	190	205	225	—	—	—
P4	170	185	205	130	140	155	170	180	205	—	—	—
P5	165	175	195	125	135	150	165	175	195	—	—	—
P6	185	205	220	140	155	170	185	200	220	—	—	—
P7	175	190	210	135	145	160	175	190	205	—	—	—
P8	165	175	195	125	135	145	160	175	190	—	—	—
P11	170	185	205	130	140	155	170	185	200	—	—	—
M1	160	170	190	135	145	160	—	—	—	—	—	—
M2	135	140	160	115	120	135	—	—	—	—	—	—
M3	110	115	130	90	100	110	—	—	—	—	—	—
M4	85	90	100	70	75	85	—	—	—	—	—	—
M5	70	75	85	60	65	70	—	—	—	—	—	—
K1	175	185	210	135	140	155	235	250	280	—	—	—
K2	160	165	185	120	125	140	210	225	250	—	—	—
K3	135	140	160	100	105	120	180	190	210	—	—	—
K4	130	135	150	95	100	115	170	180	205	—	—	—
K5	75	85	90	60	65	70	105	110	125	—	—	—
K6	115	120	135	85	90	100	150	160	180	—	—	—
K7	100	105	120	75	80	90	135	145	160	—	—	—
N1	640	690	770	490	520	580	—	—	—	495	530	600
N2	520	560	620	395	420	470	—	—	—	400	430	480
N3	345	370	410	265	280	310	—	—	—	270	285	320
N11	395	425	470	300	320	355	—	—	—	305	325	365
S1	41	44	48	33	36	39	—	—	—	—	—	—
S2	33	35	39	27	29	32	—	—	—	—	—	—
S3	29	31	35	24	25	28	—	—	—	—	—	—
S11	55	60	70	46	50	55	—	—	—	—	—	—
S12	40	43	48	32	35	39	—	—	—	—	—	—
S13	32	34	38	26	28	31	—	—	—	—	—	—
H5	33	36	40	28	30	33	—	—	—	—	—	—
H8	36	38	42	30	32	35	—	—	—	—	—	—
H11	43	46	50	36	39	43	—	—	—	—	—	—
H12	70	75	85	55	60	70	—	—	—	—	—	—
H21	36	38	42	30	32	35	—	—	—	—	—	—

335.25 LN14/17 - Insert selection

SMG			f_z		
			30%	20%	10%
P1	LNHQ140708TN4-M11 F40M	LNHQ170708TN4-M13 F40M	0,20	0,22	0,30
P2	LNHQ140708TN4-M11 F40M	LNHQ170708TN4-M13 F40M	0,20	0,24	0,32
P3	LNHQ140708TN4-M11 F40M	LNHQ170708TN4-M13 F40M	0,19	0,22	0,30
P4	LNHQ140708TN4-M11 F40M	LNHQ170708TN4-M13 F40M	0,19	0,22	0,28
P5	LNHQ140708TN4-M11 F40M	LNHQ170708TN4-M13 F40M	0,18	0,22	0,28
P6	LNHQ140708TN4-M11 F40M	LNHQ170708TN4-M13 F40M	0,18	0,20	0,28
P7	LNHQ140708TN4-M11 MP2500	LNHQ170708TN4-M13 F40M	0,18	0,20	0,28
P8	LNHQ140708TN4-M11 MP2500	LNHQ170708TN4-M13 F40M	0,19	0,22	0,30
P11	LNHQ140708TN4-M11 F40M	LNHQ170708TN4-M13 F40M	0,18	0,20	0,28
M1	LNHQ140708TN4-M11 F40M	LNHQ170708TN4-M13 F40M	0,20	0,24	0,32
M2	LNHQ140708TN4-M11 F40M	LNHQ170708TN4-M13 F40M	0,18	0,22	0,28
M3	LNHQ140708TN4-M11 F40M	LNHQ170708TN4-M13 F40M	0,15	0,17	0,22
M4	LNHQ140708TN4-M11 F40M	LNHQ170708TN4-M13 F40M	0,13	0,15	0,20
M5	LNHQ140708TN4-M11 F40M	LNHQ170708TN4-M13 F40M	0,13	0,15	0,20
K1	LNHQ140708TN4-M11 MP2500	LNHQ170708TN4-M13 F40M	0,20	0,24	0,32
K2	LNHQ140708TN4-M11 MP2500	LNHQ170708TN4-M13 F40M	0,18	0,22	0,28
K3	LNHQ140708TN4-M11 MP2500	LNHQ170708TN4-M13 F40M	0,18	0,22	0,28
K4	LNHQ140708TN4-M11 MP2500	LNHQ170708TN4-M13 F40M	0,18	0,22	0,28
K5	LNHQ140708TN4-M11 MP2500	LNHQ170708TN4-M13 F40M	0,17	0,19	0,26
K6	LNHQ140708TN4-M11 MP2500	LNHQ170708TN4-M13 F40M	0,18	0,22	0,28
K7	LNHQ140708TN4-M11 MP2500	LNHQ170708TN4-M13 F40M	0,17	0,19	0,26
S1	LNHQ140708TN4-M11 F40M	LNHQ170708TN4-M13 F40M	0,13	0,15	0,20
S2	LNHQ140708TN4-M11 F40M	LNHQ170708TN4-M13 F40M	0,13	0,15	0,20
S3	LNHQ140708TN4-M11 F40M	LNHQ170708TN4-M13 F40M	0,12	0,14	0,18
S11	LNHQ140708TN4-M11 F40M	LNHQ170708TN4-M13 F40M	0,15	0,17	0,22
S12	LNHQ140708TN4-M11 F40M	LNHQ170708TN4-M13 F40M	0,15	0,17	0,22
S13	LNHQ140708TN4-M11 F40M	LNHQ170708TN4-M13 F40M	0,13	0,15	0,20
H5	LNHQ140708TN4-M11 MP2500	LNHQ170708TN4-M13 F40M	0,13	0,14	0,19
H8	LNHQ140708TN4-M11 MP2500	LNHQ170708TN4-M13 F40M	0,095	0,11	0,15
H11	LNHQ140708TN4-M11 MP2500	LNHQ170708TN4-M13 F40M	0,13	0,14	0,19
H12	LNHQ140708TN4-M11 MP2500	LNHQ170708TN4-M13 F40M	0,13	0,14	0,19
H21	LNHQ140708TN4-M11 MP2500	LNHQ170708TN4-M13 F40M	0,095	0,11	0,15

SMG = Seco material group
f_z = mm/tooth
v_c= m/min
a_r/D_c = %
All cutting data are start values

335.25 LN14/17 - Cutting data v_c = (m/min)

SMG	MP2500			F40M		
	30%	20%	10%	30%	20%	10%
P1	225	245	270	170	185	205
P2	220	235	260	165	175	195
P3	195	205	225	145	155	170
P4	170	180	205	130	135	155
P5	165	175	195	125	130	145
P6	185	200	220	140	150	165
P7	175	190	205	130	145	155
P8	160	175	190	125	130	145
P11	170	185	200	130	140	150
M1	160	170	185	135	140	160
M2	130	140	155	110	120	135
M3	105	115	130	90	95	110
M4	85	90	100	70	75	85
M5	70	75	80	60	65	70
K1	175	185	205	130	140	155
K2	155	165	185	120	125	140
K3	130	140	155	100	105	120
K4	125	135	150	95	100	115
K5	75	80	90	60	60	70
K6	110	115	130	85	90	100
K7	100	105	115	75	80	90
N1	640	680	760	480	520	570
N2	510	550	610	390	415	460
N3	340	365	405	260	280	310
N11	390	420	465	295	315	350
S1	40	43	48	33	35	39
S2	33	35	39	26	28	31
S3	29	31	34	23	25	28
S11	55	60	65	46	49	55
S12	39	42	47	32	34	38
S13	32	34	37	26	28	30
H5	33	36	39	27	30	33
H8	36	38	42	30	32	35
H11	42	46	50	35	38	42
H12	70	75	80	55	60	70
H21	36	38	42	30	32	35

335.29 Round 5 - Insert selection

SMG		f_z		
		30%	20%	10%
P1	RDHW0501M0-MD01 F40M	0,050	0,060	0,080
P2	RDHW0501M0-MD01 F40M	0,050	0,060	0,080
P3	RDHW0501M0-MD01 F40M	0,050	0,055	0,075
P4	RDHW0501M0-MD01 F40M	0,048	0,055	0,075
P5	RDHW0501M0-MD01 F40M	0,048	0,055	0,075
P6	RDHW0501M0-MD01 F40M	0,048	0,055	0,070
P7	RDHW0501M0-MD01 MP3000	0,048	0,055	0,070
P8	RDHW0501M0-MD01 MP3000	0,050	0,055	0,075
P11	RDHW0501M0-MD01 F40M	0,048	0,055	0,070
M1	RDHW0501M0-MD01 F40M	0,050	0,060	0,080
M2	RDHW0501M0-MD01 F40M	0,048	0,055	0,075
M3	RDHW0501M0-MD01 F40M	0,038	0,044	0,060
M4	RDHW0501M0-MD01 F40M	0,034	0,038	0,050
M5	RDHW0501M0-MD01 F40M	0,034	0,038	0,050
K1	RDHW0501M0-MD01 MP3000	0,050	0,060	0,080
K2	RDHW0501M0-MD01 MP3000	0,048	0,055	0,075
K3	RDHW0501M0-MD01 MP3000	0,048	0,055	0,075
K4	RDHW0501M0-MD01 MP3000	0,048	0,055	0,075
K5	RDHW0501M0-MD01 MP3000	0,042	0,050	0,065
K6	RDHW0501M0-MD01 MP3000	0,048	0,055	0,075
K7	RDHW0501M0-MD01 MP3000	0,042	0,050	0,065
N1	RDHW0501M0-MD01 MP3000	0,065	0,075	0,10
N2	RDHW0501M0-MD01 MP3000	0,065	0,075	0,10
N3	RDHW0501M0-MD01 MP3000	0,065	0,075	0,10
N11	RDHW0501M0-MD01 MP3000	0,065	0,075	0,10
S1	RDHW0501M0-MD01 F40M	0,034	0,038	0,050
S2	RDHW0501M0-MD01 F40M	0,034	0,038	0,050
S3	RDHW0501M0-MD01 F40M	0,030	0,036	0,048
S11	RDHW0501M0-MD01 F40M	0,038	0,044	0,060
S12	RDHW0501M0-MD01 F40M	0,038	0,044	0,060
S13	RDHW0501M0-MD01 F40M	0,034	0,038	0,050
H5	RDHW0501M0-MD01 MP3000	0,032	0,038	0,050
H8	RDHW0501M0-MD01 MP3000	0,024	0,028	0,038
H11	RDHW0501M0-MD01 MP3000	0,032	0,038	0,050
H12	RDHW0501M0-MD01 MP3000	0,032	0,038	0,050
H21	RDHW0501M0-MD01 MP3000	0,024	0,028	0,038

SMG = Seco material group
f_z = mm/tooth
v_c= m/min
a_r/D_c = %
All cutting data are start values

335.29 Round 5 - Cutting data v_c = (m/min)

SMG	MP3000			F40M		
	30%	20%	10%	30%	20%	10%
P1	315	335	365	250	265	295
P2	305	325	360	245	260	285
P3	265	285	310	210	225	250
P4	235	250	275	185	200	220
P5	225	240	260	180	190	210
P6	250	265	295	200	215	235
P7	235	250	280	190	200	225
P8	220	240	260	180	190	210
P11	230	245	270	185	195	215
M1	230	245	265	200	210	230
M2	185	200	220	160	170	190
M3	145	155	170	125	135	150
M4	110	120	130	95	105	115
M5	95	100	110	80	85	95
K1	245	255	285	195	205	225
K2	210	225	250	170	180	200
K3	180	190	210	145	155	170
K4	170	180	200	135	145	160
K5	105	110	120	85	90	95
K6	150	160	175	120	130	140
K7	135	140	155	105	115	125
N1	920	980	1075	740	780	870
N2	740	790	870	600	630	700
N3	495	530	580	395	425	465
N11	570	600	670	455	485	530
S1	50	55	60	45	48	55
S2	42	45	49	36	39	42
S3	37	39	43	32	33	37
S11	75	80	85	65	70	75
S12	50	55	60	45	48	50
S13	41	44	48	35	38	41
H5	44	47	50	38	40	44
H8	45	48	55	39	41	45
H11	55	60	65	48	50	55
H12	90	95	105	80	85	90
H21	45	48	55	39	41	45

335.29 Round 6 - Insert selection

SMG		f_z		
		30%	20%	10%
P1	RDHW06T1M0-MD02 F40M	0,050	0,060	0,080
P2	RDHW06T1M0-MD02 F40M	0,050	0,060	0,080
P3	RDHW06T1M0-MD02 F40M	0,050	0,055	0,075
P4	RDHW06T1M0-MD02 F40M	0,048	0,055	0,075
P5	RDHW06T1M0-MD02 F40M	0,048	0,055	0,075
P6	RDHW06T1M0-MD02 F40M	0,048	0,055	0,070
P7	RDHW06T1M0-MD02 MP3000	0,048	0,055	0,070
P8	RDHW06T1M0-MD02 MP3000	0,050	0,055	0,075
P11	RDHW06T1M0-MD02 F40M	0,048	0,055	0,070
M1	RDHW06T1M0-MD02 F40M	0,050	0,060	0,080
M2	RDHW06T1M0-MD02 F40M	0,048	0,055	0,075
M3	RDHW06T1M0-MD02 F40M	0,038	0,044	0,060
M4	RDHW06T1M0-MD02 F40M	0,034	0,038	0,050
M5	RDHW06T1M0-MD02 F40M	0,034	0,038	0,050
K1	RDHW06T1M0-MD02 MK2050	0,050	0,060	0,080
K2	RDHW06T1M0-MD02 MK2050	0,048	0,055	0,075
K3	RDHW06T1M0-MD02 MK2050	0,048	0,055	0,075
K4	RDHW06T1M0-MD02 MK2050	0,048	0,055	0,075
K5	RDHW06T1M0-MD02 MK2050	0,042	0,050	0,065
K6	RDHW06T1M0-MD02 MK2050	0,048	0,055	0,075
K7	RDHW06T1M0-MD02 MK2050	0,042	0,050	0,065
N1	RDHT06T1M0-E02 H25	0,044	0,050	0,070
N2	RDHT06T1M0-E02 H25	0,044	0,050	0,070
N3	RDHT06T1M0-E02 H25	0,044	0,050	0,070
N11	RDHT06T1M0-E02 H25	0,044	0,050	0,070
S1	RDHW06T1M0-MD02 F40M	0,034	0,038	0,050
S2	RDHW06T1M0-MD02 F40M	0,034	0,038	0,050
S3	RDHW06T1M0-MD02 F40M	0,030	0,036	0,048
S11	RDHW06T1M0-MD02 F40M	0,038	0,044	0,060
S12	RDHW06T1M0-MD02 F40M	0,038	0,044	0,060
S13	RDHW06T1M0-MD02 F40M	0,034	0,038	0,050
H5	RDHW06T1M0-MD02 F15M	0,032	0,038	0,050
H8	RDHW06T1M0-MD02 F15M	0,024	0,028	0,038
H11	RDHW06T1M0-MD02 F15M	0,032	0,038	0,050
H12	RDHW06T1M0-MD02 F15M	0,032	0,038	0,050
H21	RDHW06T1M0-MD02 F15M	0,024	0,028	0,038

SMG = Seco material group
f_z = mm/tooth
v_c= m/min
a_r/D_c = %
All cutting data are start values

335.29 Round 6 - Cutting data v_c = (m/min)

	MP3000			F15M			F30M			F40M			MK2050			H25		
SMG	30%	20%	10%	30%	20%	10%	30%	20%	10%	30%	20%	10%	30%	20%	10%	30%	20%	10%
P1	300	320	350	290	305	340	255	270	295	240	255	280	315	330	365	—	—	—
P2	295	310	345	285	300	330	245	260	290	235	250	275	305	325	355	—	—	—
P3	255	270	300	245	260	285	215	230	250	205	215	240	265	280	310	—	—	—
P4	225	240	260	215	230	250	190	200	220	180	190	210	235	250	275	—	—	—
P5	215	230	250	205	220	240	180	190	210	170	180	200	225	235	260	—	—	—
P6	240	255	285	230	245	275	200	215	240	190	205	225	250	265	295	—	—	—
P7	225	240	270	220	230	255	190	205	225	180	195	215	235	250	280	—	—	—
P8	215	230	250	205	220	240	180	190	210	170	180	200	220	235	260	—	—	—
P11	220	235	260	210	225	250	185	195	220	175	190	210	230	245	270	—	—	—
M1	220	235	255	230	240	265	200	210	230	190	200	220	—	—	—	—	—	—
M2	180	190	210	185	195	215	160	170	190	155	165	180	—	—	—	—	—	—
M3	140	150	165	145	155	170	125	135	150	120	130	140	—	—	—	—	—	—
M4	105	115	125	110	120	130	95	105	115	90	100	110	—	—	—	—	—	—
M5	90	95	105	90	100	110	80	85	95	75	80	90	—	—	—	—	—	—
K1	235	245	270	225	235	260	195	205	230	185	195	215	330	350	385	—	—	—
K2	205	215	240	195	210	230	170	180	200	165	175	190	290	305	335	—	—	—
K3	170	185	200	165	175	195	145	155	170	140	145	160	245	260	285	—	—	—
K4	165	175	190	160	170	185	140	145	160	130	140	155	235	250	270	—	—	—
K5	100	105	115	95	100	110	85	90	100	80	85	95	140	150	165	—	—	—
K6	145	155	170	140	150	160	120	130	140	115	125	135	205	220	240	—	—	—
K7	130	135	150	120	130	145	105	115	125	100	110	120	180	190	210	—	—	—
N1	880	940	1050	850	900	1000	740	790	870	710	750	830	—	—	—	810	870	950
N2	710	760	840	690	730	800	600	640	700	570	610	670	—	—	—	660	700	770
N3	475	510	560	455	485	540	400	425	470	380	405	445	—	—	—	440	465	510
N11	540	580	640	520	560	610	455	485	540	435	465	510	—	—	—	500	530	580
S1	50	55	60	50	55	60	45	48	55	43	46	50	—	—	—	—	—	—
S2	40	43	47	42	44	49	36	39	43	35	37	41	—	—	—	—	—	—
S3	35	37	41	36	38	42	32	34	37	30	32	35	—	—	—	—	—	—
S11	70	75	85	75	80	85	65	70	75	60	65	70	—	—	—	—	—	—
S12	50	55	60	50	55	60	45	48	55	43	46	50	—	—	—	—	—	—
S13	39	42	46	41	43	48	35	38	42	34	36	40	—	—	—	—	—	—
H5	42	45	49	43	46	50	38	40	44	36	38	42	—	—	—	—	—	—
H8	44	46	50	45	47	50	39	41	45	37	39	43	—	—	—	—	—	—
H11	55	55	65	55	60	65	49	50	55	46	49	55	—	—	—	—	—	—
H12	85	95	100	90	95	105	80	85	90	75	80	85	—	—	—	—	—	—
H21	44	46	50	45	47	50	39	41	45	37	39	43	—	—	—	—	—	—

335.29 Round 7 - Insert selection

SMG		f_z		
		30%	20%	10%
P1	RDHW0702M0-MD03 F40M	0,070	0,080	0,10
P2	RDHW0702M0-MD03 F40M	0,070	0,080	0,11
P3	RDHW0702M0-MD03 F40M	0,065	0,075	0,10
P4	RDHW0702M0-MD03 F40M	0,065	0,075	0,10
P5	RDHW0702M0-MD03 F40M	0,065	0,075	0,095
P6	RDHW0702M0-MD03 F40M	0,065	0,070	0,095
P7	RDHW0702M0-MD03 MP3000	0,065	0,070	0,095
P8	RDHW0702M0-MD03 MP3000	0,065	0,075	0,10
P11	RDHW0702M0-MD03 F40M	0,065	0,070	0,095
M1	RDHW0702M0-MD03 F40M	0,070	0,080	0,11
M2	RDHW0702M0-MD03 F40M	0,065	0,075	0,095
M3	RDHW0702M0-MD03 F40M	0,050	0,060	0,080
M4	RDHW0702M0-MD03 F40M	0,044	0,050	0,070
M5	RDHW0702M0-MD03 F40M	0,044	0,050	0,070
K1	RDHW0702M0T-MD04 MK2050	0,070	0,080	0,11
K2	RDHW0702M0T-MD04 MK2050	0,065	0,075	0,095
K3	RDHW0702M0T-MD04 MK2050	0,065	0,075	0,095
K4	RDHW0702M0T-MD04 MK2050	0,065	0,075	0,095
K5	RDHW0702M0T-MD04 MK2050	0,055	0,065	0,085
K6	RDHW0702M0T-MD04 MK2050	0,065	0,075	0,095
K7	RDHW0702M0T-MD04 MK2050	0,055	0,065	0,085
N1	RDHW0702M0-MD03 MP3000	0,090	0,10	0,14
N2	RDHW0702M0-MD03 MP3000	0,090	0,10	0,14
N3	RDHW0702M0-MD03 MP3000	0,090	0,10	0,14
N11	RDHW0702M0-MD03 MP3000	0,090	0,10	0,14
S1	RDHW0702M0-MD03 F40M	0,044	0,050	0,070
S2	RDHW0702M0-MD03 F40M	0,044	0,050	0,070
S3	RDHW0702M0-MD03 F40M	0,042	0,048	0,065
S11	RDHW0702M0-MD03 F40M	0,050	0,060	0,080
S12	RDHW0702M0-MD03 F40M	0,050	0,060	0,080
S13	RDHW0702M0-MD03 F40M	0,044	0,050	0,070
H5	RDHW0702M0T-MD04 F15M	0,044	0,050	0,065
H8	RDHW0702M0T-MD04 F15M	0,032	0,038	0,050
H11	RDHW0702M0T-MD04 F15M	0,044	0,050	0,065
H12	RDHW0702M0T-MD04 F15M	0,044	0,050	0,065
H21	RDHW0702M0T-MD04 F15M	0,032	0,038	0,050

SMG = Seco material group
f_z = mm/tooth
v_c= m/min
a_r/D_c = %
All cutting data are start values

335.29 Round 7 - Cutting data v_c = (m/min)

	MP3000			F15M			F40M			MK2050		
SMG	30%	20%	10%	30%	20%	10%	30%	20%	10%	30%	20%	10%
P1	285	305	340	275	290	325	230	245	270	295	315	355
P2	280	295	325	265	285	315	225	240	260	290	310	340
P3	245	260	285	235	250	275	195	205	230	250	270	295
P4	215	225	250	205	220	240	170	180	200	220	235	260
P5	205	215	240	195	210	230	165	175	195	210	225	250
P6	230	245	270	220	235	260	185	195	215	240	255	280
P7	215	235	255	205	225	245	175	185	205	225	240	265
P8	205	215	240	195	210	230	165	175	190	210	225	250
P11	210	225	250	200	215	240	170	180	200	220	235	260
M1	210	220	245	215	230	250	180	190	210	—	—	—
M2	170	180	200	175	190	210	145	155	175	—	—	—
M3	135	145	160	140	150	165	115	125	135	—	—	—
M4	105	110	120	105	115	125	90	95	105	—	—	—
M5	85	90	100	90	95	105	75	80	85	—	—	—
K1	220	235	260	210	225	250	175	190	205	310	335	365
K2	195	205	230	185	200	220	155	165	185	275	290	325
K3	165	175	195	155	165	185	130	140	155	230	245	275
K4	155	165	185	150	160	180	125	135	150	220	235	260
K5	95	100	110	90	95	110	75	80	90	135	145	160
K6	140	145	165	130	140	155	110	115	130	195	210	230
K7	125	130	145	120	125	140	100	105	115	175	185	205
N1	830	890	980	800	860	940	670	710	780	—	—	—
N2	670	720	790	640	690	760	540	580	630	—	—	—
N3	450	480	530	430	460	500	360	385	420	—	—	—
N11	510	550	600	490	530	580	410	440	480	—	—	—
S1	48	50	55	50	55	60	42	44	49	—	—	—
S2	39	41	45	40	43	47	34	36	39	—	—	—
S3	34	36	39	35	37	41	29	31	34	—	—	—
S11	70	70	80	70	75	85	60	60	70	—	—	—
S12	48	50	55	50	50	60	41	44	48	—	—	—
S13	38	40	44	39	42	46	33	35	38	—	—	—

335.18/335.29 Round 8 - Insert selection

SMG		f_z		
		30%	20%	10%
P1	RDHW0803M0-MD03 F40M	0,070	0,080	0,10
P2	RDHW0803M0-MD03 F40M	0,070	0,080	0,11
P3	RDHW0803M0-MD03 F40M	0,065	0,075	0,10
P4	RDKW0803M0T-MD05 F40M	0,080	0,095	0,12
P5	RDKW0803M0T-MD05 F40M	0,080	0,090	0,12
P6	RDKW0803M0T-MD05 F40M	0,080	0,090	0,12
P7	RDKW0803M0T-MD05 MP2500	0,080	0,090	0,12
P8	RDKW0803M0T-MD05 MP2500	0,080	0,095	0,13
P11	RDKW0803M0T-MD05 F40M	0,080	0,090	0,12
M1	RDHW0803M0-MD03 F40M	0,070	0,080	0,11
M2	RDHW0803M0-MD03 F40M	0,065	0,075	0,095
M3	RDHW0803M0-MD03 F40M	0,050	0,060	0,080
M4	RDHW0803M0-MD03 F40M	0,044	0,050	0,070
M5	RDHW0803M0-MD03 F40M	0,044	0,050	0,070
K1	RDKW0803M0T-MD05 MK2050	0,085	0,10	0,13
K2	RDKW0803M0T-MD05 MK2050	0,080	0,090	0,12
K3	RDKW0803M0T-MD05 MK2050	0,080	0,090	0,12
K4	RDKW0803M0T-MD05 MK2050	0,080	0,090	0,12
K5	RDKW0803M0T-MD05 MK2050	0,070	0,080	0,11
K6	RDKW0803M0T-MD05 MK2050	0,080	0,090	0,12
K7	RDKW0803M0T-MD05 MK2050	0,070	0,080	0,11
N1	RDHT0803M0-E03 H25	0,065	0,075	0,10
N2	RDHT0803M0-E03 H25	0,065	0,075	0,10
N3	RDHT0803M0-E03 H25	0,065	0,075	0,10
N11	RDHT0803M0-E03 H25	0,065	0,075	0,10
S1	RDHW0803M0-MD03 F40M	0,044	0,050	0,070
S2	RDHW0803M0-MD03 F40M	0,044	0,050	0,070
S3	RDHW0803M0-MD03 F40M	0,042	0,048	0,065
S11	RDHW0803M0-MD03 F40M	0,050	0,060	0,080
S12	RDHW0803M0-MD03 F40M	0,050	0,060	0,080
S13	RDHW0803M0-MD03 F40M	0,044	0,050	0,070
H5	RDKW0803M0T-MD05 F15M	0,055	0,060	0,080
H8	RDKW0803M0T-MD05 F15M	0,042	0,048	0,065
H11	RDKW0803M0T-MD05 F15M	0,055	0,060	0,080
H12	RDKW0803M0T-MD05 F15M	0,055	0,060	0,080
H21	RDKW0803M0T-MD05 F15M	0,042	0,048	0,065

SMG = Seco material group
f_z = mm/tooth
v_c= m/min
a_r/D_c = %
All cutting data are start values

335.18/335.29 Round 8 - Cutting data v_c = (m/min)

	MP2500			MP3000			T350M			F15M			F25M			F30M		
SMG	30%	20%	10%	30%	20%	10%	30%	20%	10%	30%	20%	10%	30%	20%	10%	30%	20%	10%
P1	290	310	340	285	305	340	320	340	375	265	280	310	240	255	285	240	255	285
P2	285	300	335	280	295	325	315	330	365	260	275	305	235	250	280	235	250	275
P3	245	260	285	245	260	285	270	290	315	225	235	260	205	220	240	205	215	240
P4	215	230	255	215	225	250	240	255	280	195	210	235	180	190	215	180	190	210
P5	205	220	245	205	215	240	230	240	265	190	200	225	175	185	205	170	180	205
P6	235	250	275	230	245	270	255	270	300	210	225	250	195	210	230	190	205	230
P7	220	235	260	215	235	255	240	255	285	200	215	235	185	195	215	180	195	215
P8	205	220	240	205	215	240	225	240	265	190	200	220	175	185	200	170	180	200
P11	215	230	250	210	225	250	235	250	275	195	210	230	180	190	210	175	190	210
M1	205	215	240	210	220	245	240	255	280	210	220	245	190	200	225	190	200	220
M2	165	180	195	170	180	200	195	210	230	170	180	200	155	165	185	155	165	185
M3	130	140	155	135	145	160	155	165	180	135	145	160	125	130	145	125	130	145
M4	100	110	120	105	110	120	115	125	140	105	110	120	95	100	110	95	100	110
M5	85	90	100	85	90	100	100	105	115	85	90	100	80	85	95	80	85	90
K1	225	240	265	220	235	260	250	260	290	205	215	240	185	200	220	185	200	215
K2	195	210	230	195	205	230	215	230	255	180	190	210	165	175	195	165	175	195
K3	165	180	195	165	175	195	185	195	215	150	160	180	140	150	165	140	145	165
K4	160	170	190	155	165	185	175	185	205	145	155	170	130	140	155	130	140	155
K5	95	105	115	95	100	110	105	110	125	90	95	105	80	85	95	80	85	95
K6	140	150	165	140	145	165	155	165	180	125	135	150	115	125	140	115	125	135
K7	125	130	145	120	130	145	135	145	160	115	120	130	105	110	120	105	110	120
N1	840	890	990	830	890	980	—	—	—	760	810	900	700	740	830	700	750	820
N2	680	720	800	670	720	790	—	—	—	620	660	730	570	600	670	560	610	660
N3	455	480	530	450	480	530	—	—	—	410	435	485	380	400	445	375	405	440
N11	520	550	610	510	550	600	—	—	—	470	500	550	430	460	510	430	460	500
S1	50	50	60	48	50	55	55	60	65	48	50	55	44	47	50	44	47	50
S2	40	42	47	39	41	45	44	47	50	39	41	46	36	38	42	35	38	41
S3	35	37	41	34	36	39	39	41	45	34	36	40	31	33	36	31	33	36
S11	70	75	80	70	70	80	80	85	90	70	70	80	60	65	75	60	65	70
S12	49	50	60	48	50	55	55	60	65	48	50	55	44	46	50	43	46	50
S13	39	41	46	38	40	44	43	46	50	38	40	44	35	37	41	34	37	40
H5	40	43	48	41	43	48	48	50	55	40	43	48	37	40	44	36	39	43
H8	42	45	49	42	45	49	49	50	60	42	45	49	38	41	45	38	40	44
H11	50	55	60	50	55	60	60	65	70	50	55	60	47	50	55	47	50	55
H12	85	90	100	85	90	100	100	105	115	85	90	100	75	80	90	75	80	90
H21	42	45	49	42	45	49	49	50	60	42	45	49	38	41	45	38	40	44

335.18/335.29 Round 8 - Cutting data v_c = (m/min)

	F40M			MK2050			MS2050			MS2500			H25		
SMG	30%	20%	10%	30%	20%	10%	30%	20%	10%	30%	20%	10%	30%	20%	10%
P1	230	245	270	285	305	335	100	95	90	315	335	375	—	—	—
P2	225	235	260	280	295	330	95	95	100	310	330	365	—	—	—
P3	195	205	230	245	255	285	75	75	75	270	285	315	—	—	—
P4	170	180	200	215	225	255	65	65	65	235	250	280	—	—	—
P5	165	175	195	205	220	240	65	65	60	225	240	265	—	—	—
P6	185	195	215	230	245	270	70	65	65	255	270	300	—	—	—
P7	175	185	205	215	230	255	65	60	60	240	255	285	—	—	—
P8	165	175	190	205	215	240	65	65	65	225	240	265	—	—	—
P11	170	180	200	210	225	250	65	60	60	235	250	275	—	—	—
M1	180	190	210	—	—	—	85	80	85	220	235	260	—	—	—
M2	145	155	175	—	—	—	60	60	55	180	195	215	—	—	—
M3	115	125	135	—	—	—	33	34	34	145	150	170	—	—	—
M4	90	95	105	—	—	—	20	19	21	110	115	130	—	—	—
M5	75	80	85	—	—	—	17	16	17	90	100	110	—	—	—
K1	175	190	205	300	320	355	95	95	100	245	260	290	—	—	—
K2	155	165	185	265	285	310	75	75	70	215	230	255	—	—	—
K3	130	140	155	225	240	265	65	65	60	180	195	215	—	—	—
K4	125	135	150	215	230	250	60	60	55	175	185	205	—	—	—
K5	75	80	90	130	140	150	30	30	29	105	115	125	—	—	—
K6	110	115	130	190	200	220	55	55	50	155	165	180	—	—	—
K7	100	105	115	165	180	195	38	39	37	135	145	160	—	—	—
N1	660	710	780	—	—	—	—	—	—	—	—	—	780	830	910
N2	540	580	630	—	—	—	—	—	—	—	—	—	630	670	740
N3	360	385	420	—	—	—	—	—	—	—	—	—	420	445	490
N11	410	440	480	—	—	—	—	—	—	—	—	—	480	510	560
S1	42	44	49	—	—	—	55	55	60	55	55	65	—	—	—
S2	34	36	39	—	—	—	43	44	46	43	46	50	—	—	—
S3	29	31	34	—	—	—	37	38	40	38	40	44	—	—	—
S11	60	60	70	—	—	—	75	80	85	75	80	90	—	—	—
S12	41	44	48	—	—	—	60	60	65	55	55	65	—	—	—
S13	33	35	38	—	—	—	46	47	50	42	45	50	—	—	—
H5	35	37	41	—	—	—	—	—	—	44	47	50	—	—	—
H8	36	38	42	—	—	—	—	—	—	45	48	55	—	—	—
H11	45	47	50	—	—	—	—	—	—	55	60	65	—	—	—
H12	70	75	85	—	—	—	—	—	—	90	95	105	—	—	—
H21	36	38	42	—	—	—	—	—	—	45	48	55	—	—	—

335.18/335.29 Round 10 - Insert selection

SMG		f_z		
		30%	20%	10%
P1	RDHT10T3M0T-M05 F40M	0,085	0,095	0,13
P2	RDHT10T3M0T-M05 F40M	0,085	0,095	0,13
P3	RDHT10T3M0T-M05 F40M	0,080	0,090	0,12
P4	RDHT10T3M0T-M05 F40M	0,080	0,090	0,12
P5	RDHT10T3M0T-M05 F40M	0,075	0,090	0,12
P6	RDHT10T3M0T-M05 F40M	0,075	0,085	0,12
P7	RDKW10T3M0T-MD06 MP2500	0,090	0,10	0,14
P8	RDKW10T3M0T-MD06 MP2500	0,095	0,11	0,15
P11	RDHT10T3M0T-M07 F40M	0,11	0,12	0,16
M1	RDHT10T3M0T-M05 F40M	0,085	0,095	0,13
M2	RDHT10T3M0T-M05 F40M	0,075	0,090	0,12
M3	RDHT10T3M0T-M05 F40M	0,060	0,070	0,095
M4	RDHT10T3M0T-M05 F40M	0,055	0,060	0,080
M5	RDHT10T3M0T-M05 F40M	0,055	0,060	0,080
K1	RDKW10T3M0T-MD06 MK2050	0,10	0,12	0,16
K2	RDKW10T3M0T-MD06 MK2050	0,090	0,11	0,14
K3	RDKW10T3M0T-MD06 MK2050	0,090	0,11	0,14
K4	RDKW10T3M0T-MD06 MK2050	0,090	0,11	0,14
K5	RDKW10T3M0T-MD06 MK2050	0,085	0,095	0,13
K6	RDKW10T3M0T-MD06 MK2050	0,090	0,11	0,14
K7	RDKW10T3M0T-MD06 MK2050	0,085	0,095	0,13
N1	RDHT10T3M0-E04 H25	0,085	0,10	0,13
N2	RDHT10T3M0-E04 H25	0,085	0,10	0,13
N3	RDHT10T3M0-E04 H25	0,085	0,10	0,13
N11	RDHT10T3M0-E04 H25	0,085	0,10	0,13
S1	RDHT10T3M0T-M05 F40M	0,055	0,060	0,080
S2	RDHT10T3M0T-M05 F40M	0,055	0,060	0,080
S3	RDHT10T3M0T-M05 F40M	0,050	0,055	0,075
S11	RDHT10T3M0T-M05 F40M	0,060	0,070	0,095
S12	RDHT10T3M0T-M05 F40M	0,060	0,070	0,095
S13	RDHT10T3M0T-M05 F40M	0,055	0,060	0,080
H5	RDKW10T3M0T-MD06 F15M	0,065	0,070	0,095
H8	RDKW10T3M0T-MD06 F15M	0,048	0,055	0,075
H11	RDKW10T3M0T-MD06 F15M	0,065	0,070	0,095
H12	RDKW10T3M0T-MD06 F15M	0,065	0,070	0,095
H21	RDKW10T3M0T-MD06 F15M	0,048	0,055	0,075

SMG = Seco material group
f_z = mm/tooth
v_c= m/min
a_r/D_c = %
All cutting data are start values

335.18/335.29 Round 10 - Cutting data v_c = (m/min)

	MP1500			MP2500			T350M			F15M			F30M			F40M		
SMG	30%	20%	10%	30%	20%	10%	30%	20%	10%	30%	20%	10%	30%	20%	10%	30%	20%	10%
P1	315	340	370	325	345	380	280	300	330	250	270	300	240	255	285	245	265	290
P2	305	325	355	315	340	370	275	295	325	245	260	290	230	250	275	240	255	280
P3	265	285	310	275	295	325	240	255	280	215	230	250	200	215	235	210	220	245
P4	235	250	280	240	260	285	210	225	250	190	200	225	180	190	210	185	195	215
P5	225	240	265	235	245	275	205	215	235	180	190	215	170	185	200	175	185	205
P6	255	275	300	260	280	305	230	245	265	205	220	240	195	205	225	200	210	230
P7	240	255	280	245	265	290	215	230	250	195	205	225	180	195	215	185	200	220
P8	225	240	260	230	245	275	200	215	235	180	190	210	170	180	200	175	185	205
P11	235	250	275	240	255	280	210	225	245	185	200	220	175	190	205	180	195	215
M1	—	—	—	225	245	265	210	225	250	200	210	230	185	200	220	190	205	225
M2	—	—	—	190	200	220	175	185	205	165	175	190	155	165	180	160	170	185
M3	—	—	—	150	160	175	140	150	160	130	140	155	120	130	145	125	135	150
M4	—	—	—	115	120	135	105	115	125	100	105	115	95	100	110	95	105	115
M5	—	—	—	95	100	110	90	95	105	85	90	100	75	85	90	80	85	95
K1	240	255	285	250	270	295	215	235	255	195	205	230	185	200	220	190	205	225
K2	215	225	250	220	235	260	195	205	225	175	180	205	165	175	190	170	180	195
K3	180	190	215	190	200	220	165	175	190	145	155	170	140	145	160	140	150	165
K4	175	180	205	180	190	210	155	165	180	140	145	165	130	140	155	135	145	160
K5	105	110	125	110	115	125	95	100	110	85	90	100	80	85	95	80	85	95
K6	155	160	180	160	165	185	135	145	160	125	130	145	115	125	135	120	125	140
K7	135	145	155	140	145	160	120	130	140	110	115	125	100	110	120	105	110	125
N1	—	—	—	930	1000	1125	—	—	—	730	780	860	700	740	820	710	760	840
N2	—	—	—	750	810	900	—	—	—	590	630	690	560	600	660	570	620	680
N3	—	—	—	500	540	600	—	—	—	390	415	460	375	400	445	380	410	455
N11	—	—	—	570	620	690	—	—	—	445	475	530	430	455	510	435	470	520
S1	—	—	—	55	60	65	49	55	60	47	50	55	43	46	50	45	48	55
S2	—	—	—	44	48	55	40	43	47	37	40	44	35	37	41	36	39	43
S3	—	—	—	39	42	46	35	37	41	33	35	39	31	32	36	32	34	37
S11	—	—	—	80	85	90	70	75	80	65	70	80	60	65	70	65	70	75
S12	—	—	—	55	60	65	49	50	60	46	49	55	43	46	50	45	48	50
S13	—	—	—	43	46	50	39	42	46	36	39	43	34	36	40	35	38	42
H5	48	50	55	46	48	55	44	46	50	39	42	46	36	39	43	38	40	44
H8	50	55	60	47	50	55	45	48	55	41	43	48	38	40	44	39	42	46
H11	60	65	75	60	60	70	55	60	65	50	55	60	47	50	55	49	50	55
H12	100	105	120	95	100	110	90	95	105	80	85	95	75	80	90	80	85	90
H21	50	55	60	47	50	55	45	48	55	41	43	48	38	40	44	39	42	46

335.18/335.29 Round 10 - Cutting data v_c = (m/min)

	MK2050			MM4500			MS2050			MS2500			MH1000			H25		
SMG	30%	20%	10%	30%	20%	10%	30%	20%	10%	30%	20%	10%	30%	20%	10%	30%	20%	10%
P1	275	295	325	200	215	235	145	140	145	355	380	415	305	330	360	—	—	—
P2	265	280	310	195	205	230	140	135	140	345	370	405	295	315	345	—	—	—
P3	230	245	270	170	180	200	115	110	115	300	320	355	260	275	305	—	—	—
P4	205	220	245	150	160	175	100	100	100	265	280	310	230	245	270	—	—	—
P5	195	210	230	145	150	165	90	95	95	255	270	295	220	230	260	—	—	—
P6	220	240	260	160	170	190	100	100	105	285	305	335	245	265	290	—	—	—
P7	210	225	245	150	160	175	95	95	100	270	290	315	235	250	275	—	—	—
P8	195	210	230	140	150	165	95	95	95	250	270	295	215	230	255	—	—	—
P11	205	220	240	150	160	170	95	90	100	260	280	305	225	245	265	—	—	—
M1	—	—	—	165	180	195	125	120	125	245	265	290	—	—	—	—	—	—
M2	—	—	—	135	145	160	90	90	95	205	215	240	—	—	—	—	—	—
M3	—	—	—	110	115	125	50	50	55	160	170	190	—	—	—	—	—	—
M4	—	—	—	85	90	100	35	32	32	125	130	145	—	—	—	—	—	—
M5	—	—	—	70	75	80	29	26	26	105	110	120	—	—	—	—	—	—
K1	290	305	335	—	—	—	140	135	145	270	290	320	235	250	275	—	—	—
K2	255	270	300	—	—	—	110	115	115	240	255	280	210	220	245	—	—	—
K3	215	225	255	—	—	—	90	95	95	205	215	240	175	185	205	—	—	—
K4	205	215	240	—	—	—	90	90	95	195	205	230	170	180	200	—	—	—
K5	125	135	145	—	—	—	49	48	50	120	125	140	100	110	120	—	—	—
K6	180	190	215	—	—	—	80	80	80	170	180	200	150	155	175	—	—	—
K7	160	170	185	—	—	—	60	60	65	150	160	175	130	140	155	—	—	—
N1	—	—	—	—	—	—	—	—	—	—	—	—	—	—	—	730	780	860
N2	—	—	—	—	—	—	—	—	—	—	—	—	—	—	—	590	630	690
N3	—	—	—	—	—	—	—	—	—	—	—	—	—	—	—	395	415	465
N11	—	—	—	—	—	—	—	—	—	—	—	—	—	—	—	450	475	530
S1	—	—	—	25	27	30	60	60	65	60	65	70	—	—	—	—	—	—
S2	—	—	—	20	22	24	48	50	55	48	50	55	—	—	—	—	—	—
S3	—	—	—	18	19	21	42	43	46	42	45	50	—	—	—	—	—	—
S11	—	—	—	36	38	42	85	90	95	85	90	100	—	—	—	—	—	—
S12	—	—	—	28	30	32	65	70	75	60	65	70	—	—	—	—	—	—
S13	—	—	—	22	23	26	50	55	55	47	50	55	—	—	—	—	—	—
H5	—	—	—	—	—	—	—	—	—	49	50	60	47	50	55	—	—	—
H8	—	—	—	—	—	—	—	—	—	50	55	60	49	50	60	—	—	—
H11	—	—	—	—	—	—	—	—	—	65	65	75	60	65	70	—	—	—
H12	—	—	—	—	—	—	—	—	—	100	110	120	95	105	115	—	—	—
H21	—	—	—	—	—	—	—	—	—	50	55	60	49	50	60	—	—	—

335.18/335.29 - Insert selection

SMG		f_z		
		30%	20%	10%
P1	RPHT1204M0T-6-ME07 F40M	0,12	0,13	0,18
P2	RPHT1204M0T-6-ME07 F40M	0,12	0,13	0,18
P3	RPHT1204M0T-6-M08 F40M	0,13	0,15	0,19
P4	RPHT1204M0T-6-M08 F40M	0,12	0,14	0,19
P5	RPHT1204M0T-6-M08 F40M	0,12	0,14	0,19
P6	RPHT1204M0T-6-M08 F40M	0,12	0,14	0,19
P7	RPHT1204M0T-6-M08 MP2500	0,12	0,14	0,19
P8	RPHT1204M0T-6-M08 MP2500	0,13	0,15	0,19
P11	RPHT1204M0T-6-M08 F40M	0,12	0,14	0,19
M1	RPHT1204M0T-6-ME07 F40M	0,12	0,13	0,18
M2	RPHT1204M0T-6-ME07 F40M	0,11	0,12	0,16
M3	RPHT1204M0T-6-M08 F40M	0,10	0,11	0,15
M4	RPHT1204M0T-6-M08 F40M	0,085	0,10	0,13
M5	RPHT1204M0T-6-M08 F40M	0,085	0,10	0,13
K1	RPKW1204M0T-6-MD10 MK2050	0,17	0,19	0,26
K2	RPKW1204M0T-6-MD10 MK2050	0,15	0,18	0,24
K3	RPKW1204M0T-6-MD10 MK2050	0,15	0,18	0,24
K4	RPKW1204M0T-6-MD10 MK2050	0,15	0,18	0,24
K5	RPKW1204M0T-6-MD10 MK2050	0,14	0,16	0,22
K6	RPKW1204M0T-6-MD10 MK2050	0,15	0,18	0,24
K7	RPKW1204M0T-6-MD10 MK2050	0,14	0,16	0,22
N1	RPHT1204M0-6-E05 H25	0,11	0,12	0,16
N2	RPHT1204M0-6-E05 H25	0,11	0,12	0,16
N3	RPHT1204M0-6-E05 H25	0,11	0,12	0,16
N11	RPHT1204M0-6-E05 H25	0,11	0,12	0,16
S1	RPHT1204M0T-6-M08 F40M	0,085	0,10	0,13
S2	RPHT1204M0T-6-M08 F40M	0,085	0,10	0,13
S3	RPHT1204M0T-6-M08 F40M	0,080	0,090	0,12
S11	RPHT1204M0T-6-ME07 F40M	0,085	0,10	0,13
S12	RPHT1204M0T-6-ME07 F40M	0,085	0,10	0,13
S13	RPHT1204M0T-6-M08 F40M	0,085	0,10	0,13
H5	RPHW1204M0T-6-MD12 MH1000	0,12	0,14	0,19
H8	RPHW1204M0T-6-MD12 MH1000	0,095	0,11	0,15
H11	RPHT1204M0T-6-M13 T350M	0,14	0,15	0,20
H12	RPHT1204M0T-6-M13 T350M	0,14	0,15	0,20
H21	RPHW1204M0T-6-MD12 MH1000	0,095	0,11	0,15

SMG = Seco material group
f_z = mm/tooth
v_c= m/min
a_r/D_c = %
All cutting data are start values

335.18/335.29 - Cutting data v_c = (m/min)

	MP2500			MP3000			T350M			F40M		
SMG	30%	20%	10%	30%	20%	10%	30%	20%	10%	30%	20%	10%
P1	285	305	340	265	285	315	250	265	295	220	230	255
P2	280	300	330	260	280	305	245	260	290	210	225	250
P3	240	255	285	225	240	265	210	225	250	180	195	220
P4	215	230	255	200	215	235	190	200	220	165	175	190
P5	205	220	240	190	205	225	180	190	210	155	165	185
P6	230	245	270	215	230	250	200	215	235	175	185	205
P7	220	230	255	205	215	235	190	205	225	165	175	195
P8	200	215	240	190	205	225	175	190	210	155	165	185
P11	210	225	250	200	210	230	185	195	215	160	170	190
M1	200	215	240	195	210	230	190	200	220	170	180	200
M2	165	175	195	160	170	185	155	165	180	140	150	165
M3	130	140	155	125	135	150	125	130	145	110	120	130
M4	100	110	120	95	105	115	95	100	110	85	90	100
M5	85	90	100	80	85	95	80	85	95	70	75	85
K1	220	235	260	205	220	240	—	—	—	170	180	200
K2	195	210	230	180	195	215	—	—	—	150	160	175
K3	165	175	195	155	165	180	—	—	—	125	135	145
K4	160	170	185	145	155	170	—	—	—	120	125	140
K5	95	100	115	90	95	105	—	—	—	75	75	85
K6	140	150	165	130	135	150	—	—	—	105	110	125
K7	125	130	145	115	120	135	—	—	—	95	100	110
N1	—	—	—	—	—	—	—	—	—	620	660	740
N2	—	—	—	—	—	—	—	—	—	500	530	590
N3	—	—	—	—	—	—	—	—	—	335	355	395
N11	—	—	—	—	—	—	—	—	—	380	405	450
S1	—	—	—	45	49	55	44	47	50	40	43	48
S2	—	—	—	36	39	43	36	38	42	33	35	38
S3	—	—	—	32	34	38	31	33	37	28	30	34
S11	—	—	—	65	70	75	60	65	75	55	60	65
S12	—	—	—	45	48	55	43	47	50	40	43	47
S13	—	—	—	35	38	42	35	37	41	32	34	37
H5	41	44	48	39	41	45	39	42	46	34	36	40
H8	43	46	50	40	43	47	41	44	49	36	38	42
H11	50	55	60	50	50	60	50	55	60	43	46	50
H12	80	85	90	75	80	85	75	80	90	65	70	75
H21	43	46	50	40	43	47	41	44	49	36	38	42

335.18/335.29 - Cutting data v_c = (m/min)

	MK2050			MM4500			MS2050			H25		
SMG	30%	20%	10%	30%	20%	10%	30%	20%	10%	30%	20%	10%
P1	235	255	280	175	190	210	—	—	—	—	—	—
P2	230	245	270	170	185	205	—	—	—	—	—	—
P3	200	215	240	150	160	175	—	—	—	—	—	—
P4	175	190	210	135	140	155	—	—	—	—	—	—
P5	170	180	200	125	135	150	—	—	—	—	—	—
P6	190	205	225	140	150	165	—	—	—	—	—	—
P7	180	195	210	135	145	155	—	—	—	—	—	—
P8	170	180	200	125	135	150	—	—	—	—	—	—
P11	175	190	205	130	140	155	—	—	—	—	—	—
M1	—	—	—	145	155	175	160	165	170	—	—	—
M2	—	—	—	120	130	140	125	130	135	—	—	—
M3	—	—	—	95	105	115	85	85	85	—	—	—
M4	—	—	—	75	80	90	55	55	55	—	—	—
M5	—	—	—	60	65	75	47	48	47	—	—	—
K1	245	265	290	—	—	—	—	—	—	—	—	—
K2	220	235	260	—	—	—	—	—	—	—	—	—
K3	185	200	220	—	—	—	—	—	—	—	—	—
K4	180	190	210	—	—	—	—	—	—	—	—	—
K5	110	115	125	—	—	—	—	—	—	—	—	—
K6	155	165	185	—	—	—	—	—	—	—	—	—
K7	140	150	165	—	—	—	—	—	—	—	—	—
N1	—	—	—	—	—	—	—	—	—	670	730	800
N2	—	—	—	—	—	—	—	—	—	540	590	650
N3	—	—	—	—	—	—	—	—	—	365	390	435
N11	—	—	—	—	—	—	—	—	—	415	450	495
S1	—	—	—	23	24	27	55	55	60	—	—	—
S2	—	—	—	18	20	22	44	45	49	—	—	—
S3	—	—	—	16	17	19	38	40	43	—	—	—
S11	—	—	—	32	34	38	75	80	85	—	—	—
S12	—	—	—	25	26	29	55	60	65	—	—	—
S13	—	—	—	20	21	23	47	49	55	—	—	—
H5	—	—	—	—	—	—	—	—	—	—	—	—
H8	—	—	—	—	—	—	—	—	—	—	—	—
H11	—	—	—	—	—	—	—	—	—	—	—	—
H12	—	—	—	—	—	—	—	—	—	—	—	—
H21	—	—	—	—	—	—	—	—	—	—	—	—

335.18 Round 16 - Insert selection

SMG		f_z		
		30%	20%	10%
P1	RPHT1605M0T-ME11 F40M	0,18	0,22	0,28
P2	RPHT1605M0T-ME11 F40M	0,19	0,22	0,28
P3	RPHT1605M0T-ME11 F40M	0,18	0,20	0,28
P4	RPHT1605M0T-M12 F40M	0,19	0,22	0,30
P5	RPHT1605M0T-M12 F40M	0,19	0,22	0,28
P6	RPHT1605M0T-M12 F40M	0,18	0,22	0,28
P7	RPHT1605M0T-M12 MP2500	0,18	0,22	0,28
P8	RPHT1605M0T-M12 MP2500	0,19	0,22	0,30
P11	RPHT1605M0T-M12 F40M	0,18	0,22	0,28
M1	RPHT1605M0T-ME11 F40M	0,19	0,22	0,28
M2	RPHT1605M0T-ME11 F40M	0,17	0,20	0,26
M3	RPHT1605M0T-M12 F40M	0,15	0,17	0,22
M4	RPHT1605M0T-M12 F40M	0,13	0,15	0,20
M5	RPHT1605M0T-M12 F40M	0,13	0,15	0,20
K1	RPHT1605M0T-M18 MK2050	0,26	0,30	0,40
K2	RPHT1605M0T-M18 MK2050	0,24	0,26	0,36
K3	RPHT1605M0T-M18 MK2050	0,24	0,26	0,36
K4	RPHT1605M0T-M18 MK2050	0,24	0,26	0,36
K5	RPHT1605M0T-M18 MK2050	0,20	0,24	0,32
K6	RPHT1605M0T-M18 MK2050	0,24	0,26	0,36
K7	RPHT1605M0T-M18 MK2050	0,20	0,24	0,32
N1	RPKT1605M0T-ME11 F40M	0,24	0,28	0,36
N2	RPKT1605M0T-ME11 F40M	0,24	0,28	0,36
N3	RPKT1605M0T-ME11 F40M	0,24	0,28	0,36
N11	RPKT1605M0T-ME11 F40M	0,24	0,28	0,36
S1	RPHT1605M0T-M12 F40M	0,13	0,15	0,20
S2	RPHT1605M0T-M12 F40M	0,13	0,15	0,20
S3	RPHT1605M0T-M12 F40M	0,12	0,14	0,19
S11	RPHT1605M0T-ME11 F40M	0,14	0,16	0,20
S12	RPHT1605M0T-ME11 F40M	0,14	0,16	0,20
H5	RPKW1605M0T-MD20 F15M	0,22	0,24	0,32
H8	RPKW1605M0T-MD20 F15M	0,16	0,19	0,24
H11	RPKW1605M0T-MD20 F15M	0,22	0,24	0,32
H12	RPKW1605M0T-MD20 F15M	0,22	0,24	0,32
H21	RPKW1605M0T-MD20 F15M	0,16	0,19	0,24

SMG = Seco material group
f_z = mm/tooth
v_c= m/min
a_r/D_c = %
All cutting data are start values

335.18 Round 16 - Cutting data v_c = (m/min)

	MP1500			MP2500			MP3000			T350M			F15M			F25M		
SMG	30%	20%	10%	30%	20%	10%	30%	20%	10%	30%	20%	10%	30%	20%	10%	30%	20%	10%
P1	270	295	325	260	275	310	245	260	290	225	240	270	180	195	215	200	220	240
P2	265	285	315	255	265	295	235	250	280	220	235	260	175	185	210	195	210	230
P3	235	250	275	220	235	260	205	220	245	190	205	225	155	165	180	170	185	200
P4	205	220	245	195	205	230	180	195	215	170	180	200	135	145	160	150	160	180
P5	195	215	235	185	200	220	175	190	205	160	170	195	130	140	155	145	155	175
P6	220	240	260	210	220	250	200	210	230	185	195	215	150	155	175	160	175	195
P7	205	225	250	200	210	235	185	200	220	175	185	205	140	150	165	155	165	185
P8	195	210	230	185	200	220	175	185	205	160	170	190	130	135	155	145	155	170
P11	200	220	240	195	205	230	180	195	215	170	175	200	135	145	160	150	160	180
M1	—	—	—	180	190	215	175	190	210	170	180	200	140	150	170	155	170	185
M2	—	—	—	150	160	180	145	155	175	140	150	165	115	125	140	130	140	155
M3	—	—	—	120	130	145	115	125	140	115	120	135	95	105	115	105	115	125
M4	—	—	—	95	100	110	90	95	105	85	95	105	75	80	90	85	90	100
M5	—	—	—	80	85	90	75	80	90	75	80	85	60	65	75	70	75	80
K1	210	225	250	200	210	235	185	200	225	175	185	205	140	150	170	155	165	185
K2	185	200	220	175	190	210	165	180	195	155	165	185	125	135	145	135	150	165
K3	155	170	190	150	160	180	140	150	165	130	140	155	105	110	125	115	125	140
K4	150	165	180	140	150	170	135	145	160	125	130	150	100	105	120	110	120	130
K5	95	100	110	85	95	105	80	85	95	75	80	90	60	65	75	70	75	80
K6	130	145	160	125	135	150	120	125	140	110	115	130	85	95	105	100	105	115
K7	120	125	140	110	120	130	105	110	125	95	105	115	80	85	95	90	95	105
N1	—	—	—	730	790	870	700	750	830	—	—	—	510	540	610	570	610	680
N2	—	—	—	590	630	700	570	600	670	—	—	—	410	440	490	465	490	550
N3	—	—	—	395	425	470	380	400	445	—	—	—	270	295	330	310	330	365
N11	—	—	—	450	485	540	430	460	510	—	—	—	310	335	375	355	375	415
S1	—	—	—	46	49	55	42	45	50	41	44	48	35	38	41	39	41	46
S2	—	—	—	37	39	43	34	36	40	33	35	39	28	30	33	31	33	37
S3	—	—	—	32	34	38	30	32	35	29	31	34	25	26	30	27	29	32
S11	—	—	—	65	70	75	60	65	70	55	60	70	49	50	60	55	55	65
S12	—	—	—	45	48	55	41	45	49	40	43	48	34	37	40	37	40	45
S13	—	—	—	36	38	42	33	35	39	32	34	38	27	30	32	30	32	36
H5	44	47	50	37	40	44	36	38	42	36	38	42	29	31	35	32	35	38
H8	47	50	55	40	42	47	37	40	44	38	41	45	32	33	38	35	37	41
H11	55	60	65	48	50	55	46	49	55	46	49	55	37	40	45	41	45	49
H12	90	95	110	75	80	90	75	80	85	75	80	90	60	65	70	65	70	80
H21	47	50	55	40	42	47	37	40	44	38	41	45	32	33	38	35	37	41

335.18 Round 16 - Cutting data v_c = (m/min)

	F30M			F40M			MK2050			MM4500			MS2500			MH1000		
SMG	30%	20%	10%	30%	20%	10%	30%	20%	10%	30%	20%	10%	30%	20%	10%	30%	20%	10%
P1	205	220	245	195	210	235	235	260	285	160	170	190	285	300	335	220	235	260
P2	195	210	235	190	200	225	230	245	275	155	165	180	275	290	325	210	225	255
P3	175	185	205	165	180	195	205	215	240	135	145	160	240	255	280	185	195	220
P4	150	165	180	145	155	175	180	190	215	120	125	140	210	225	250	165	175	195
P5	150	160	175	140	150	170	170	185	205	115	120	135	200	215	240	155	170	185
P6	165	175	195	160	170	190	190	210	230	130	135	155	230	240	270	180	190	210
P7	155	165	185	150	160	180	180	195	215	120	130	145	215	230	255	170	180	200
P8	145	155	170	140	150	165	170	180	200	115	120	135	200	215	235	155	165	185
P11	150	160	180	145	155	175	175	190	210	120	125	140	210	220	250	165	175	195
M1	160	170	190	155	165	180	—	—	—	135	140	155	195	210	230	—	—	—
M2	135	140	155	125	135	150	—	—	—	110	115	130	160	175	195	—	—	—
M3	105	115	125	100	110	120	—	—	—	90	95	105	130	140	155	—	—	—
M4	80	85	95	80	85	95	—	—	—	70	75	80	100	110	120	—	—	—
M5	70	75	80	65	70	80	—	—	—	55	60	65	85	90	100	—	—	—
K1	155	165	190	150	160	175	250	265	295	—	—	—	220	230	255	170	180	205
K2	140	150	165	135	140	160	220	240	265	—	—	—	190	205	230	150	160	180
K3	120	125	140	115	120	135	185	205	225	—	—	—	160	175	195	125	135	150
K4	115	120	135	110	115	130	180	195	215	—	—	—	155	165	185	120	130	145
K5	70	75	80	65	70	80	110	120	130	—	—	—	95	100	110	75	80	90
K6	100	105	115	95	100	115	155	170	190	—	—	—	135	145	165	105	115	125
K7	90	95	105	85	90	100	145	150	170	—	—	—	120	130	145	95	100	115
N1	590	630	700	560	590	660	—	—	—	—	—	—	—	—	—	—	—	—
N2	475	510	560	450	480	530	—	—	—	—	—	—	—	—	—	—	—	—
N3	315	335	375	300	320	355	—	—	—	—	—	—	—	—	—	—	—	—
N11	365	385	430	340	365	405	—	—	—	—	—	—	—	—	—	—	—	—
S1	38	41	45	37	40	44	—	—	—	21	22	25	50	55	60	—	—	—
S2	31	33	36	30	32	35	—	—	—	17	18	20	40	43	47	—	—	—
S3	27	29	32	26	28	31	—	—	—	15	16	17	35	37	41	—	—	—
S11	55	60	65	50	55	60	—	—	—	29	31	35	70	75	85	—	—	—
S12	37	40	44	36	39	43	—	—	—	22	24	27	49	50	60	—	—	—
S13	30	32	35	29	31	34	—	—	—	18	19	21	39	42	46	—	—	—
H5	32	34	38	31	33	37	—	—	—	—	—	—	40	43	48	35	38	42
H8	34	36	39	33	35	39	—	—	—	—	—	—	43	46	50	38	40	45
H11	41	44	48	40	42	47	—	—	—	—	—	—	50	55	60	45	49	55
H12	65	70	80	65	70	75	—	—	—	—	—	—	85	90	100	70	80	85
H21	34	36	39	33	35	39	—	—	—	—	—	—	43	46	50	38	40	45

R395.19

T-slot milling

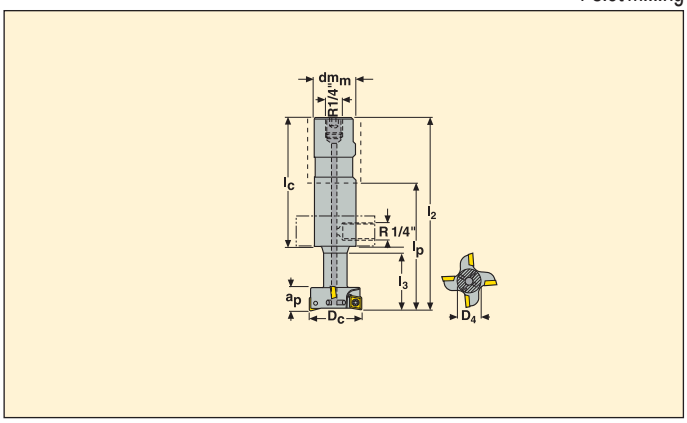

- For insert selection and cutting data recommendations, see page(s) 288-295
- For complete insert programme, see page(s) 602, 617

Part No.	Type of mounting	Dimensions in mm									Z_c*	KG		Insert
		a_p	D_c	D_4	dm_m	l_2	l_3	l_p	l_c					
R395.19 -3225.3-11A	Cyl.-Weldon	11	25	12	32	130	24	70	101	2	1	0,7	28400	CCMX060304
-3232.3-14A	Cyl.-Weldon	14	32	16	32	140	29	80	103	2	1	0,8	19800	CCMX08T308
-3240.3-18A	Cyl.-Weldon	18	40	20	32	150	41	90	104	4	2	0,8	14600	CCMX09T308
-3250.3-22A	Cyl.-Weldon	22	50	26	32	148	52	88	91	4	2	0,8	9800	SCET120612T

*Effective number of teeth

Insert geometry ME should never be used in these cutters

Spare Parts

For cutter	Key	Insert screw	Blank screw
	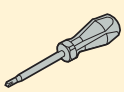		
R395.19-3225			
R395.19-3232-3240			
R395.19-3250			

Please check availability in current price and stock-list

Torque key and value, see page

Coolant inducer to be ordered separately, Part No. 416-033

T-slot CCMX06 - Insert selection

SMG		f_z	
		100%	25%
P1	CCMX060304-E06 F40M	0,085	0,095
P2	CCMX060304-E06 F40M	0,085	0,10
P3	CCMX060304-E06 F40M	0,080	0,095
P4	CCMX060304T-M07 F40M	0,095	0,11
P5	CCMX060304T-M07 F40M	0,090	0,11
P6	CCMX060304T-M07 F40M	0,090	0,10
P7	CCMX060304T-M07 F40M	0,090	0,10
P8	CCMX060304T-M07 F40M	0,095	0,11
P11	CCMX060304T-M07 F40M	0,090	0,10
M1	CCMX060304-E06 F40M	0,085	0,10
M2	CCMX060304-E06 F40M	0,080	0,090
M3	CCMX060304T-M07 F40M	0,075	0,085
M4	CCMX060304T-M07 F40M	0,065	0,075
M5	CCMX060304T-M07 F40M	0,065	0,075
K1	CCMX060304-E06 HX	0,085	0,10
K2	CCMX060304-E06 HX	0,080	0,090
K3	CCMX060304-E06 HX	0,080	0,090
K4	CCMX060304-E06 HX	0,080	0,090
K5	CCMX060304-E06 HX	0,070	0,080
K6	CCMX060304-E06 HX	0,080	0,090
K7	CCMX060304-E06 HX	0,070	0,080
N1	CCMX060304-E06 HX	0,11	0,13
N2	CCMX060304-E06 HX	0,11	0,13
N3	CCMX060304-E06 HX	0,11	0,13
N11	CCMX060304-E06 HX	0,11	0,13
S1	CCMX060304T-M07 F40M	0,065	0,075
S2	CCMX060304T-M07 F40M	0,065	0,075
S3	CCMX060304T-M07 F40M	0,060	0,070
S11	CCMX060304-E06 F40M	0,060	0,070
S12	CCMX060304-E06 F40M	0,060	0,070
S13	CCMX060304-E06 F40M	0,055	0,065
H5	CCMX060304T-M07 F40M	0,060	0,070
H8	CCMX060304T-M07 F40M	0,048	0,055
H11	CCMX060304T-M07 F40M	0,060	0,070
H12	CCMX060304T-M07 F40M	0,060	0,070
H21	CCMX060304T-M07 F40M	0,048	0,055

SMG = Seco material group
f_z = mm/tooth
v_c= m/min
a_e/D_c = %
All cutting data are start values

T-slot CCMX06 - Cutting data v_c = (m/min)

SMG	F40M		HX	
	100%	25%	100%	25%
P1	180	245	145	195
P2	175	235	140	190
P3	155	205	120	165
P4	135	185	110	145
P5	130	175	105	140
P6	145	195	115	160
P7	140	185	110	150
P8	130	175	105	140
P11	135	180	105	145
M1	140	190	115	155
M2	115	160	90	125
M3	95	125	75	100
M4	70	95	60	80
M5	60	80	48	65
K1	140	190	130	180
K2	120	165	115	160
K3	105	140	100	135
K4	100	135	95	130
K5	60	80	55	80
K6	85	120	80	115
K7	75	105	75	100
N1	510	700	485	660
N2	415	560	395	530
N3	275	375	260	355
N11	315	430	300	405
S1	34	45	—	—
S2	27	36	—	—
S3	24	32	—	—
S11	48	65	—	—
S12	33	45	—	—
S13	26	36	—	—
H5	28	38	22	31
H8	30	40	24	32
H11	36	49	29	39
H12	60	80	46	65
H21	30	40	24	32

T-slot CCMX08 - Insert selection

SMG		f_z	
		100%	25%
P1	CCMX08T308-E07 F40M	0,10	0,11
P2	CCMX08T308-E07 F40M	0,10	0,12
P3	CCMX08T308-E07 F40M	0,095	0,11
P4	CCMX08T308T-M08 F40M	0,11	0,12
P5	CCMX08T308T-M08 F40M	0,10	0,12
P6	CCMX08T308T-M08 F40M	0,10	0,12
P7	CCMX08T308T-M08 F40M	0,10	0,12
P8	CCMX08T308T-M08 F40M	0,11	0,13
P11	CCMX08T308T-M08 F40M	0,10	0,12
M1	CCMX08T308-E07 F40M	0,10	0,12
M2	CCMX08T308-E07 F40M	0,090	0,11
M3	CCMX08T308T-M08 F40M	0,085	0,095
M4	CCMX08T308T-M08 F40M	0,075	0,085
M5	CCMX08T308T-M08 F40M	0,075	0,085
K1	CCMX08T308-E07 HX	0,10	0,12
K2	CCMX08T308-E07 HX	0,090	0,11
K3	CCMX08T308-E07 HX	0,090	0,11
K4	CCMX08T308-E07 HX	0,090	0,11
K5	CCMX08T308-E07 HX	0,080	0,095
K6	CCMX08T308-E07 HX	0,090	0,11
K7	CCMX08T308-E07 HX	0,080	0,095
N1	CCMX08T308-E07 HX	0,13	0,15
N2	CCMX08T308-E07 HX	0,13	0,15
N3	CCMX08T308-E07 HX	0,13	0,15
N11	CCMX08T308-E07 HX	0,13	0,15
S1	CCMX08T308T-M08 T350M	0,075	0,085
S2	CCMX08T308T-M08 T350M	0,075	0,085
S3	CCMX08T308T-M08 T350M	0,070	0,080
S11	CCMX08T308-E07 F40M	0,075	0,085
S12	CCMX08T308-E07 F40M	0,075	0,085
S13	CCMX08T308-E07 F40M	0,065	0,075
H5	CCMX08T308T-M08 F40M	0,070	0,080
H8	CCMX08T308T-M08 F40M	0,055	0,065
H11	CCMX08T308T-M08 F40M	0,070	0,080
H12	CCMX08T308T-M08 F40M	0,070	0,080
H21	CCMX08T308T-M08 F40M	0,055	0,065

SMG = Seco material group
f_z = mm/tooth
v_c= m/min
a_r/D_c = %
All cutting data are start values

T-slot CCMX08 - Cutting data v_c = (m/min)

SMG	T350M		F40M		HX	
	100%	25%	100%	25%	100%	25%
P1	200	275	175	240	140	190
P2	195	260	170	230	135	180
P3	170	230	145	200	120	160
P4	150	205	130	175	105	140
P5	145	195	125	170	100	135
P6	160	225	140	195	115	155
P7	155	210	135	185	105	145
P8	140	195	125	170	100	135
P11	150	205	130	180	105	140
M1	150	200	135	185	110	145
M2	125	165	115	150	90	120
M3	100	135	90	125	70	100
M4	75	105	70	95	55	75
M5	65	85	60	80	46	65
K1	155	210	135	180	125	170
K2	135	185	120	160	115	150
K3	115	155	100	135	95	130
K4	110	150	95	130	90	125
K5	70	90	60	80	55	75
K6	95	130	85	115	80	110
K7	85	115	75	100	70	95
N1	—	—	490	670	465	640
N2	—	—	395	540	375	520
N3	—	—	265	365	250	345
N11	—	—	305	415	290	395
S1	36	49	33	44	—	—
S2	29	39	26	36	—	—
S3	25	34	23	31	—	—
S11	50	70	45	60	—	—
S12	35	48	32	44	—	—
S13	28	38	26	35	—	—
H5	32	43	28	37	22	30
H8	33	45	29	39	23	31
H11	41	55	35	48	28	38
H12	65	90	55	75	46	60
H21	33	45	29	39	23	31

T-slot CCMX09 - Insert selection

SMG		f_z	
		100%	25%
P1	CCMX09T308T-MD09 F40M	0,13	0,15
P2	CCMX09T308T-MD09 F40M	0,13	0,15
P3	CCMX09T308T-MD09 F40M	0,12	0,14
P4	CCMX09T308T-MD09 F40M	0,12	0,14
P5	CCMX09T308T-MD09 F40M	0,12	0,14
P6	CCMX09T308T-MD09 F40M	0,12	0,13
P7	CCMX09T308T-MD09 F40M	0,12	0,13
P8	CCMX09T308T-MD09 F40M	0,12	0,14
P11	CCMX09T308T-MD09 F40M	0,12	0,13
M1	CCMX09T308T-MD09 F40M	0,13	0,15
M2	CCMX09T308T-MD09 F40M	0,12	0,14
M3	CCMX09T308T-MD09 F40M	0,095	0,11
M4	CCMX09T308T-MD09 F40M	0,080	0,095
M5	CCMX09T308T-MD09 F40M	0,080	0,095
K1	CCMX09T308T-MD09 F40M	0,13	0,15
K2	CCMX09T308T-MD09 F40M	0,12	0,14
K3	CCMX09T308T-MD09 F40M	0,12	0,14
K4	CCMX09T308T-MD09 F40M	0,12	0,14
K5	CCMX09T308T-MD09 F40M	0,11	0,12
K6	CCMX09T308T-MD09 F40M	0,12	0,14
K7	CCMX09T308T-MD09 F40M	0,11	0,12
N1	CCMX09T308T-MD09 F40M	0,16	0,19
N2	CCMX09T308T-MD09 F40M	0,16	0,19
N3	CCMX09T308T-MD09 F40M	0,16	0,19
N11	CCMX09T308T-MD09 F40M	0,16	0,19
S1	CCMX09T308T-MD09 F40M	0,080	0,095
S2	CCMX09T308T-MD09 F40M	0,080	0,095
S3	CCMX09T308T-MD09 F40M	0,075	0,090
S11	CCMX09T308T-MD09 F40M	0,095	0,11
S12	CCMX09T308T-MD09 F40M	0,095	0,11
S13	CCMX09T308T-MD09 F40M	0,080	0,095
H5	CCMX09T308T-MD09 F40M	0,080	0,090
H8	CCMX09T308T-MD09 F40M	0,060	0,070
H11	CCMX09T308T-MD09 F40M	0,080	0,090
H12	CCMX09T308T-MD09 F40M	0,080	0,090
H21	CCMX09T308T-MD09 F40M	0,060	0,070

SMG = Seco material group
f_z = mm/tooth
v_c= m/min
a_r/D_c = %
All cutting data are start values

T-slot CCMX09 - Cutting data v_c = (m/min)

SMG	F40M	
	100%	25%
P1	140	195
P2	135	190
P3	120	165
P4	105	145
P5	100	140
P6	115	160
P7	105	150
P8	100	140
P11	105	145
M1	110	150
M2	90	125
M3	75	100
M4	60	80
M5	48	65
K1	110	150
K2	95	130
K3	80	110
K4	80	105
K5	47	65
K6	70	95
K7	60	85
N1	405	550
N2	325	445
N3	215	295
N11	250	340
S1	27	37
S2	22	30
S3	19	26
S11	37	50
S12	26	36
S13	21	29
H5	23	31
H8	24	33
H11	29	40
H12	47	65
H21	24	33

T-slot SCET12 - Insert selection

SMG		f_z	
		100%	25%
P1	SCET120612T-M11 F40M	0,15	0,18
P2	SCET120612T-M11 F40M	0,16	0,18
P3	SCET120612T-M11 F40M	0,15	0,17
P4	SCET120612T-M11 F40M	0,15	0,17
P5	SCET120612T-M11 F40M	0,14	0,17
P6	SCET120612T-M11 F40M	0,14	0,16
P7	SCET120612T-M11 MP2500	0,14	0,16
P8	SCET120612T-M11 MP2500	0,15	0,17
P11	SCET120612T-M11 F40M	0,14	0,16
M1	SCET120612T-M14 F40M	0,20	0,24
M2	SCET120612T-M14 F40M	0,18	0,22
M3	SCET120612T-M14 F40M	0,15	0,17
M4	SCET120612T-M14 F40M	0,13	0,15
M5	SCET120612T-M14 F40M	0,13	0,15
K1	SCET120612T-M11 MK1500	0,16	0,18
K2	SCET120612T-M11 MK1500	0,14	0,17
K3	SCET120612T-M11 MK1500	0,14	0,17
K4	SCET120612T-M11 MK1500	0,14	0,17
K5	SCET120612T-M11 MK1500	0,13	0,15
K6	SCET120612T-M11 MK1500	0,14	0,17
K7	SCET120612T-M11 MK1500	0,13	0,15
N1	SCET120612T-ME10 F40M	0,18	0,22
N2	SCET120612T-ME10 F40M	0,18	0,22
N3	SCET120612T-ME10 F40M	0,18	0,22
N11	SCET120612T-ME10 F40M	0,18	0,22
S1	SCET120612T-M14 F40M	0,13	0,15
S2	SCET120612T-M14 F40M	0,13	0,15
S3	SCET120612T-M14 F40M	0,12	0,14
S11	SCET120612T-ME10 F40M	0,10	0,12
S12	SCET120612T-ME10 F40M	0,10	0,12
S13	SCET120612T-ME10 F40M	0,090	0,11
H5	SCET120612T-MD15 MP1500	0,13	0,15
H8	SCET120612T-MD15 MP1500	0,10	0,12
H11	SCET120612T-MD15 MP1500	0,13	0,15
H12	SCET120612T-MD15 MP1500	0,13	0,15
H21	SCET120612T-MD15 MP1500	0,10	0,12

SMG = Seco material group
f_z = mm/tooth
v_c= m/min
a_r/D_c = %
All cutting data are start values

T-slot SCET12 - Cutting data v_c = (m/min)

	MP1500		MP2500		MP3000		T350M		F40M		MK1500		HX	
SMG	100%	25%	100%	25%	100%	25%	100%	25%	100%	25%	100%	25%	100%	25%
P1	330	445	290	395	265	360	240	330	210	290	—	—	165	220
P2	315	435	280	385	255	350	235	325	205	280	—	—	160	215
P3	275	380	245	335	225	310	205	285	180	250	—	—	140	190
P4	245	335	215	295	200	275	180	250	160	220	—	—	125	170
P5	235	325	210	285	190	260	175	240	155	210	—	—	120	160
P6	265	365	235	320	215	295	200	270	170	235	—	—	135	185
P7	250	345	220	305	205	275	185	255	165	220	—	—	125	175
P8	230	320	205	280	190	260	175	240	150	210	—	—	115	160
P11	245	335	215	295	200	270	180	250	160	215	—	—	120	170
M1	—	—	200	275	190	265	180	250	165	225	—	—	—	—
M2	—	—	170	230	160	220	150	205	140	190	—	—	—	—
M3	—	—	135	185	130	180	125	170	110	155	—	—	—	—
M4	—	—	105	145	100	140	95	130	85	120	—	—	—	—
M5	—	—	90	120	85	115	80	110	75	100	—	—	—	—
K1	250	345	220	305	205	280	185	255	160	225	310	430	150	205
K2	225	310	200	275	180	250	170	230	145	200	280	385	135	180
K3	190	260	170	230	155	210	140	195	125	170	240	325	115	155
K4	180	250	160	220	145	200	135	185	120	160	230	310	110	145
K5	110	150	100	135	90	125	80	115	70	100	140	190	65	90
K6	160	220	140	195	130	175	120	165	105	140	200	275	95	130
K7	140	195	125	170	115	160	105	145	90	125	175	240	85	115
N1	—	—	810	1125	740	1025	—	—	600	820	—	—	540	750
N2	—	—	650	900	600	830	—	—	480	660	—	—	440	600
N3	—	—	435	600	400	550	—	—	320	440	—	—	290	400
N11	—	—	500	680	460	630	—	—	365	500	—	—	335	460
S1	—	—	50	70	47	65	45	60	41	55	—	—	—	—
S2	—	—	41	55	38	50	36	49	33	45	—	—	—	—
S3	—	—	37	50	34	46	32	43	29	39	—	—	—	—
S11	—	—	70	100	65	90	60	85	55	80	—	—	—	—
S12	—	—	41	55	38	55	36	50	33	45	—	—	—	—
S13	—	—	33	45	31	42	29	40	26	36	—	—	—	—
H5	50	70	42	55	40	55	39	55	34	47	—	—	26	37
H8	55	75	45	60	43	60	42	55	37	50	—	—	28	39
H11	65	90	55	75	50	70	50	70	44	60	—	—	34	47
H12	110	145	85	120	80	115	80	110	70	95	—	—	55	75
H21	55	75	45	60	43	60	42	55	37	50	—	—	28	39

Plunge milling cutters

Insert	a_p max	Material suitability								
		P	M	K	N	S	H			
XO06	3.0	■	■	■	■	■	□	■	◪	■
XO10	6.0	■	■	■	■	■	□	■	■	■
XO12	7.0	■	■	■	■	■	□	◪	■	■
SCET	11	■	■	■	■	■	□	-	■	◪
	20									
	30									
	40									

a_p max	Maximum depth of cut possible	1st choice	■	High speed machine with low Power / Torque		Unstable condition suitability	
		Alternative choice	◪				
		Possible choice	□	Strong stable machine with rigid connecion			
		Not recommended	-				

Plunge milling cutters

No. of cutting edges	Application	Cutter diameter available (mm) / number of teeth													See page
		12	16	18	20	25	32	40	50	63	80	100	125	160	
2		2	3												299
		3	4	4											
2					2										302-303
						3	4	5							
2							2	3	4						306-307
						2	3	4		5					
4							2	3	4	5	6	7	8		310-312
												4			
													4		
														4	

x	x indicates effective number of teeth
x	x indicates effective number of teeth

Trouble shooter for unstable fixturing and/or machine

Basic choice

Milling cutters

In milling Seco uses product specific designation systems, there is no ISO system available for cutters. See example below.

Code key for Plunge milling cutter 217.79

217 = With shank
220 = For arbor

Shank type

Cutter diameter

Effective No. of teeth (Z_c)

R 217.79-18 20.0-10 A

Right hand rotation

Cutter system

Insert size

A = With through coolant supply

Dimensions of mounting

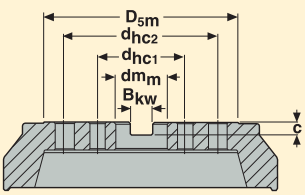

Dimensions in mm						spindle-nose
D_{5m}	dm_m	B_{kw}	c	d_{hc1}	d_{hc2}	
30-35	16	8,4	5,6	–	–	–
42-47	22	10,4	6.3	–	–	–
48-62	27	12,4	7	–	–	–
60-90	32	14,4	8	–	–	–
90-130	40	16,4	9	66,7	–	(8xxx)
130-270	60	25,7	14	101,6	177,8	(8xxx)

For a more exact D_{5m} and dm_m measurement, see each product table.

R217.79-06AN

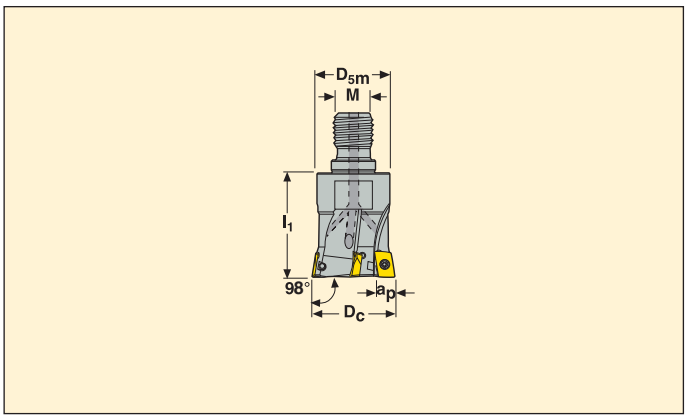

- For insert selection and cutting data recommendations, see page(s) 300-301
- For complete insert programme, see page(s) 639

Part No.	Type of mounting	Dimensions in mm a_p	D_c	D_{5m}	l_1	M		KG		Insert
R217.79 -0612.RE-06.2AN	Combimaster	3,0	12	11	18	M6	2	0,1	32000	XO..06
-0612.RE-06.3AN	Combimaster	3,0	12	11	18	M6	3	0,1	32000	XO..06
R217.79 -0816.RE-06.3AN	Combimaster	3,0	16	13,5	20	M8	3	0,1	28000	XO..06
-0816.RE-06.4AN	Combimaster	3,0	16	13,5	20	M8	4	0,1	28000	XO..06
R217.79 -0818.RE-06.4AN	Combimaster	3,0	18	13,5	20	M8	4	0,1	25000	XO..06

For Combimaster shanks and dimensions, see pages 588-598

Spare Parts

For cutter	Insert screw	Insert key
R217.79-..	C01804-T06P	T06P-3

Please check availability in current price and stock-list
Torque value 0,5 Nm. Torque keys, see page 690

R217.79-06– Insert selection

SMG		f_z	a_{so}			
			100%	70%	50%	30%
P1	XOMX060204R-M05 F40M	0,070	2,0	2,0	2,0	2,5
P2	XOMX060204R-M05 F40M	0,070	2,0	2,0	2,0	2,5
P3	XOMX060204R-M05 F40M	0,070	2,0	2,0	2,0	2,5
P4	XOMX060204R-M05 F40M	0,065	2,0	2,0	2,0	2,5
P5	XOMX060204R-M05 F40M	0,065	2,0	2,0	2,0	2,5
P6	XOMX060204R-M05 F40M	0,065	2,0	2,0	2,0	2,5
P7	XOMX060204R-M05 F40M	0,065	2,0	2,0	2,0	2,5
P8	XOMX060204R-M05 MP3000	0,070	2,0	2,0	2,0	2,5
P11	XOMX060204R-M05 F40M	0,065	2,0	2,0	2,0	2,5
M1	XOMX060204R-M05 F40M	0,070	2,0	2,0	2,0	2,5
M2	XOMX060204R-M05 F40M	0,065	2,0	2,0	2,0	2,5
M3	XOMX060204R-M05 F40M	0,055	1,7	1,7	1,7	1,9
M4	XOMX060204R-M05 F40M	0,048	1,3	1,3	1,3	1,4
M5	XOMX060204R-M05 F40M	0,048	1,3	1,3	1,3	1,4
K1	XOMX060204R-M05 MP3000	0,070	2,0	2,0	2,0	2,5
K2	XOMX060204R-M05 MP3000	0,065	2,0	2,0	2,0	2,5
K3	XOMX060204R-M05 MP3000	0,065	2,0	2,0	2,0	2,5
K4	XOMX060204R-M05 MP3000	0,065	2,0	2,0	2,0	2,5
K5	XOMX060204R-M05 MP3000	0,060	2,0	2,0	2,0	2,5
K6	XOMX060204R-M05 MP3000	0,065	2,0	2,0	2,0	2,5
K7	XOMX060204R-M05 MP3000	0,060	2,0	2,0	2,0	2,5
N1	XOEX060204FR-E03 H15	0,075	2,0	2,0	2,0	2,5
N2	XOEX060204FR-E03 F40M	0,075	2,0	2,0	2,0	2,5
N3	XOEX060204FR-E03 F40M	0,075	2,0	2,0	2,0	2,5
N11	XOEX060204FR-E03 H15	0,075	2,0	2,0	2,0	2,5
S1	XOMX060204R-M05 F40M	0,048	1,3	1,3	1,3	1,4
S2	XOMX060204R-M05 F40M	0,048	1,3	1,3	1,3	1,4
S3	XOMX060204R-M05 F40M	0,044	1,3	1,3	1,3	1,4
S11	XOMX060204R-M05 F40M	0,055	1,5	1,5	1,5	1,7
S12	XOMX060204R-M05 F40M	0,055	1,5	1,5	1,5	1,7
S13	XOMX060204R-M05 F40M	0,048	1,3	1,3	1,3	1,4
H5	XOMX060204R-M05 MP3000	0,044	1,7	1,7	1,7	1,9
H8	XOMX060204R-M05 MP3000	0,034	1,5	1,5	1,5	1,7
H11	XOMX060204R-M05 MP3000	0,044	1,7	1,7	1,7	1,9
H12	XOMX060204R-M05 MP3000	0,044	1,7	1,7	1,7	1,9
H21	XOMX060204R-M05 MP3000	0,034	1,5	1,5	1,5	1,7

SMG = Seco material group
f_z = mm/tooth
v_c= m/min
a_e/D_c = %
All cutting data are start values

R217.79-06 – Cutting data v_c = (m/min)

	MP3000				F15M				F40M				MM4500				H15			
SMG	100%	70%	50%	30%	100%	70%	50%	30%	100%	70%	50%	30%	100%	70%	50%	30%	100%	70%	50%	30%
P1	305	340	360	390	290	325	345	375	245	270	290	315	195	220	235	255	—	—	—	—
P2	295	330	350	380	285	320	340	365	235	265	280	305	190	215	230	245	—	—	—	—
P3	255	285	305	330	245	275	290	315	205	230	240	260	165	185	195	215	—	—	—	—
P4	230	255	270	295	220	245	260	280	185	205	220	235	150	165	175	190	—	—	—	—
P5	220	245	260	280	210	235	250	270	175	195	210	225	140	160	170	180	—	—	—	—
P6	245	275	290	315	235	265	280	305	195	220	235	250	160	180	190	205	—	—	—	—
P7	230	260	275	300	220	250	265	285	185	205	220	240	150	170	180	195	—	—	—	—
P8	215	240	255	275	205	230	245	265	170	190	205	220	140	155	165	180	—	—	—	—
P11	225	250	265	290	215	240	255	280	180	200	215	230	145	165	175	185	—	—	—	—
M1	220	250	265	285	230	255	275	295	190	215	225	245	165	185	195	210	—	—	—	—
M2	180	205	215	235	190	210	225	245	155	175	185	200	135	150	160	175	—	—	—	—
M3	145	165	175	190	150	170	180	195	125	140	150	160	110	120	130	140	—	—	—	—
M4	115	130	135	150	120	135	140	155	100	110	120	130	85	95	100	110	—	—	—	—
M5	95	105	115	125	100	110	120	130	85	90	100	105	70	80	85	90	—	—	—	—
K1	235	260	280	300	225	250	270	290	190	210	225	240	—	—	—	—	—	—	—	—
K2	205	230	245	265	200	220	235	255	165	185	195	215	—	—	—	—	—	—	—	—
K3	175	195	210	225	170	190	200	215	140	155	165	180	—	—	—	—	—	—	—	—
K4	165	185	200	215	160	180	190	205	135	150	160	170	—	—	—	—	—	—	—	—
K5	100	115	120	130	100	110	115	125	80	90	95	105	—	—	—	—	—	—	—	—
K6	145	165	175	190	140	160	170	180	120	130	140	150	—	—	—	—	—	—	—	—
K7	130	145	155	165	125	140	150	160	105	115	125	135	—	—	—	—	—	—	—	—
N1	870	970	1025	1125	830	930	990	1075	690	780	830	890	—	—	—	—	730	820	870	940
N2	700	780	830	900	670	750	800	870	560	630	670	720	—	—	—	—	590	660	700	760
N3	470	520	560	600	450	500	530	580	375	420	445	480	—	—	—	—	395	440	470	510
N11	530	600	640	690	510	570	610	660	430	475	510	550	—	—	—	—	450	500	540	580
S1	55	60	65	70	55	60	65	70	46	50	55	60	26	29	31	34	—	—	—	—
S2	43	48	50	55	45	50	55	60	37	42	44	48	21	24	25	27	—	—	—	—
S3	38	42	45	49	39	44	47	50	33	37	39	42	19	21	22	24	—	—	—	—
S11	75	85	90	95	75	85	90	100	65	70	75	85	36	41	43	47	—	—	—	—
S12	43	48	50	55	44	50	55	55	37	41	44	48	28	31	33	36	—	—	—	—
S13	35	39	41	45	36	40	43	46	30	33	36	39	23	25	27	29	—	—	—	—
H5	45	50	55	60	46	50	55	60	39	43	46	50	—	—	—	—	—	—	—	—
H8	48	55	55	60	49	55	60	65	41	46	49	55	—	—	—	—	—	—	—	—
H11	60	65	70	75	60	65	70	75	50	55	60	65	—	—	—	—	—	—	—	—
H12	95	105	110	120	95	105	115	125	80	90	95	105	—	—	—	—	—	—	—	—
H21	48	55	55	60	49	55	60	65	41	46	49	55	—	—	—	—	—	—	—	—

R217.79-10

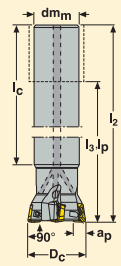

- For insert selection and cutting data recommendations, see page(s) 304-305
- For complete insert programme, see page(s) 640

Part No.	Type of mounting	Dimensions in mm							KG		Insert
		a_p	D_c	dm_m	l_2	l_p	l_c				
R217.79 -1820.0-10-2A	Cylindrical	6,0	20,0	18,0	160,0	112,0	130,0	2	0,3	29000	XO.X10T3
R217.79 -2025.0-10-3A	Cylindrical	6,0	25,0	20,0	200,0	150,0	170,0	3	0,6	26000	XO.X10T3
R217.79 -2532.0-10-4A	Cylindrical	6,0	32,0	25,0	250,0	190,0	218,0	4	1,3	22900	XO.X10T3

Spare Parts

For cutter	Insert screw	Insert key
		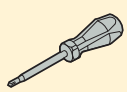
R217.79-..	C02506-T07P	T07P-3

Please check availability in current price and stock-list
Torque value 1,0 Nm. Torque keys, see page 690

R217.79-10

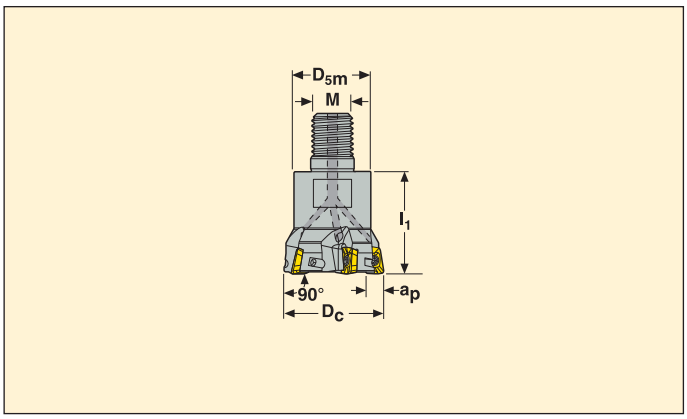

- For insert selection and cutting data recommendations, see page(s) 304-305
- For complete insert programme, see page(s) 640

Part No.	Type of mounting	Dimensions in mm						KG		Insert
		a_p	D_c	D_{5m}	l_1	M				
R217.79 -1020.RE-10-2A	Combimaster	6,0	20,0	18,0	28,0	M10	2	0,1	29000	XO.X10T3
R217.79 -1225.RE-10-3A	Combimaster	6,0	25,0	22,5	30,0	M12	3	0,1	26000	XO.X10T3
R217.79 -1632.RE-10-4A	Combimaster	6,0	32,0	29,0	40,0	M16	4	0,2	22900	XO.X10T3
R217.79 -1640.RE-10-5A	Combimaster	6,0	40,0	30,0	40,0	M16	5	0,3	150000	XO.X10T3
R217.79 -2040.RE-10-5A	Combimaster	6,0	40,0	36,5	40,0	M20	5	0,4	150000	XO.X10T3

For Combimaster shanks and dimensions, see pages 588-598

Spare Parts

For cutter	Insert screw	Insert key
		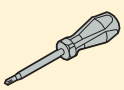
R217.79-..	C02506-T07P	T07P-3
R217.79-10	C02506-T07P	T07P-3

Please check availability in current price and stock-list
Torque value 1,0 Nm. Torque keys, see page 690

R217.79-10– Insert selection

SMG		f_z	a_{so}			
			100%	70%	50%	30%
P1	XOMX10T308TR-ME07 F40M	0,11	4,0	4,0	4,0	5,0
P2	XOMX10T308TR-ME07 F40M	0,12	4,0	4,0	4,0	5,0
P3	XOMX10T308TR-ME07 MP2500	0,11	4,0	4,0	4,0	5,0
P4	XOMX10T308TR-ME07 MP2500	0,11	4,0	4,0	4,0	5,0
P5	XOMX10T308TR-ME07 MP2500	0,11	4,0	4,0	4,0	5,0
P6	XOMX10T308TR-ME07 MP2500	0,10	4,0	4,0	4,0	5,0
P7	XOMX10T308TR-M09 MP2500	0,12	4,0	4,0	4,0	5,0
P8	XOMX10T308TR-M09 MP2500	0,12	4,0	4,0	4,0	5,0
P11	XOMX10T308TR-M09 MP2500	0,12	4,0	4,0	4,0	5,0
M1	XOMX10T308TR-ME07 MP2500	0,12	4,0	4,0	4,0	5,0
M2	XOMX10T308TR-ME07 MP2500	0,11	4,0	4,0	4,0	5,0
M3	XOMX10T308TR-ME07 MP2500	0,085	3,5	3,5	3,5	4,0
M4	XOMX10T308TR-M09 T350M	0,085	2,5	2,5	2,5	3,0
M5	XOMX10T308TR-M09 F40M	0,085	2,5	2,5	2,5	3,0
K1	XOMX10T308TR-M09 MK1500	0,13	4,0	4,0	4,0	5,0
K2	XOMX10T308TR-M09 MK1500	0,12	4,0	4,0	4,0	5,0
K3	XOMX10T308TR-M09 MK1500	0,12	4,0	4,0	4,0	5,0
K4	XOMX10T308TR-M09 MK1500	0,12	4,0	4,0	4,0	5,0
K5	XOMX10T308TR-M09 MK1500	0,11	4,0	4,0	4,0	5,0
K6	XOMX10T308TR-M09 MK1500	0,12	4,0	4,0	4,0	5,0
K7	XOMX10T308TR-M09 MP1500	0,11	4,0	4,0	4,0	5,0
N1	XOEX10T308FR-E05 H15	0,11	4,0	4,0	4,0	5,0
N2	XOEX10T308FR-E05 F40M	0,11	4,0	4,0	4,0	5,0
N3	XOEX10T308FR-E05 F40M	0,11	4,0	4,0	4,0	5,0
N11	XOEX10T308FR-E05 F40M	0,11	4,0	4,0	4,0	5,0
S1	XOMX10T308TR-ME07 T350M	0,075	2,5	2,5	2,5	3,0
S2	XOMX10T308TR-ME07 T350M	0,075	2,5	2,5	2,5	3,0
S3	XOMX10T308TR-M09 F40M	0,080	2,5	2,5	2,5	3,0
S11	XOMX10T308TR-ME07 F40M	0,085	3,0	3,0	3,0	3,5
S12	XOMX10T308TR-ME07 F40M	0,085	3,0	3,0	3,0	3,5
S13	XOMX10T308TR-ME07 F40M	0,075	2,5	2,5	2,5	3,0
H5	XOMX10T308TR-M09 MP1500	0,080	3,5	3,5	3,5	4,0
H8	XOMX10T308TR-M09 MP1500	0,065	3,0	3,0	3,0	3,5
H11	XOMX10T308TR-M09 MP1500	0,080	3,5	3,5	3,5	4,0
H12	XOMX10T308TR-M09 MP1500	0,080	3,5	3,5	3,5	4,0
H21	XOMX10T308TR-M09 MP1500	0,065	3,0	3,0	3,0	3,5

SMG = Seco material group
f_z = mm/tooth
v_c= m/min
a_e/D_c = %
All cutting data are start values

R217.79-10 – Cutting data v_c = (m/min)

	MP1500				MP2500				MP3000				T350M				F40M			
SMG	100%	70%	50%	30%	100%	70%	50%	30%	100%	70%	50%	30%	100%	70%	50%	30%	100%	70%	50%	30%
P1	300	335	360	390	265	300	320	345	255	285	300	325	255	285	305	330	200	225	240	260
P2	295	330	350	380	260	290	310	335	245	275	295	320	245	275	290	315	195	220	235	255
P3	260	290	310	335	230	255	275	295	215	245	260	280	215	240	255	280	175	195	205	225
P4	230	255	270	295	200	225	240	260	190	215	230	245	190	210	225	245	155	170	180	195
P5	220	245	260	280	195	215	230	250	185	205	215	235	180	200	215	235	145	165	175	190
P6	245	275	290	315	215	240	260	280	205	230	245	265	210	235	250	270	165	185	195	210
P7	230	260	275	295	205	230	245	265	195	215	230	250	200	220	235	255	155	175	185	200
P8	220	245	260	280	195	215	230	250	185	205	215	235	180	200	215	235	145	165	175	190
P11	225	250	265	290	200	220	235	255	190	210	225	240	190	215	230	245	150	170	180	195
M1	—	—	—	—	190	210	225	240	185	205	220	240	190	210	225	240	160	180	190	205
M2	—	—	—	—	155	175	185	200	155	170	180	195	155	175	185	200	130	145	155	170
M3	—	—	—	—	130	145	155	165	125	140	150	165	130	145	155	165	110	120	130	140
M4	—	—	—	—	100	115	120	130	100	110	120	130	105	115	120	130	85	95	100	110
M5	—	—	—	—	85	95	100	110	85	95	100	105	85	95	100	110	70	80	85	90
K1	235	260	275	300	205	230	245	265	195	220	230	250	195	215	230	250	155	175	185	200
K2	205	230	245	265	185	205	220	235	175	195	205	225	170	190	205	220	140	155	165	180
K3	175	195	210	225	155	175	185	200	145	165	175	190	145	165	175	185	115	130	140	150
K4	165	185	200	215	150	165	175	190	140	155	165	180	140	155	165	180	110	125	135	145
K5	100	115	120	130	90	100	110	115	85	95	100	110	85	95	105	110	70	75	80	90
K6	145	165	175	190	130	145	155	170	125	140	145	160	120	135	145	160	100	110	115	125
K7	130	145	155	170	115	130	140	150	110	120	130	140	110	125	130	140	90	100	105	115
N1	—	—	—	—	750	840	890	970	710	790	840	910	—	—	—	—	570	630	670	730
N2	—	—	—	—	610	680	720	780	570	640	680	740	—	—	—	—	460	510	550	590
N3	—	—	—	—	405	450	480	520	380	425	455	490	—	—	—	—	305	340	365	395
N11	—	—	—	—	460	510	550	590	435	485	520	560	—	—	—	—	350	390	415	450
S1	—	—	—	—	49	55	60	65	47	50	55	60	48	55	55	60	40	45	48	50
S2	—	—	—	—	40	44	47	50	37	42	45	48	39	43	46	50	32	36	38	42
S3	—	—	—	—	35	39	41	45	33	37	39	42	34	38	40	44	28	32	34	37
S11	—	—	—	—	70	75	80	90	65	70	75	85	65	75	80	85	55	60	65	70
S12	—	—	—	—	39	44	47	50	37	41	44	48	38	43	45	49	32	36	38	41
S13	—	—	—	—	32	36	38	41	30	33	36	39	31	34	37	40	26	29	31	33
H5	50	55	60	65	40	45	48	50	39	43	46	50	41	46	49	55	33	37	40	43
H8	55	60	65	70	43	47	50	55	41	46	49	55	45	50	55	55	35	40	42	46
H11	65	70	75	80	50	55	60	65	50	55	60	65	50	60	60	70	43	48	50	55
H12	105	115	120	130	85	90	100	105	80	90	95	105	85	95	100	110	70	75	80	90
H21	55	60	65	70	43	47	50	55	41	46	49	55	45	50	55	55	35	40	42	46

R217.79-10 – Cutting data v_c = (m/min)

	MK1500				MK2050				MS2050				MS2500				H15			
SMG	100%	70%	50%	30%	100%	70%	50%	30%	100%	70%	50%	30%	100%	70%	50%	30%	100%	70%	50%	30%
P1	—	—	—	—	265	295	315	340	265	290	300	320	290	325	345	375	—	—	—	—
P2	—	—	—	—	255	285	305	330	260	280	295	310	285	315	340	365	—	—	—	—
P3	—	—	—	—	225	255	270	290	225	240	255	270	250	280	300	325	—	—	—	—
P4	—	—	—	—	200	220	235	255	195	215	220	235	220	245	260	285	—	—	—	—
P5	—	—	—	—	190	210	225	245	185	205	210	225	210	235	250	270	—	—	—	—
P6	—	—	—	—	215	240	255	275	210	230	240	250	235	265	280	305	—	—	—	—
P7	—	—	—	—	200	225	240	260	200	215	225	240	225	250	265	285	—	—	—	—
P8	—	—	—	—	190	210	225	245	185	205	215	225	210	235	250	270	—	—	—	—
P11	—	—	—	—	195	220	235	250	195	210	220	230	215	240	260	280	—	—	—	—
M1	—	—	—	—	—	—	—	—	225	245	255	270	205	225	240	260	—	—	—	—
M2	—	—	—	—	—	—	—	—	185	200	205	220	170	190	200	215	—	—	—	—
M3	—	—	—	—	—	—	—	—	135	145	150	160	140	155	165	180	—	—	—	—
M4	—	—	—	—	—	—	—	—	90	100	105	110	110	125	130	140	—	—	—	—
M5	—	—	—	—	—	—	—	—	75	85	85	90	90	100	110	120	—	—	—	—
K1	290	325	350	375	275	310	330	355	260	285	295	315	225	250	270	290	—	—	—	—
K2	260	290	310	335	245	275	290	315	225	245	255	270	200	225	240	255	—	—	—	—
K3	220	245	260	285	210	230	245	270	190	210	215	230	170	190	200	220	—	—	—	—
K4	210	235	250	270	200	220	235	255	185	200	205	220	160	180	190	210	—	—	—	—
K5	130	145	150	165	120	135	145	155	105	115	120	130	100	110	115	125	—	—	—	—
K6	185	205	220	240	175	195	210	225	160	175	185	195	140	160	170	185	—	—	—	—
K7	165	185	195	210	155	175	185	200	135	150	155	165	125	140	150	165	—	—	—	—
N1	—	—	—	—	—	—	—	—	—	—	—	—	—	—	—	—	640	720	770	830
N2	—	—	—	—	—	—	—	—	—	—	—	—	—	—	—	—	520	580	620	670
N3	—	—	—	—	—	—	—	—	—	—	—	—	—	—	—	—	345	390	415	445
N11	—	—	—	—	—	—	—	—	—	—	—	—	—	—	—	—	395	445	470	510
S1	—	—	—	—	—	—	—	—	50	55	55	60	55	60	65	70	—	—	—	—
S2	—	—	—	—	—	—	—	—	40	43	46	49	43	48	50	55	—	—	—	—
S3	—	—	—	—	—	—	—	—	35	37	39	42	38	42	45	49	—	—	—	—
S11	—	—	—	—	—	—	—	—	65	70	75	80	75	85	90	95	—	—	—	—
S12	—	—	—	—	—	—	—	—	50	55	55	60	43	48	50	55	—	—	—	—
S13	—	—	—	—	—	—	—	—	43	46	49	50	35	39	41	45	—	—	—	—
H5	—	—	—	—	—	—	—	—	—	—	—	—	43	48	50	55	—	—	—	—
H8	—	—	—	—	—	—	—	—	—	—	—	—	46	50	55	60	—	—	—	—
H11	—	—	—	—	—	—	—	—	—	—	—	—	55	60	65	70	—	—	—	—
H12	—	—	—	—	—	—	—	—	—	—	—	—	90	100	105	115	—	—	—	—
H21	—	—	—	—	—	—	—	—	—	—	—	—	46	50	55	60	—	—	—	—

R217.79-XO12

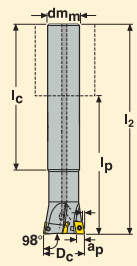

- For insert selection and cutting data recommendations, see page(s) 308-309
- For complete insert programme, see page(s) 641

Part No.	Type of mounting	Dimensions in mm							KG		Insert
		a_p	D_c	dm_m	l_2	l_p	l_c				
R217.79 -2025.0-XO12-2AN	Cylindrical	7	25	20	200	150	170	2	0,5	20800	XO..1204
R217.79 -2532.0-XO12-3AN	Cylindrical	7	32	25	250	194	215	3	0,9	18400	XO..1204

Spare Parts

For cutter	Insert screw	Insert key
R217.79-..	C03507-T10P	T10P-3

Please check availability in current price and stock-list
Torque value 2,0 Nm, Torque keys, see page 690

R217.79-XO12

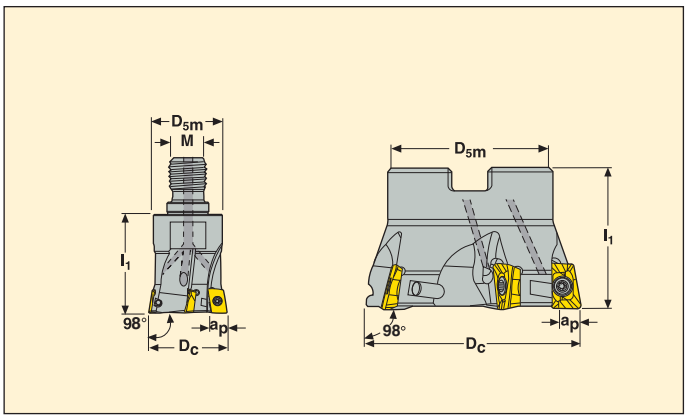

- For insert selection and cutting data recommendations, see page(s) 308-309
- For complete insert programme, see page(s) 641

Part No.	Type of mounting	Dimensions in mm							KG		Insert
		a_p	D_c	D_{5m}	dm_m	l_1	M				
R217.79 -1025.RE-XO12-2AN	Combimaster	7	25	18,5	–	28	M10	2	0,6	20800	XO..1204
-1225.RE-XO12-2AN	Combimaster	7	25	23	–	30	M12	2	0,1	20800	XO..1204
R217.79 -1232.RE-XO12-3AN	Combimaster	7	32	23	–	30	M12	3	0,2	18400	XO..1204
-1632.RE-XO12-2AN	Combimaster	7	32	30	–	40	M16	2	0,2	18400	XO..1204
-1632.RE-XO12-3AN	Combimaster	7	32	30	–	40	M16	3	0,2	18400	XO..1204
R217.79 -1640.RE-XO12-3AN	Combimaster	7	40	30	–	40	M16	3	0,3	16400	XO..1204
R217.79 -2040.RE-XO12.3A	Combimaster	7,0	40,0	36,5	–	40,0	M20	3	0,4	16400	XO.X12
-2040.RE-XO12.4A	Combimaster	7,0	40,0	36,5	–	40,0	M20	4	0,4	16400	XO.X12
R220.79 -0040-XO12-3AN	Arbor	7	40	35	16	40	–	3	0,2	16400	XO..1204
-0040-XO12-4AN	Arbor	7	40	35	16	40	–	4	0,2	16400	XO..1204
R220.79 -0050-XO12-4AN	Arbor	7	50	42	22	40	–	4	0,3	14800	XO..1204
-0063-XO12-5AN	Arbor	7	63	47	22	40	–	5	0,5	13200	XO..1204

For Combimaster shanks and dimensions, see pages 588-598

Spare Parts

For cutter	Insert screw	Insert key	Arbor screw
R217.79-..	C03507-T10P	T10P-3	–
R217.79-XO12	C03507-T10P	T10P-3	–
R220.79-0040-3AN	C03509-T10P	T10P-3	MC6S8X30
R220.79-0040-4AN	C03509-T10P	T10P-2D	MC6S8X30
R220.79-0050-0063	C03509-T10P	T10P-2D	220.17-692

Please check availability in current price and stock-list
Torque value 2,0 Nm, Torque keys, see page 690

R217.79-XO12– Insert selection

SMG		f_z	a_{so}			
			100%	70%	50%	30%
P1	XOMX120408TR-ME08 F40M	0,14	5,0	5,0	5,0	6,0
P2	XOMX120408TR-ME08 F40M	0,14	5,0	5,0	5,0	6,0
P3	XOMX120408TR-ME08 MP2500	0,14	5,0	5,0	5,0	6,0
P4	XOMX120408TR-ME08 MP2500	0,13	5,0	5,0	5,0	6,0
P5	XOMX120408TR-ME08 MP2500	0,13	5,0	5,0	5,0	6,0
P6	XOMX120408TR-ME08 MP2500	0,13	5,0	5,0	5,0	6,0
P7	XOMX120408TR-M12 MP2500	0,15	5,0	5,0	5,0	6,0
P8	XOMX120408TR-M12 MP2500	0,16	5,0	5,0	5,0	6,0
P11	XOMX120408TR-M12 MP2500	0,15	5,0	5,0	5,0	6,0
M1	XOMX120408TR-ME08 MP2500	0,14	5,0	5,0	5,0	6,0
M2	XOMX120408TR-ME08 MP2500	0,13	5,0	5,0	5,0	6,0
M3	XOMX120408TR-ME08 MP2500	0,10	4,0	4,0	4,0	4,5
M4	XOEX120408R-M07 T350M	0,075	3,0	3,0	3,0	3,5
M5	XOEX120408R-M07 T350M	0,075	3,0	3,0	3,0	3,5
K1	XOMX120408TR-M12 MK1500	0,17	5,0	5,0	5,0	6,0
K2	XOMX120408TR-M12 MK1500	0,16	5,0	5,0	5,0	6,0
K3	XOMX120408TR-M12 MK1500	0,16	5,0	5,0	5,0	6,0
K4	XOMX120408TR-M12 MK1500	0,16	5,0	5,0	5,0	6,0
K5	XOMX120408TR-M12 MK1500	0,14	5,0	5,0	5,0	6,0
K6	XOMX120408TR-M12 MK1500	0,16	5,0	5,0	5,0	6,0
K7	XOMX120408TR-M12 MP1500	0,14	5,0	5,0	5,0	6,0
N1	XOEX120408FR-E06 F15M	0,13	5,0	5,0	5,0	6,0
N2	XOEX120408FR-E06 F40M	0,13	5,0	5,0	5,0	6,0
N3	XOEX120408FR-E06 F40M	0,13	5,0	5,0	5,0	6,0
N11	XOEX120408FR-E06 F40M	0,13	5,0	5,0	5,0	6,0
S1	XOEX120408R-M07 T350M	0,075	3,0	3,0	3,0	3,5
S2	XOEX120408R-M07 T350M	0,075	3,0	3,0	3,0	3,5
S3	XOEX120408R-M07 F40M	0,070	3,0	3,0	3,0	3,5
S11	XOEX120408R-M07 MS2050	0,085	3,5	3,5	3,5	4,0
S12	XOEX120408R-M07 MS2050	0,085	3,5	3,5	3,5	4,0
S13	XOEX120408R-M07 MS2050	0,075	3,0	3,0	3,0	3,5
H5	XOMX120408TR-D14 MP1500	0,12	4,0	4,0	4,0	4,5
H8	XOMX120408TR-D14 MP1500	0,095	3,5	3,5	3,5	4,0
H11	XOMX120408TR-D14 MP1500	0,12	4,0	4,0	4,0	4,5
H12	XOMX120408TR-D14 MP1500	0,12	4,0	4,0	4,0	4,5
H21	XOMX120408TR-D14 MP1500	0,095	3,5	3,5	3,5	4,0

SMG = Seco material group
f_z = mm/tooth
v_c= m/min
a_e/D_c = %
All cutting data are start values

R217.79-XO12 – Cutting data v_c = (m/min)

	MP1500				MP2500				MP3000				T350M				F40M			
SMG	100%	70%	50%	30%	100%	70%	50%	30%	100%	70%	50%	30%	100%	70%	50%	30%	100%	70%	50%	30%
P1	260	290	310	335	230	260	275	300	220	245	260	280	250	280	295	320	215	240	255	275
P2	255	285	305	330	225	250	270	290	215	240	255	275	240	270	290	310	210	235	250	270
P3	225	250	265	290	200	220	235	255	185	210	225	240	210	235	250	270	180	200	215	230
P4	195	220	235	255	175	195	205	225	165	185	195	215	185	205	220	235	160	180	190	210
P5	190	210	225	240	165	185	200	215	160	175	185	205	180	200	215	230	155	175	185	200
P6	215	240	255	275	190	215	225	245	180	200	215	235	200	225	240	260	175	195	205	225
P7	205	225	240	260	180	200	215	230	170	190	205	220	190	215	225	245	165	185	195	210
P8	190	210	225	240	165	185	200	215	160	175	185	205	175	195	210	225	150	170	180	195
P11	195	220	235	255	175	195	210	225	165	185	195	215	185	205	220	240	160	180	190	205
M1	—	—	—	—	160	180	195	210	160	180	190	205	185	210	220	240	170	190	200	215
M2	—	—	—	—	135	150	160	175	130	145	155	170	155	175	185	200	140	155	165	180
M3	—	—	—	—	110	125	130	140	110	120	130	140	125	140	150	160	115	130	135	150
M4	—	—	—	—	90	100	105	115	85	95	105	115	100	110	115	125	85	95	100	105
M5	—	—	—	—	75	85	90	95	75	80	85	95	80	90	100	105	70	80	80	90
K1	200	225	240	260	180	200	210	230	170	190	200	220	190	215	230	245	165	185	195	210
K2	180	200	210	230	160	175	190	205	150	165	180	195	170	190	205	220	145	165	175	190
K3	150	170	180	195	135	150	160	170	125	140	150	165	145	160	170	185	125	140	145	160
K4	145	160	170	185	130	140	150	165	120	135	145	155	140	155	165	180	120	130	140	150
K5	90	100	105	115	80	90	95	100	75	85	90	95	85	95	100	105	70	80	85	95
K6	125	140	150	165	110	125	135	145	105	120	125	135	120	135	145	155	105	115	125	135
K7	115	130	135	150	100	115	120	130	95	105	115	125	105	120	125	140	90	105	110	120
N1	—	—	—	—	650	720	770	830	610	680	730	790	—	—	—	—	600	670	710	770
N2	—	—	—	—	520	580	620	670	495	550	590	640	—	—	—	—	485	540	580	620
N3	—	—	—	—	350	390	415	450	330	370	390	425	—	—	—	—	325	360	385	415
N11	—	—	—	—	400	445	475	510	375	420	450	485	—	—	—	—	370	415	440	475
S1	—	—	—	—	43	48	50	55	41	45	48	55	46	50	55	60	39	43	46	50
S2	—	—	—	—	35	39	41	45	33	37	39	42	37	41	44	48	31	35	37	40
S3	—	—	—	—	31	34	37	40	29	32	35	38	33	36	39	42	27	31	33	35
S11	—	—	—	—	60	65	70	75	55	60	65	70	65	70	75	80	60	65	70	75
S12	—	—	—	—	34	38	40	44	32	36	38	41	37	41	44	47	34	38	40	44
S13	—	—	—	—	28	31	33	36	26	29	31	34	30	33	35	38	25	28	30	32
H5	43	48	50	55	34	38	41	44	34	37	40	43	40	45	48	50	35	39	41	45
H8	47	55	55	60	38	42	45	49	37	41	44	48	43	48	50	55	37	42	44	48
H11	55	60	65	70	44	49	55	55	43	48	50	55	50	60	60	65	45	50	55	55
H12	90	100	105	115	70	80	85	90	70	80	85	90	85	95	100	105	70	80	85	90
H21	47	55	55	60	38	42	45	49	37	41	44	48	43	48	50	55	37	42	44	48

R217.79-XO12 – Cutting data v_c = (m/min)

	MK1500				MK2050				MS2050				MS2500				H15			
SMG	100%	70%	50%	30%	100%	70%	50%	30%	100%	70%	50%	30%	100%	70%	50%	30%	100%	70%	50%	30%
P1	—	—	—	—	230	255	270	295	260	285	295	315	310	350	370	400	—	—	—	—
P2	—	—	—	—	220	250	265	285	255	275	290	310	305	340	360	390	—	—	—	—
P3	—	—	—	—	195	220	230	250	220	235	250	265	260	290	310	335	—	—	—	—
P4	—	—	—	—	170	190	205	220	190	210	220	235	230	255	275	295	—	—	—	—
P5	—	—	—	—	165	185	195	210	190	205	215	225	225	250	270	290	—	—	—	—
P6	—	—	—	—	190	210	225	240	210	230	240	255	255	285	300	325	—	—	—	—
P7	—	—	—	—	175	200	210	230	200	215	225	240	240	265	285	310	—	—	—	—
P8	—	—	—	—	165	185	195	210	185	200	210	225	220	245	260	285	—	—	—	—
P11	—	—	—	—	170	190	205	220	195	210	220	235	230	260	275	300	—	—	—	—
M1	—	—	—	—	—	—	—	—	220	240	255	270	215	245	260	280	—	—	—	—
M2	—	—	—	—	—	—	—	—	185	200	210	220	180	200	215	230	—	—	—	—
M3	—	—	—	—	—	—	—	—	140	155	160	170	145	165	175	190	—	—	—	—
M4	—	—	—	—	—	—	—	—	105	115	120	125	115	130	135	150	—	—	—	—
M5	—	—	—	—	—	—	—	—	90	95	100	105	95	105	115	125	—	—	—	—
K1	255	280	300	325	240	265	285	310	255	280	290	310	240	270	285	310	—	—	—	—
K2	225	250	265	290	210	235	250	275	225	245	260	275	215	240	255	275	—	—	—	—
K3	190	210	225	245	180	200	215	230	190	210	220	230	180	205	215	235	—	—	—	—
K4	180	200	215	235	170	190	205	220	185	200	210	220	175	195	205	225	—	—	—	—
K5	110	125	135	145	105	120	125	135	110	120	125	135	105	115	125	135	—	—	—	—
K6	160	180	190	205	150	170	180	195	160	175	185	195	150	170	180	195	—	—	—	—
K7	145	160	170	185	135	150	160	175	140	155	160	170	135	150	160	170	—	—	—	—
N1	—	—	—	—	—	—	—	—	—	—	—	—	—	—	—	—	620	700	740	800
N2	—	—	—	—	—	—	—	—	—	—	—	—	—	—	—	—	500	560	600	650
N3	—	—	—	—	—	—	—	—	—	—	—	—	—	—	—	—	335	375	400	435
N11	—	—	—	—	—	—	—	—	—	—	—	—	—	—	—	—	385	430	455	495
S1	—	—	—	—	—	—	—	—	42	45	48	50	55	65	65	70	—	—	—	—
S2	—	—	—	—	—	—	—	—	34	36	39	42	45	50	55	60	—	—	—	—
S3	—	—	—	—	—	—	—	—	30	33	35	37	40	44	47	50	—	—	—	—
S11	—	—	—	—	—	—	—	—	55	60	60	65	80	85	90	100	—	—	—	—
S12	—	—	—	—	—	—	—	—	42	45	48	50	45	50	55	60	—	—	—	—
S13	—	—	—	—	—	—	—	—	36	39	41	44	36	40	43	47	—	—	—	—
H5	—	—	—	—	—	—	—	—	—	—	—	—	45	50	55	60	—	—	—	—
H8	—	—	—	—	—	—	—	—	—	—	—	—	49	55	60	65	—	—	—	—
H11	—	—	—	—	—	—	—	—	—	—	—	—	60	65	70	75	—	—	—	—
H12	—	—	—	—	—	—	—	—	—	—	—	—	95	105	110	120	—	—	—	—
H21	—	—	—	—	—	—	—	—	—	—	—	—	49	55	60	65	—	—	—	—

R217.79-12

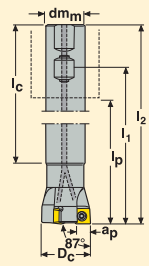

- For insert selection and cutting data recommendations, see page(s) 313-314
- For complete insert programme, see page(s) 617

Part No.	Type of mounting	Dimensions in mm								KG		Insert
		a_p	D_c	dm_m	l_1	l_2	l_p	l_c				
R217.79 -2532.3-12A	Cyl.-Weldon	11	32	25	168	200	144	150	2	0,7	12100	SC..1206
R217.79 -3240.3-12A	Cyl.-Weldon	11	40	32	164	200	140	150	3	1,1	10800	SC..1206

Spare Parts

For cutter	Insert screw	Insert key
		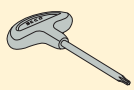
R217.79-..	C45011-T20P	T20P-4

Please check availability in current price and stock-list
Torque value 3,5 Nm. Torque keys, see page 690

R220.79-12

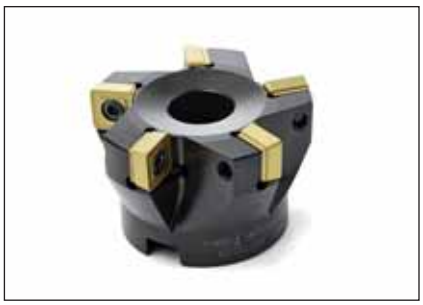

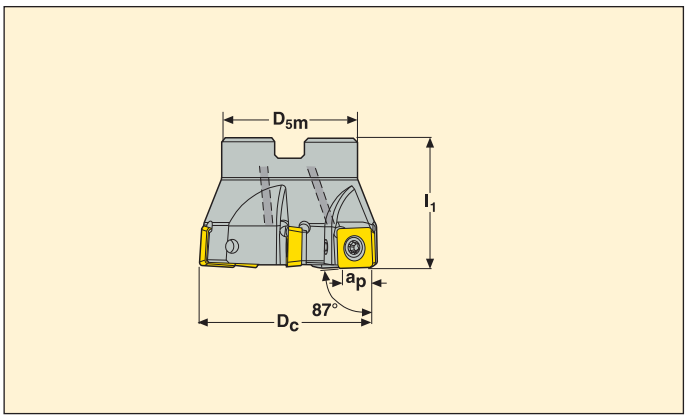

- For insert selection and cutting data recommendations, see page(s) 313-314
- For complete insert programme, see page(s) 617

Part No.	Type of mounting	Dimensions in mm						KG		Insert
		a_p	D_c	D_{5m}	dm_m	l_1				
R220.79 -0050-12A	Arbor	11	50	42	22	40	4	0,3	9700	SC..1206
R220.79 -0063-12A	Arbor	11	63	47	22	40	5	0,5	8600	SC..1206
R220.79 -0080-12A	Arbor	11	80	62	27	50	6	1,0	7600	SC..1206
R220.79 -0100-12A	Arbor	11	100	77	32	50	7	1,6	7000	SC..1206
R220.79 -0125-12	Arbor	11	125	90	40	63	8	2,9	6300	SC..1206

Spare Parts

For cutter	Insert screw	Insert key	Arbor screw
		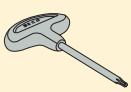	
R220.79-0050-0063	C45011-T20P	T20P-4	220.17-692
R220.79-0080-0100	C45011-T20P	T20P-4	–

Please check availability in current price and stock-list
Torque value 3,5 Nm. Torque keys, see page 690

R220.79-12

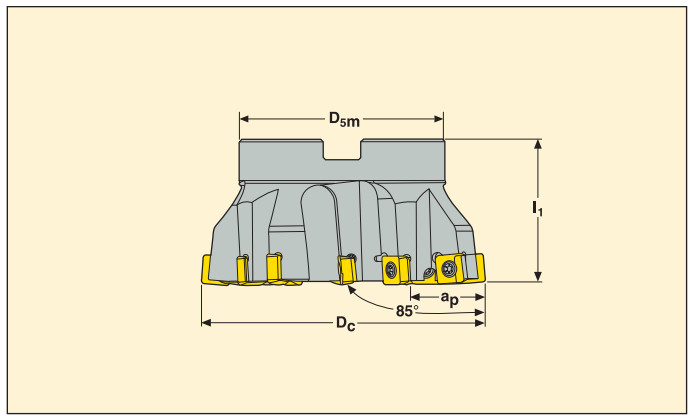

- For insert selection and cutting data recommendations, see page(s) 313-314
- For complete insert programme, see page(s) 617

Part No.	Type of mounting	Dimensions in mm a_p	D_c	D_{5m}	dm_m	l_1		KG		Insert
R220.79 -0100-20	Arbor	20	100	77	32	50	8	1,3	7000	SC..1206
-0125-30	Arbor	30	125	90	40	63	12	2,6	6300	SC..1206
-8160-40	Arbor	40	160	90	40	64	16	4,0	5600	SC..1206

Spare Parts

For cutter	Insert screw	Insert key	Arbor screw
R220.79-0100	C45011-T20P	T20P-4	–
R220.79-0125	C45011-T20P	T20P-4	MC6S20X40
R220.79-8160	C45011-T20P	T20P-4	–

Please check availability in current price and stock-list
Torque value 5,0 Nm, Torque keys, see page 690

R217.79-12– Insert selection

SMG		f_z	a_{so}			
			100%	70%	50%	30%
P1	SCET120612T-M11 F40M	0,16	8,0	8,0	8,0	9,0
P2	SCET120612T-M11 F40M	0,16	8,0	8,0	8,0	9,0
P3	SCET120612T-M11 F40M	0,15	8,0	8,0	8,0	9,0
P4	SCET120612T-M11 MP2500	0,15	8,0	8,0	8,0	9,0
P5	SCET120612T-M11 MP2500	0,15	8,0	8,0	8,0	9,0
P6	SCET120612T-M11 MP2500	0,14	8,0	8,0	8,0	9,0
P7	SCET120612T-M11 MP2500	0,14	8,0	8,0	8,0	9,0
P8	SCET120612T-M11 MP2500	0,15	8,0	8,0	8,0	9,0
P11	SCET120612T-M11 MP2500	0,14	8,0	8,0	8,0	9,0
M1	SCET120612T-M14 T350M	0,20	8,0	8,0	8,0	9,0
M2	SCET120612T-M14 T350M	0,19	8,0	8,0	8,0	9,0
M3	SCET120612T-M14 T350M	0,15	6,0	6,0	6,0	7,0
M4	SCET120612T-M14 T350M	0,13	4,5	4,5	4,5	5,0
M5	SCET120612T-M14 T350M	0,13	4,5	4,5	4,5	5,0
K1	SCET120612T-M14 MK1500	0,20	8,0	8,0	8,0	9,0
K2	SCET120612T-M14 MK1500	0,19	8,0	8,0	8,0	9,0
K3	SCET120612T-M14 MK1500	0,19	8,0	8,0	8,0	9,0
K4	SCET120612T-M14 MK1500	0,19	8,0	8,0	8,0	9,0
K5	SCET120612T-M14 MK1500	0,17	8,0	8,0	8,0	9,0
K6	SCET120612T-M14 MK1500	0,19	8,0	8,0	8,0	9,0
K7	SCET120612T-MD15 MP1500	0,18	8,0	8,0	8,0	9,0
N1	SCET120612T-M11 F40M	0,20	8,0	8,0	8,0	9,0
N2	SCET120612T-M11 F40M	0,20	8,0	8,0	8,0	9,0
N3	SCET120612T-M11 F40M	0,20	8,0	8,0	8,0	9,0
N11	SCET120612T-M11 F40M	0,20	8,0	8,0	8,0	9,0
S1	SCET120612T-M14 T350M	0,13	4,5	4,5	4,5	5,0
S2	SCET120612T-M14 T350M	0,13	4,5	4,5	4,5	5,0
S3	SCET120612T-M14 T350M	0,12	4,5	4,5	4,5	5,0
S11	SCET120612T-M14 F40M	0,15	5,0	5,0	5,0	6,0
S12	SCET120612T-M14 F40M	0,15	5,0	5,0	5,0	6,0
S13	SCET120612T-M14 F40M	0,13	4,5	4,5	4,5	5,0
H5	SCET120612T-MD15 MP1500	0,14	6,0	6,0	6,0	7,0
H8	SCET120612T-MD15 MP1500	0,10	5,0	5,0	5,0	6,0
H11	SCET120612T-MD15 MP1500	0,14	6,0	6,0	6,0	7,0
H12	SCET120612T-MD15 MP1500	0,14	6,0	6,0	6,0	7,0
H21	SCET120612T-MD15 MP1500	0,10	5,0	5,0	5,0	6,0

SMG = Seco material group
f_z = mm/tooth
v_c= m/min
a_e/D_c = %
All cutting data are start values

R217.79-12 – Cutting data v_c = (m/min)

	MP1500				MP2500				T350M				F40M				MK1500			
SMG	100%	70%	50%	30%	100%	70%	50%	30%	100%	70%	50%	30%	100%	70%	50%	30%	100%	70%	50%	30%
P1	280	310	330	360	245	275	295	320	200	225	240	260	175	195	210	225	—	—	—	—
P2	270	305	325	350	240	270	285	310	195	220	235	255	170	190	205	220	—	—	—	—
P3	240	265	285	310	210	235	250	275	170	190	205	220	150	165	180	190	—	—	—	—
P4	210	235	250	270	185	210	220	240	150	170	180	195	130	145	155	170	—	—	—	—
P5	200	225	240	260	180	200	210	230	145	160	170	185	125	140	150	160	—	—	—	—
P6	230	260	275	295	205	230	245	265	165	185	195	215	145	160	170	185	—	—	—	—
P7	220	245	260	280	195	215	230	250	155	175	185	200	135	150	160	175	—	—	—	—
P8	200	225	240	260	180	200	210	230	145	160	170	185	125	140	150	160	—	—	—	—
P11	210	235	250	275	190	210	225	240	150	170	180	195	130	145	155	170	—	—	—	—
M1	—	—	—	—	175	195	205	225	150	170	180	195	135	155	165	175	—	—	—	—
M2	—	—	—	—	145	160	170	185	125	140	150	160	115	125	135	145	—	—	—	—
M3	—	—	—	—	120	130	140	155	105	115	125	135	95	105	110	120	—	—	—	—
M4	—	—	—	—	95	105	115	125	85	90	100	105	75	85	90	95	—	—	—	—
M5	—	—	—	—	80	90	95	100	70	75	80	90	65	70	75	80	—	—	—	—
K1	215	240	255	280	190	215	225	245	155	175	185	200	135	150	160	175	255	280	300	325
K2	190	215	225	245	170	190	200	220	135	155	165	175	120	135	140	155	225	250	265	285
K3	160	180	190	210	145	160	170	185	115	130	140	150	100	115	120	130	190	210	225	245
K4	155	170	185	200	135	155	160	175	110	125	130	145	95	105	115	125	180	200	215	230
K5	95	105	115	125	85	95	100	110	70	75	80	90	60	65	70	75	110	125	130	145
K6	135	150	160	175	120	135	145	155	100	110	115	125	85	95	100	110	160	175	190	205
K7	125	135	145	160	110	120	130	140	90	100	105	115	75	85	90	100	140	160	170	185
N1	—	—	—	—	700	780	830	900	—	—	—	—	485	540	580	630	—	—	—	—
N2	—	—	—	—	570	630	670	730	—	—	—	—	395	440	465	510	—	—	—	—
N3	—	—	—	—	375	420	450	485	—	—	—	—	260	290	310	340	—	—	—	—
N11	—	—	—	—	430	480	510	560	—	—	—	—	300	335	355	385	—	—	—	—
S1	—	—	—	—	46	50	55	60	39	43	46	50	35	39	42	45	—	—	—	—
S2	—	—	—	—	37	42	44	48	31	35	37	40	28	32	34	37	—	—	—	—
S3	—	—	—	—	33	36	39	42	27	31	33	35	25	28	30	32	—	—	—	—
S11	—	—	—	—	65	70	75	80	55	60	65	70	48	55	55	60	—	—	—	—
S12	—	—	—	—	36	40	43	47	30	34	36	39	28	31	33	36	—	—	—	—
S13	—	—	—	—	30	33	36	39	25	28	30	32	23	25	27	29	—	—	—	—
H5	46	50	55	60	37	41	44	48	33	37	39	43	29	32	34	37	—	—	—	—
H8	50	55	60	65	40	45	48	50	36	40	43	46	31	35	37	40	—	—	—	—
H11	60	65	70	75	48	55	55	60	42	47	50	55	37	41	44	48	—	—	—	—
H12	95	105	115	125	75	85	90	100	70	75	80	90	60	65	70	75	—	—	—	—
H21	50	55	60	65	40	45	48	50	36	40	43	46	31	35	37	40	—	—	—	—

Ball nose cutters for copy milling - Selection Table

Cutter	Insert	Material suitability						Corner radius (mm)				No. of cutting edges	Cutter diameter available (mm)/max depth of cut							See page
		P	M	K	N	S	H						16	20	25	30	32	40	50	
R218.20	218.20-080	■	■		◩	■	◩	8.0	■	◩	◩	2	14							356-358
	218.20-100	■	■	■	◩	■	◩	10.0	■	■	◩	2		18						
	218.20-125	■	■	■	◩	■	◩	12.5	■	■	◩	2			22					
	218.20-150	■	■	■	◩	■	◩	15.0	◩	■	◩	2				27				
	218.20-160	■	■	■	◩	■	◩	16.0	◩	■	◩	2					28			
	218.20-200	■	■	■	◩	■	-	20.0	□	■	◩	2						35		
R218.20 long cutting edge	218.20-150 / SPMT10	■	■	■	◩	■	◩	15.0	◩	■	◩	2/4				45				
	218.20-160 / SPMT10	■	■	■	◩	■	◩	16.0	◩	■	◩	2/4					54			
	218.20-200 / SC..12	■	■	■	◩	■	-	20.0	□	■	◩	2/4						60		
	218.20-250 / SC..12	■	■	■	◩	■	-	25.0	□	■	◩	2/4							70	

1st choice	■	High speed machine with low Power/torque	
Alternative choice	◩	Strong stable machine with rigid connection	
Possible choice	□	Unstable condition suitability	
Not recommended	-		

x indicates the maximum depth of cut	x

Ball nose cutters for copy milling - Selection Table

Cutter	Insert	Material suitability						Corner radius (mm)				No. of cutting edges	Cutter diameter available (mm) / max depth of cut							See page
		P	M	K	N	S	H						16	20	25	30	32	40	50	
R218.19	218.19-080/SPMX06	■	◩	■	◩	■	◩	8.0	■	◩	■	3/4	12							378-379
													17							
	218.19-100/SPMX07	■	◩	■	◩	■	◩	10.0	■	■	■	3/4		16						
														21						
	218.19-125/SPMX09	■	■	■	◩	■	◩	12.5	■	■	■	3/4			26					
	218.19-160/SPMT10	■	◩	■	◩	■	◩	16.0	◩	■	■	3/4					30			
																	36			
R218.19 HFA	218.19-125	■	■	■	◩	■	◩	12.5	■	■	■	3			14					380
	218.19-160	■	■	■	◩	■	◩	16.0	◩	■	■	3					18			
	218.19-200	■	■	■	◩	■	□	20.0	□	■	■	3						25		

1st choice	■	High speed machine with low Power/torque	
Alternative choice	◩	Strong stable machine with rigid connection	
Possible choice	□	Unstable condition suitability	
Not recommended	-		

x indicates the maximum depth of cut	x

Round insert cutters

Insert	a_p max	a_p rec	Material suitability									
			P	M	K	N	S	H				
Round 5	2,5	1	■	◪	■	□	■	■	■	◪	■	□
Round 6	3	1	■	■	■	■	◪	■	■	◪	■	□
Round 7	3,5	1,5	■	◪	■	■	◪	■	■	◪	■	□
Round 8	4	1,5	■	■	■	■	■	■	■	◪	■	◪
Round 10	5	2	■	■	■	■	■	■	■	■	■	◪
Round 12	6	3	■	■	■	■	■	■	□	■	■	◪
Round 16	8	5	■	■	■	-	■	◪	-	■	■	◪
Round 20	10	6	■	■	■	-	■	□	-	■	■	◪

1st choice	■	High speed machine with low Power/torque		Unstable condition suitability		a_p max	Max depth of cut
Alternative choice	◪	Strong stable machine with rigid connection		Ramping ability			
Possible choice	□			Plunging ability			
Not recommended	-						

Round insert cutters

Insert	Application	Cutter diameter available (mm) / number of teeth																											Page
		10	12	15	16	20	24	25	32	35	40	42	44	50	52	63	66	75	80	83	84	92	100	112	125	137	160	200	
Round 5		2	3	4		5																							321-322
Round 6			2		3	4		5	6		8																		325-326
Round 7				2	3	4		5																					329
Round 8						2		3						5															332-333
					2	3		4	5		6			7															
Round 10								2	3		3		4																336-337
											4	5																	
						2		3	4	5	5	6		6															
Round 12											3					5			6		6			7		8			340-344
										3			4	4	4	6	6	6	7			7							
								2	3	4	4	5		5	5	7			8				9		11				
Round 16																4	5		5		5		6		6		7		348
									2		3			3	4	5	6		6				7		8		9		
Round 20																			4	4			5		5		6		351-353
											2			3		4			5				6		7			8	

x — x indicates number of teeth (first choice)

x — x indicates number of teeth

Coarse pitch-troubleshooter for unstable conditions & long overhang

Normal pitch-alternative choice

Close pitch-basic choice for productivity

Milling cutters

In milling Seco uses product specific designation systems, there is no ISO system available for cutters. See example below.

Code key for copy milling cutter 217/220.29

Right hand rotation	System	Outer cutting diameter/ ball nose type = cutting diameter		Max. axial cutting depth		Setting length (for the shank for combimaster)	
R	217 . 29 -	16	16 . 0 -	04 .	2 .	140	A
	217 = With shank 220 = For arbor	Shank diameter (connecting thread diameter for Combimaster)	Shank type (.RE for Combimaster)		No. of teeth		A = Through coolant supply E = Solid carbide shank

Dimensions of mounting

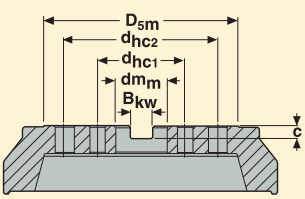

Dimensions in mm						Spindle-nose
D_{5m}	dm_m	B_{kw}	c	d_{hc1}	d_{hc2}	
30-35	16	8,4	5,6	–	–	–
42-47	22	10,4	6.3	–	–	–
48-62	27	12,4	7	–	–	–
60-90	32	14,4	8	–	–	–
90-130	40	16,4	9	66,7	–	(8xxx)
130-270	60	25,7	14	101,6	177,8	(8xxx)

For a more exact D_{5m} and dm_m measurement, see each product table.

R217.29-025

Cutters with round inserts, max. axial cutting depth 2,5 mm

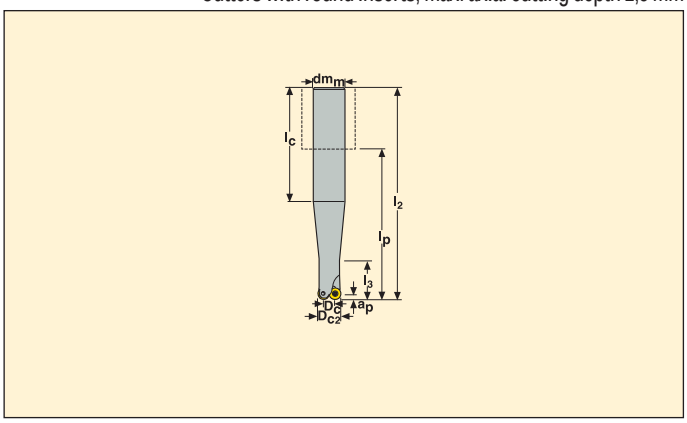

- For insert selection and cutting data recommendations, see page(s) 323-324
- For complete insert programme, see page(s) 614
- For helical interpolation, see page(s) 682-683

Part No.	Type of mounting	Dimensions in mm								α° max		KG		Insert
		a_p	D_{c2}	D_c	dm_m	l_2	l_3	l_p	l_c					
R217.29 -1010.0-025.2.090E	Cylindrical	2,5	10	5	10	130	30	90	100	90	2	0,2	75000	RDH.0501

Ramping angle = α°

Spare Parts

For cutter	Insert screw	Insert key
		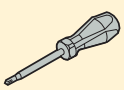
R217.29-..	C02035-T06P	T06P-3

Please check availability in current price and stock-list
Torque value 5,0 Nm, Torque keys, see page 690

R217.29-025

Cutters with round inserts, max. axial cutting depth 2,5 mm

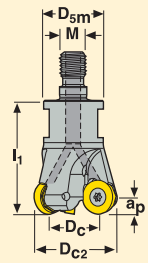

- For insert selection and cutting data recommendations, see page(s) 323-324
- For complete insert programme, see page(s) 614
- For helical interpolation, see page(s) 682-683

Part No.	Type of mounting	Dimensions in mm a_p	D_{c2}	D_c	D_{5m}	l_1	M	α° max		KG		Insert
R217.29 -0610.RE-025.2A	Combimaster	2,5	10	5	11	18	M6	90	2	0,1	75000	RDH.0501
-0612.RE-025.3A	Combimaster	2,5	12	7	11	18	M6	13,9	3	0,1	65000	RDH.0501
-0812.RE-025.3A	Combimaster	2,5	12	7	13,5	20	M8	13,9	3	0,1	65000	RDH.0501
-0815.RE-025.4A	Combimaster	2,5	15	10	13,5	20	M8	8,4	4	0,1	60000	RDH.0501
-1020.RE-025.5A	Combimaster	2,5	20	15	18	23	M10	5	5	0,1	50000	RDH.0501

Ramping angle = α°

For Combimaster shanks and dimensions, see pages 588-598

Spare Parts

For cutter	Insert screw	Insert key
R217.29-..	C02035-T06P	T06P-3

Please check availability in current price and stock-list

Torque value 0,5 Nm. Torque keys, see page 690

R217.29-025 – Insert selection

SMG		a_p	f_z			
			100%	30%	10%	5%
P1	RDHW0501M0-MD01 F40M	1,0	0,095	0,10	0,16	0,22
P2	RDHW0501M0-MD01 F40M	1,0	0,095	0,10	0,16	0,22
P3	RDHW0501M0-MD01 F40M	1,0	0,090	0,10	0,15	0,22
P4	RDHW0501M0-MD01 MP3000	1,0	0,090	0,095	0,15	0,20
P5	RDHW0501M0-MD01 MP3000	1,0	0,085	0,095	0,15	0,20
P6	RDHW0501M0-MD01 MP3000	1,0	0,085	0,095	0,15	0,20
P7	RDHW0501M0-MD01 MP3000	1,0	0,085	0,095	0,15	0,20
P8	RDHW0501M0-MD01 MP3000	1,0	0,090	0,10	0,15	0,22
P11	RDHW0501M0-MD01 MP3000	1,0	0,085	0,095	0,15	0,20
M1	RDHW0501M0-MD01 F40M	1,0	0,095	0,10	0,16	0,22
M2	RDHW0501M0-MD01 F40M	1,0	0,085	0,095	0,15	0,20
M3	RDHW0501M0-MD01 F40M	0,80	0,080	0,085	0,13	0,18
M4	RDHW0501M0-MD01 F40M	0,60	0,080	0,085	0,13	0,19
M5	RDHW0501M0-MD01 F40M	0,60	0,080	0,085	0,13	0,19
K1	RDHW0501M0-MD01 MP3000	1,0	0,095	0,10	0,16	0,22
K2	RDHW0501M0-MD01 MP3000	1,0	0,085	0,095	0,15	0,20
K3	RDHW0501M0-MD01 MP3000	1,0	0,085	0,095	0,15	0,20
K4	RDHW0501M0-MD01 MP3000	1,0	0,085	0,095	0,15	0,20
K5	RDHW0501M0-MD01 MP3000	1,0	0,080	0,085	0,13	0,18
K6	RDHW0501M0-MD01 MP3000	1,0	0,085	0,095	0,15	0,20
K7	RDHW0501M0-MD01 MP3000	1,0	0,080	0,085	0,13	0,18
S1	RDHW0501M0-MD01 F40M	0,60	0,080	0,085	0,13	0,19
S2	RDHW0501M0-MD01 F40M	0,60	0,080	0,085	0,13	0,19
S3	RDHW0501M0-MD01 F40M	0,60	0,075	0,080	0,12	0,17
S11	RDHW0501M0-MD01 F40M	0,65	0,085	0,095	0,15	0,20
S12	RDHW0501M0-MD01 F40M	0,65	0,085	0,095	0,15	0,20
S13	RDHW0501M0-MD01 F40M	0,60	0,080	0,085	0,13	0,19
H5	RDHW0501M0-MD01 MP3000	0,80	0,065	0,070	0,11	0,16
H8	RDHW0501M0-MD01 MP3000	0,65	0,055	0,060	0,095	0,13
H11	RDHW0501M0-MD01 MP3000	0,80	0,065	0,070	0,11	0,16
H12	RDHW0501M0-MD01 F40M	0,80	0,065	0,070	0,11	0,16
H21	RDHW0501M0-MD01 MP3000	0,65	0,055	0,060	0,095	0,13

SMG = Seco material group
f_z = mm/tooth
v_c= m/min
a_e/D_c = %
All cutting data are start values

R217.29-025 – Cutting data v_c = (m/min)

	MP3000				F40M			
SMG	100%	30%	10%	5%	100%	30%	10%	5%
P1	360	490	580	630	285	395	465	510
P2	350	480	570	620	280	385	450	495
P3	305	415	485	540	240	330	390	430
P4	265	365	435	470	215	295	345	375
P5	255	355	415	450	205	280	330	360
P6	290	395	465	510	230	315	370	410
P7	270	375	440	480	220	300	350	385
P8	255	350	410	450	205	280	325	360
P11	265	365	425	470	210	290	340	375
M1	260	360	425	460	225	310	365	395
M2	215	295	345	375	185	255	300	325
M3	170	230	270	300	145	200	235	255
M4	130	175	205	225	110	150	180	195
M5	110	145	170	190	95	125	150	165
K1	275	380	450	490	220	305	360	390
K2	245	335	395	425	195	270	315	340
K3	205	285	335	360	165	225	265	290
K4	195	270	320	345	160	215	255	275
K5	120	160	190	210	95	130	155	170
K6	175	240	280	305	140	190	225	245
K7	150	210	245	270	120	165	195	215
N1	—	—	—	—	—	—	—	—
N2	—	—	—	—	—	—	—	—
N3	—	—	—	—	—	—	—	—
N11	—	—	—	—	—	—	—	—
S1	60	80	95	105	50	70	85	90
S2	49	65	80	85	42	55	65	75
S3	42	60	65	75	36	50	60	65
S11	85	115	135	150	75	100	120	130
S12	49	65	80	85	43	60	70	75
S13	39	55	60	70	34	46	55	60
H5	50	70	80	90	44	60	70	75
H8	55	70	85	95	46	60	70	80
H11	65	90	105	115	55	75	90	95
H12	100	135	160	170	85	115	135	145
H21	55	70	85	95	46	60	70	80

R217.29-03

Cutters with round inserts, max. axial cutting depth 3 mm

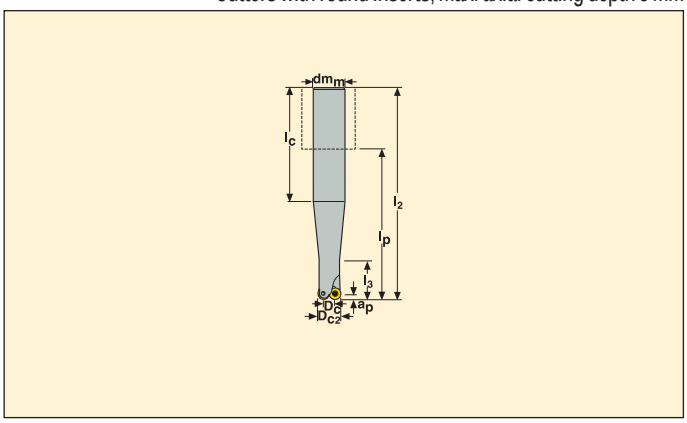

- For insert selection and cutting data recommendations, see page(s) 327-328
- For complete insert programme, see page(s) 614
- For helical interpolation, see page(s) 682-683

Part No.	Type of mounting	Dimensions in mm a_p	D_{c2}	D_c	dm_m	l_2	l_3	l_p	l_c	α° max		KG		Insert
R217.29 -1612.0-03.2.050	Cylindrical	3	12	06	16	110	20	50	60	90	2	0,2	32000	RD..06T1
-1212.0-03.2.070E	Cylindrical	3	12	06	12	130	50	70	80	90	2	0,2	32000	RD..06T1
R217.29 -2016.0-03.3.070	Cylindrical	3	16	10	20	130	30	70	60	15,62	3	0,3	28800	RD..06T1
-1616.0-03.3.100E	Cylindrical	3	16	10	16	160	50	100	140	15,62	3	0,5	28800	RD..06T1
R217.29 -1620.0-03.4.100E	Cylindrical	3	20	14	16	160	100	100	140	9,84	4	0,5	25600	RD..06T1

Ramping angle = α°

Spare Parts

For cutter	Insert screw	Insert key
		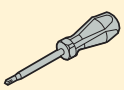
Dia. 12-16	C02204-T07P	T07P-3
Dia. 20-32	C02245-T07P	T07P-3

Please check availability in current price and stock-list

Torque value 0,9 Nm, Torque keys, see page 690

R217/220.29-03

Cutters with round inserts, max. axial cutting depth 3 mm

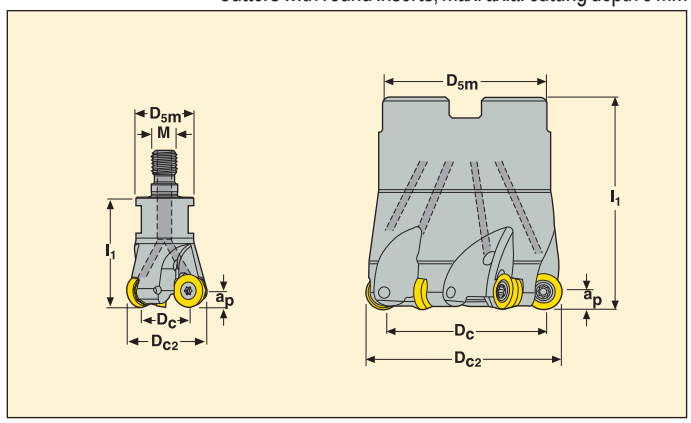

- For insert selection and cutting data recommendations, see page(s) 327-328
- For complete insert programme, see page(s) 614
- For helical interpolation, see page(s) 682-683

Part No.	Type of mounting	Dimensions in mm							α° max		KG		Insert
		a_p	D_{c2}	D_c	D_{5m}	dm_m	l_1	M					
R217.29 -0816.RE-03.3	Combimaster	3	16	10	13,5	–	23	M8	15,62	3	0,1	28800	RD..06T1
R217.29 -1020.RE-03.4A	Combimaster	3	20	14	18,5	–	28	M10	9,84	4	0,1	25600	RD..06T1
R217.29 -1225.RE-03.5A	Combimaster	3	25	19	23	–	28	M12	6,76	5	0,1	23200	RD..06T1
R217.29 -1632.RE-03.6A	Combimaster	3	32	26	30	–	28	M16	4,7	6	0,2	20000	RD..06T1
R217.29 -1635.RE-03.7A	Combimaster	3	35	29	30	–	28	M16	4,16	7	0,2	19200	RD..06T1
R220.29 -0040-03.8A	Arbor	3	40	34	35	16	35	–	3,49	8	0,2	17600	RD..06T1

Ramping angle = α°

For Combimaster shanks and dimensions, see pages 588-598

Spare Parts

For cutter	Insert screw	Insert key	Arbor screw
Dia. 12-16	C02204-T07P	T07P-3	–
Dia. 20-32	C02245-T07P	T07P-3	–
R220.29-0040	C02245-T07P	T07P-3	220.17-689

Please check availability in current price and stock-list

Torque value 0,9 Nm, Torque keys, see page 690

R217/220.29-03 – Insert selection

SMG		a_p	f_z			
			100%	30%	10%	5%
P1	RDHT06T1M0-E02 F40M	1,2	0,065	0,070	0,11	0,15
P2	RDHT06T1M0-E02 F40M	1,2	0,065	0,070	0,11	0,15
P3	RDHT06T1M0-E02 F40M	1,2	0,060	0,065	0,10	0,14
P4	RDHW06T1M0-MD02 MP3000	1,2	0,090	0,095	0,15	0,20
P5	RDHW06T1M0-MD02 MP3000	1,2	0,085	0,095	0,15	0,20
P6	RDHW06T1M0-MD02 MP3000	1,2	0,085	0,095	0,15	0,20
P7	RDHW06T1M0-MD02 MP3000	1,2	0,085	0,095	0,15	0,20
P8	RDHW06T1M0-MD02 MP3000	1,2	0,090	0,10	0,15	0,22
P11	RDHW06T1M0-MD02 MP3000	1,2	0,085	0,095	0,15	0,20
M1	RDHT06T1M0-E02 F40M	1,2	0,065	0,070	0,11	0,15
M2	RDHT06T1M0-E02 F40M	1,2	0,060	0,065	0,10	0,14
M3	RDHT06T1M0-E02 F40M	0,95	0,050	0,055	0,090	0,12
M4	RDHW06T1M0-MD02 MP3000	0,75	0,075	0,085	0,13	0,18
M5	RDHW06T1M0-MD02 MP3000	0,75	0,075	0,085	0,13	0,18
K1	RDHW06T1M0-MD02 MK2050	1,2	0,095	0,10	0,16	0,22
K2	RDHW06T1M0-MD02 MK2050	1,2	0,085	0,095	0,15	0,20
K3	RDHW06T1M0-MD02 MK2050	1,2	0,085	0,095	0,15	0,20
K4	RDHW06T1M0-MD02 MK2050	1,2	0,085	0,095	0,15	0,20
K5	RDHW06T1M0-MD02 MK2050	1,2	0,080	0,085	0,13	0,18
K6	RDHW06T1M0-MD02 MK2050	1,2	0,085	0,095	0,15	0,20
K7	RDHW06T1M0-MD02 MK2050	1,2	0,080	0,085	0,13	0,18
N1	RDHT06T1M0-E02 H25	1,2	0,080	0,090	0,14	0,19
N2	RDHT06T1M0-E02 H25	1,2	0,080	0,090	0,14	0,19
N3	RDHT06T1M0-E02 H25	1,2	0,080	0,090	0,14	0,19
N11	RDHT06T1M0-E02 H25	1,2	0,080	0,090	0,14	0,19
S1	RDHW06T1M0-MD02 F40M	0,75	0,075	0,085	0,13	0,18
S2	RDHW06T1M0-MD02 F40M	0,75	0,075	0,085	0,13	0,18
S3	RDHW06T1M0-MD02 MP3000	0,75	0,070	0,080	0,12	0,17
S11	RDHW06T1M0-MD02 F40M	0,85	0,085	0,090	0,14	0,20
S12	RDHW06T1M0-MD02 F40M	0,85	0,085	0,090	0,14	0,20
S13	RDHW06T1M0-MD02 F40M	0,75	0,075	0,085	0,13	0,18
H5	RDHW06T1M0-MD02 F15M	0,95	0,065	0,075	0,11	0,16
H8	RDHW06T1M0-MD02 F15M	0,85	0,055	0,060	0,090	0,13
H11	RDHW06T1M0-MD02 F15M	0,95	0,065	0,075	0,11	0,16
H12	RDHW06T1M0-MD02 F40M	0,95	0,065	0,075	0,11	0,16
H21	RDHW06T1M0-MD02 F15M	0,85	0,055	0,060	0,090	0,13

SMG = Seco material group
f_z = mm/tooth
v_c= m/min
a_e/D_c = %
All cutting data are start values

R217/220.29-03 – Cutting data v_c = (m/min)

	MP3000				F15M				F40M				MK2050			
SMG	100%	30%	10%	5%	100%	30%	10%	5%	100%	30%	10%	5%	100%	30%	10%	5%
P1	345	475	560	610	—	—	—	—	275	380	445	485	360	490	580	630
P2	335	455	540	590	—	—	—	—	270	365	435	475	350	475	560	610
P3	295	395	465	510	—	—	—	—	235	315	375	410	305	410	485	530
P4	260	350	410	450	—	—	—	—	205	280	330	360	270	365	425	470
P5	250	335	395	430	—	—	—	—	200	270	320	345	260	350	415	450
P6	280	375	445	485	—	—	—	—	225	300	355	390	290	395	465	500
P7	265	355	420	455	—	—	—	—	210	285	335	365	275	370	440	475
P8	245	335	390	430	—	—	—	—	195	265	315	345	255	345	405	450
P11	255	345	410	445	—	—	—	—	205	275	325	355	265	360	425	460
M1	250	340	405	440	—	—	—	—	215	295	350	380	—	—	—	—
M2	210	280	330	360	—	—	—	—	180	240	285	310	—	—	—	—
M3	165	220	260	285	—	—	—	—	140	190	225	245	—	—	—	—
M4	125	170	200	215	—	—	—	—	110	145	170	185	—	—	—	—
M5	105	140	165	180	—	—	—	—	90	120	140	155	—	—	—	—
K1	265	360	430	470	255	345	410	450	215	290	345	375	380	510	610	660
K2	235	320	375	410	225	305	360	395	190	255	300	330	335	450	530	580
K3	200	270	320	345	190	260	305	335	160	215	255	275	285	380	450	490
K4	190	260	305	330	185	245	290	320	155	205	245	265	270	365	430	470
K5	115	155	185	200	110	150	175	195	90	125	145	160	165	220	260	285
K6	170	225	270	290	160	220	260	280	135	180	215	235	240	320	380	415
K7	145	200	235	255	140	190	225	245	120	160	190	205	210	285	335	365
N1	—	—	—	—	—	—	—	—	—	—	—	—	—	—	—	—
N2	—	—	—	—	—	—	—	—	—	—	—	—	—	—	—	—
N3	—	—	—	—	—	—	—	—	—	—	—	—	—	—	—	—
N11	—	—	—	—	—	—	—	—	—	—	—	—	—	—	—	—
S1	60	80	95	100	—	—	—	—	50	65	80	85	—	—	—	—
S2	47	65	75	80	—	—	—	—	41	55	65	70	—	—	—	—
S3	41	55	65	70	—	—	—	—	35	47	55	60	—	—	—	—
S11	80	110	130	145	—	—	—	—	70	95	115	125	—	—	—	—
S12	48	65	75	85	—	—	—	—	41	55	65	70	—	—	—	—
S13	38	50	60	65	—	—	—	—	33	44	50	55	—	—	—	—
H5	50	65	80	85	50	70	80	90	43	55	70	75	—	—	—	—
H8	50	70	80	90	55	70	85	90	44	60	70	75	—	—	—	—
H11	65	85	100	110	65	85	105	110	55	75	85	95	—	—	—	—
H12	95	130	150	165	100	130	155	170	80	110	130	140	—	—	—	—
H21	50	70	80	90	55	70	85	90	44	60	70	75	—	—	—	—

R217/220.29-03 – Cutting data v_c = (m/min)

	H25			
SMG	100%	30%	10%	5%
P1	—	—	—	—
P2	—	—	—	—
P3	—	—	—	—
P4	—	—	—	—
P5	—	—	—	—
P6	—	—	—	—
P7	—	—	—	—
P8	—	—	—	—
P11	—	—	—	—
M1	—	—	—	—
M2	—	—	—	—
M3	—	—	—	—
M4	—	—	—	—
M5	—	—	—	—
K1	—	—	—	—
K2	—	—	—	—
K3	—	—	—	—
K4	—	—	—	—
K5	—	—	—	—
K6	—	—	—	—
K7	—	—	—	—
N1	940	1275	1475	1625
N2	760	1025	1200	1325
N3	510	680	800	880
N11	580	780	910	1000
S1	—	—	—	—
S2	—	—	—	—
S3	—	—	—	—
S11	—	—	—	—
S12	—	—	—	—
S13	—	—	—	—
H5	—	—	—	—
H8	—	—	—	—
H11	—	—	—	—
H12	—	—	—	—
H21	—	—	—	—

R217.29-035

Cutters with round inserts, max. axial cutting depth 3,5 mm

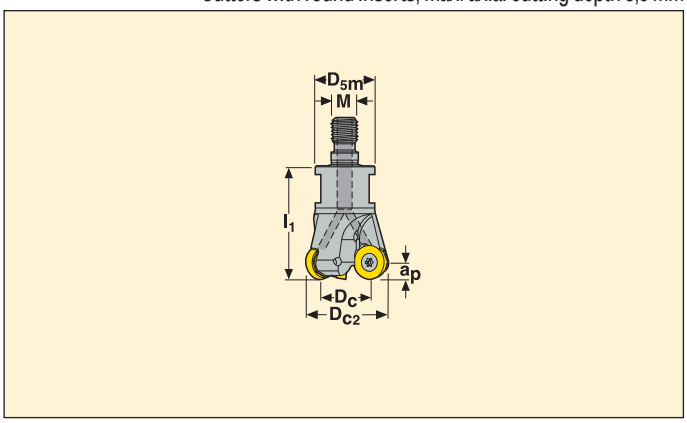

- For insert selection and cutting data recommendations, see page(s) 330-331
- For complete insert programme, see page(s) 614
- For helical interpolation, see page(s) 682-683

Part No.	Type of mounting	Dimensions in mm a_p	D_{c2}	D_c	D_{5m}	l_1	M	α° max		KG		Insert
R217.29 -0816.RE-035.3A	Combimaster	3,5	16	9	13,5	20	M8	17,8	3	0,1	48000	RDH.0702
R217.29 -1020.RE-035.4A	Combimaster	3,5	20	13	18,5	23	M10	10,4	4	0,1	44000	RDH.0702
R217.29 -1225.RE-035.5A	Combimaster	3,5	25	18	23	28	M12	6,9	5	0,1	35000	RDH.0702

Ramping angle = α°

For Combimaster shanks and dimensions, see pages 588-598

Spare Parts

For cutter	Insert screw	Insert key
R217.29-..	C02545-T07P	T07P-3

Please check availability in current price and stock-list

Torque value 0,9 Nm, Torque keys, see page 690

R217.29-035 – Insert selection

SMG		a_p	f_z			
			100%	30%	10%	5%
P1	RDHW0702M0-MD03 F40M	1,4	0,13	0,14	0,22	0,30
P2	RDHW0702M0-MD03 F40M	1,4	0,13	0,14	0,22	0,30
P3	RDHW0702M0-MD03 F40M	1,4	0,12	0,13	0,20	0,28
P4	RDHW0702M0-MD03 MP3000	1,4	0,12	0,13	0,20	0,28
P5	RDHW0702M0-MD03 MP3000	1,4	0,12	0,13	0,20	0,28
P6	RDHW0702M0-MD03 MP3000	1,4	0,12	0,13	0,20	0,28
P7	RDHW0702M0-MD03 MP3000	1,4	0,12	0,13	0,20	0,28
P8	RDHW0702M0-MD03 MP3000	1,4	0,12	0,13	0,20	0,28
P11	RDHW0702M0-MD03 MP3000	1,4	0,12	0,13	0,20	0,28
M1	RDHW0702M0-MD03 F40M	1,4	0,13	0,14	0,22	0,30
M2	RDHW0702M0-MD03 F40M	1,4	0,12	0,13	0,20	0,28
M3	RDHW0702M0-MD03 F40M	1,1	0,10	0,11	0,18	0,24
M4	RDHW0702M0-MD03 F40M	0,80	0,11	0,12	0,18	0,26
M5	RDHW0702M0-MD03 F40M	0,80	0,11	0,12	0,18	0,26
K1	RDHW0702M0T-MD04 MK2050	1,4	0,13	0,14	0,22	0,30
K2	RDHW0702M0T-MD04 MK2050	1,4	0,12	0,13	0,20	0,28
K3	RDHW0702M0T-MD04 MK2050	1,4	0,12	0,13	0,20	0,28
K4	RDHW0702M0T-MD04 MK2050	1,4	0,12	0,13	0,20	0,28
K5	RDHW0702M0T-MD04 MK2050	1,4	0,10	0,11	0,18	0,24
K6	RDHW0702M0T-MD04 MK2050	1,4	0,12	0,13	0,20	0,28
K7	RDHW0702M0T-MD04 MK2050	1,4	0,10	0,11	0,18	0,24
S1	RDHW0702M0-MD03 F40M	0,80	0,11	0,12	0,18	0,26
S2	RDHW0702M0-MD03 F40M	0,80	0,11	0,12	0,18	0,26
S3	RDHW0702M0-MD03 F40M	0,80	0,10	0,11	0,17	0,24
S11	RDHW0702M0-MD03 F40M	0,95	0,11	0,12	0,19	0,26
S12	RDHW0702M0-MD03 F40M	0,95	0,11	0,12	0,19	0,26
S13	RDHW0702M0-MD03 F40M	0,80	0,11	0,12	0,18	0,26
H5	RDHW0702M0T-MD04 F15M	1,1	0,090	0,095	0,15	0,22
H8	RDHW0702M0T-MD04 F15M	0,95	0,075	0,080	0,12	0,17
H11	RDHW0702M0T-MD04 F15M	1,1	0,090	0,095	0,15	0,22
H12	RDHW0702M0-MD03 F40M	1,1	0,090	0,095	0,15	0,22
H21	RDHW0702M0T-MD04 F15M	0,95	0,075	0,080	0,12	0,17

SMG = Seco material group
f_z = mm/tooth
v_c= m/min
a_e/D_c = %
All cutting data are start values

R217.29-035 – Cutting data v_c = (m/min)

	MP3000				F15M				F40M				MK2050			
SMG	100%	30%	10%	5%	100%	30%	10%	5%	100%	30%	10%	5%	100%	30%	10%	5%
P1	325	450	520	570	—	—	—	—	260	360	420	460	335	465	540	600
P2	315	430	510	560	—	—	—	—	250	345	405	445	325	445	530	580
P3	275	375	440	480	—	—	—	—	220	300	355	385	285	390	460	500
P4	240	330	390	430	—	—	—	—	195	265	310	345	250	345	405	445
P5	230	315	370	410	—	—	—	—	185	250	300	330	240	330	385	425
P6	260	360	425	460	—	—	—	—	210	290	340	370	270	375	440	480
P7	245	340	400	435	—	—	—	—	195	270	320	350	255	355	415	450
P8	230	315	370	405	—	—	—	—	185	250	300	325	240	330	385	420
P11	240	330	390	420	—	—	—	—	190	265	310	340	250	345	405	440
M1	235	320	380	415	—	—	—	—	205	275	330	360	—	—	—	—
M2	195	265	310	345	—	—	—	—	165	225	270	295	—	—	—	—
M3	155	210	245	270	—	—	—	—	135	180	210	235	—	—	—	—
M4	120	160	190	205	—	—	—	—	105	135	165	180	—	—	—	—
M5	100	135	160	175	—	—	—	—	85	115	135	150	—	—	—	—
K1	250	340	405	440	240	325	385	425	200	270	320	355	355	480	570	630
K2	220	300	355	390	210	285	340	375	175	240	280	310	310	425	500	550
K3	185	255	300	330	180	245	285	315	150	205	240	265	265	360	425	465
K4	175	240	285	315	170	230	275	300	140	195	230	250	250	340	405	445
K5	110	150	175	190	105	145	165	185	90	120	140	155	155	210	245	270
K6	155	215	250	275	150	205	240	265	125	170	200	220	220	300	355	390
K7	140	190	225	245	135	185	215	235	110	150	180	195	200	270	315	345
S1	55	75	90	95	—	—	—	—	48	65	75	85	—	—	—	—
S2	45	60	70	80	—	—	—	—	39	50	60	65	—	—	—	—
S3	39	50	60	70	—	—	—	—	34	45	55	60	—	—	—	—
S11	80	105	125	135	—	—	—	—	70	90	105	120	—	—	—	—
S12	45	60	70	80	—	—	—	—	39	55	60	70	—	—	—	—
S13	36	48	55	65	—	—	—	—	31	41	49	55	—	—	—	—
H5	47	65	75	80	49	65	75	85	40	55	65	70	—	—	—	—
H8	50	65	80	85	50	70	80	90	42	55	65	75	—	—	—	—
H11	60	80	95	105	60	85	100	105	50	70	80	90	—	—	—	—
H12	90	125	145	160	95	125	150	160	80	105	125	135	—	—	—	—
H21	50	65	80	85	50	70	80	90	42	55	65	75	—	—	—	—

R217.29-04

Cutters with round inserts, max. axial cutting depth 4 mm

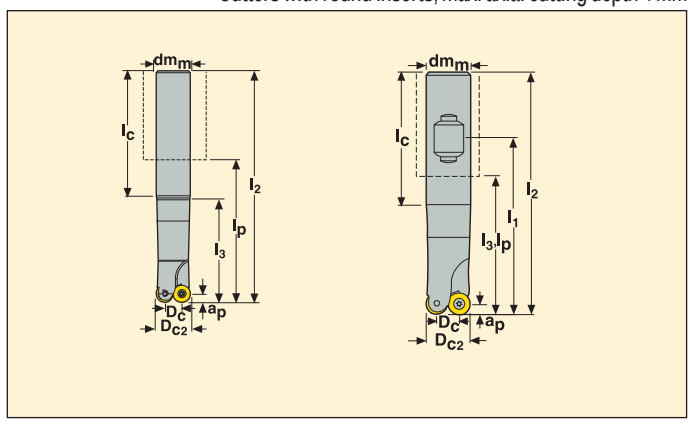

- For insert selection and cutting data recommendations, see page(s) 334-335
- For complete insert programme, see page(s) 614
- For helical interpolation, see page(s) 682-683

Part No.	Type of mounting	Dimensions in mm								α° max		KG		Insert
		a_p	D_{c2}	D_c	dm_m	l_2	l_3	l_p	l_c					
R217.29 -1616.0-04.2.050	Cylindrical	4	16	8	16	110	50	50	60	90	2	0,2	36200	RD..0803
-1616.0-04.2.100E	Cylindrical	4	16	8	16	160	100	100	95	90	2	0,5	36200	RD..0803
R217.29 -1616.3-04.2.040	Cyl.-Weldon	4	16	8	16	88	38	40	48	90	2	0,2	36200	RD..0803

Ramping angle = α°

Spare Parts

For cutter	Insert screw	Insert key
		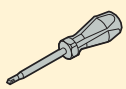
R217.69-..Dia 16	C02505-T08P	T08P-3

Please check availability in current price and stock-list

Torque value 1,2 Nm, Torque keys, see page 690

R217/220.29-04

Cutters with round inserts, max. axial cutting depth 4 mm

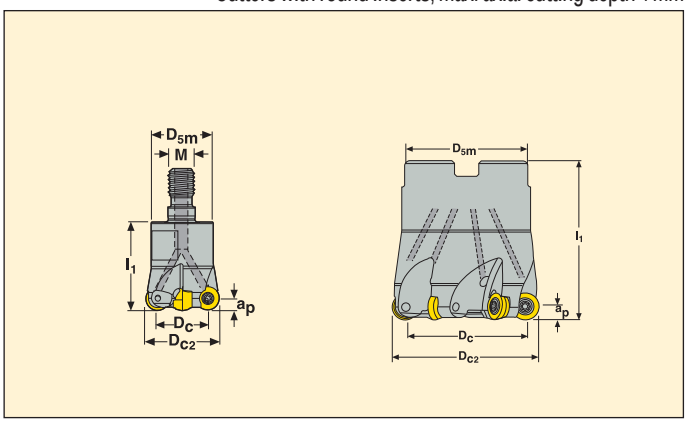

- For insert selection and cutting data recommendations, see page(s) 334-335
- For complete insert programme, see page(s) 614
- For helical interpolation, see page(s) 682-683

Part No.	Type of mounting	Dimensions in mm a_p	D_{c2}	D_c	D_{5m}	dm_m	l_1	M	α° max		KG		Insert
R217.29 -0816.RE-04.2	Combimaster	4	16	8	13,5	–	23	M8	90	2	0,1	36200	RD..0803
R217.29 -1020.RE-04.2A	Combimaster	4	20	12	18,5	–	28	M10	16,43	2	0,1	32400	RD..0803
-1020.RE-04.3A	Combimaster	4	20	12	18,5	–	28	M10	16,43	3	0,1	32400	RD..0803
R217.29 -1225.RE-04.4A	Combimaster	4	25	17	23	–	30	M12	10,01	4	0,1	29000	RD..0803
R217.29 -1632.RE-04.5A	Combimaster	4	32	24	30	–	40	M16	6,51	5	0,2	26100	RD..0803
R217.29 -1640.RE-04.6A	Combimaster	4	40	32	30	–	40	M16	4,66	6	0,3	23300	RD..0803
R217.29 -2040.RE-04.6A	Combimaster	4	40	32	36,5	–	40	M20	4,66	6	0,4	23300	RD..0803
R220.29 -0050-04.5A	Arbor	4	50	42	42	22	40	–	3,44	5	0,4	17300	RD..0803
-0050-04.7A	Arbor	4	50	42	42	22	40	–	3,44	7	0,4	17300	RD..0803

Ramping angle = α°

For Combimaster shanks and dimensions, see pages 588-598

Spare Parts

For cutter	Insert screw	Insert key	Arbor screw
R217.69-..Dia 16	C02505-T08P	T08P-3	–
R217.29-..Dia 20-40	C02506-T08P	T08P-3	–
R217.29-2040-04	C02506-T08P	T08P-3	–
R220.29-..	C02506-T08P	T08P-3	220.17-692

Please check availability in current price and stock-list

Torque value 1,2 Nm, Torque keys, see page 690

R217220.29-04 – Insert selection

SMG		a_p	f_z			
			100%	30%	10%	5%
P1	RDHT0803M0-E03 T350M	1,6	0,095	0,10	0,16	0,22
P2	RDHT0803M0-E03 T350M	1,6	0,095	0,10	0,16	0,22
P3	RDHT0803M0-E03 T350M	1,6	0,090	0,10	0,15	0,22
P4	RDKW0803M0T-MD05 MS2500	1,6	0,15	0,16	0,24	0,34
P5	RDKW0803M0T-MD05 MS2500	1,6	0,15	0,16	0,24	0,34
P6	RDKW0803M0T-MD05 MS2500	1,6	0,14	0,16	0,24	0,34
P7	RDKW0803M0T-MD05 MS2500	1,6	0,14	0,16	0,24	0,34
P8	RDKW0803M0T-MD05 MP2500	1,6	0,15	0,17	0,26	0,36
P11	RDKW0803M0T-MD05 MS2500	1,6	0,14	0,16	0,24	0,34
M1	RDHW0803M0-MD03 F40M	1,6	0,13	0,14	0,22	0,30
M2	RDHW0803M0-MD03 F40M	1,6	0,12	0,13	0,19	0,26
M3	RDHW0803M0-MD03 F40M	1,3	0,10	0,11	0,17	0,24
M4	RDHW0803M0-MD03 F40M	0,95	0,11	0,12	0,18	0,24
M5	RDHW0803M0-MD03 F40M	0,95	0,11	0,12	0,18	0,24
K1	RDKW0803M0T-MD05 MK2050	1,6	0,16	0,17	0,26	0,38
K2	RDKW0803M0T-MD05 MK2050	1,6	0,15	0,16	0,24	0,34
K3	RDKW0803M0T-MD05 MK2050	1,6	0,15	0,16	0,24	0,34
K4	RDKW0803M0T-MD05 MK2050	1,6	0,15	0,16	0,24	0,34
K5	RDKW0803M0T-MD05 MK2050	1,6	0,13	0,14	0,22	0,30
K6	RDKW0803M0T-MD05 MK2050	1,6	0,15	0,16	0,24	0,34
K7	RDKW0803M0T-MD05 MK2050	1,6	0,13	0,14	0,22	0,30
N1	RDHT0803M0-E03 H25	1,6	0,12	0,13	0,20	0,28
N2	RDHT0803M0-E03 H25	1,6	0,12	0,13	0,20	0,28
N3	RDHT0803M0-E03 H25	1,6	0,12	0,13	0,20	0,28
N11	RDHT0803M0-E03 H25	1,6	0,12	0,13	0,20	0,28
S1	RDHW0803M0-MD03 F40M	0,95	0,11	0,12	0,18	0,24
S2	RDHW0803M0-MD03 F40M	0,95	0,11	0,12	0,18	0,24
S3	RDHW0803M0-MD03 F40M	0,95	0,10	0,11	0,16	0,22
S11	RDHW0803M0-MD03 MS2050	1,1	0,11	0,12	0,19	0,26
S12	RDHW0803M0-MD03 MS2050	1,1	0,11	0,12	0,19	0,26
S13	RDHW0803M0-MD03 MS2050	0,95	0,11	0,12	0,18	0,24
H5	RDKW0803M0T-MD05 F15M	1,3	0,11	0,12	0,18	0,26
H8	RDKW0803M0T-MD05 F15M	1,1	0,090	0,10	0,15	0,22
H11	RDKW0803M0T-MD05 F15M	1,3	0,11	0,12	0,18	0,26
H12	RDHW0803M0-MD03 F40M	1,3	0,090	0,095	0,15	0,20
H21	RDKW0803M0T-MD05 F15M	1,1	0,090	0,10	0,15	0,22

SMG = Seco material group
f_z = mm/tooth
v_c= m/min
a_e/D_c = %
All cutting data are start values

R217/220.29-04 – Cutting data v_c = (m/min)

	MP2500				MP3000				T350M				F15M				F25M			
SMG	100%	30%	10%	5%	100%	30%	10%	5%	100%	30%	10%	5%	100%	30%	10%	5%	100%	30%	10%	5%
P1	330	450	530	580	330	445	530	580	370	500	590	650	—	—	—	—	275	375	440	485
P2	325	440	520	570	320	435	520	560	360	485	570	630	—	—	—	—	270	365	430	475
P3	280	385	455	495	280	380	450	490	315	425	500	540	—	—	—	—	235	320	380	415
P4	250	340	400	435	245	335	395	435	275	375	440	485	—	—	—	—	205	280	335	365
P5	235	320	385	425	235	320	375	415	265	360	420	460	—	—	—	—	200	270	320	355
P6	270	365	435	475	265	360	430	465	300	405	470	520	—	—	—	—	225	305	360	395
P7	255	345	410	450	250	340	405	440	280	380	445	490	—	—	—	—	215	290	340	375
P8	235	320	380	415	235	320	375	415	265	355	420	455	—	—	—	—	200	270	320	345
P11	250	335	395	435	245	330	395	425	275	370	430	475	—	—	—	—	205	280	330	365
M1	235	315	370	410	240	325	385	420	280	375	440	485	—	—	—	—	—	—	—	—
M2	190	260	310	340	195	265	315	345	230	310	360	395	—	—	—	—	—	—	—	—
M3	155	210	245	270	160	215	250	275	180	240	285	310	—	—	—	—	—	—	—	—
M4	120	160	190	205	120	165	190	210	140	185	220	240	—	—	—	—	—	—	—	—
M5	100	130	155	170	100	135	160	175	115	155	180	200	—	—	—	—	—	—	—	—
K1	255	350	410	450	255	345	410	445	—	—	—	—	235	315	370	410	215	290	340	375
K2	225	305	365	400	225	305	360	395	—	—	—	—	205	280	330	365	185	255	305	335
K3	190	260	310	340	190	255	305	330	—	—	—	—	175	235	280	310	160	215	260	285
K4	180	245	295	325	180	245	290	315	—	—	—	—	165	225	270	295	150	205	245	270
K5	110	150	180	195	110	150	175	195	—	—	—	—	100	140	160	180	95	125	150	165
K6	160	220	260	285	160	215	255	280	—	—	—	—	145	200	235	260	135	180	215	240
K7	145	195	225	250	145	195	225	250	—	—	—	—	130	175	205	230	120	160	190	210
N1	—	—	—	—	—	—	—	—	—	—	—	—	—	—	—	—	—	—	—	—
N2	—	—	—	—	—	—	—	—	—	—	—	—	—	—	—	—	—	—	—	—
N3	—	—	—	—	—	—	—	—	—	—	—	—	—	—	—	—	—	—	—	—
N11	—	—	—	—	—	—	—	—	—	—	—	—	—	—	—	—	—	—	—	—
S1	—	—	—	—	55	75	90	100	65	85	100	110	—	—	—	—	—	—	—	—
S2	—	—	—	—	45	60	70	80	50	70	80	90	—	—	—	—	—	—	—	—
S3	—	—	—	—	40	55	65	70	45	60	70	80	—	—	—	—	—	—	—	—
S11	—	—	—	—	80	110	130	140	90	120	145	160	—	—	—	—	—	—	—	—
S12	—	—	—	—	46	60	75	80	55	70	85	90	—	—	—	—	—	—	—	—
S13	—	—	—	—	36	49	60	65	42	55	65	70	—	—	—	—	—	—	—	—
H5	—	—	—	—	48	65	75	85	55	75	90	100	47	65	75	85	—	—	—	—
H8	—	—	—	—	50	65	80	85	60	80	95	100	50	65	80	85	—	—	—	—
H11	—	—	—	—	60	80	95	105	75	95	115	125	60	80	95	105	—	—	—	—
H12	—	—	—	—	90	125	145	160	110	145	170	190	90	125	145	160	—	—	—	—
H21	—	—	—	—	50	65	80	85	60	80	95	100	50	65	80	85	—	—	—	—

R217/220.29-04 – Cutting data v_c = (m/min)

	F40M				MK2050				MS2050				MS2500				H25			
SMG	100%	30%	10%	5%	100%	30%	10%	5%	100%	30%	10%	5%	100%	30%	10%	5%	100%	30%	10%	5%
P1	265	355	425	460	325	445	520	570	—	—	—	—	360	490	580	640	—	—	—	—
P2	255	350	410	450	320	435	510	560	—	—	—	—	350	480	560	620	—	—	—	—
P3	225	305	360	395	280	380	445	490	—	—	—	—	310	420	495	540	—	—	—	—
P4	195	270	315	345	245	335	395	430	—	—	—	—	270	370	435	475	—	—	—	—
P5	190	255	300	330	235	315	380	415	—	—	—	—	260	350	420	460	—	—	—	—
P6	210	285	345	370	265	360	425	470	—	—	—	—	295	400	470	520	—	—	—	—
P7	200	270	325	350	250	340	400	440	—	—	—	—	280	380	445	490	—	—	—	—
P8	190	255	300	330	235	315	375	410	—	—	—	—	260	350	415	455	—	—	—	—
P11	195	265	315	340	245	330	390	430	—	—	—	—	270	365	435	475	—	—	—	—
M1	205	280	330	365	—	—	—	—	—	—	—	—	250	345	405	445	—	—	—	—
M2	170	230	270	300	—	—	—	—	—	—	—	—	205	280	335	370	—	—	—	—
M3	135	185	215	235	—	—	—	—	—	—	—	—	165	225	265	290	—	—	—	—
M4	105	140	165	180	—	—	—	—	—	—	—	—	130	170	205	225	—	—	—	—
M5	85	115	140	150	—	—	—	—	—	—	—	—	105	145	170	185	—	—	—	—
K1	205	275	325	355	345	465	550	600	—	—	—	—	—	—	—	—	—	—	—	—
K2	180	245	285	315	300	410	490	540	—	—	—	—	—	—	—	—	—	—	—	—
K3	150	205	240	265	255	345	415	455	—	—	—	—	—	—	—	—	—	—	—	—
K4	145	195	230	255	245	330	395	435	—	—	—	—	—	—	—	—	—	—	—	—
K5	90	120	140	155	150	205	240	265	—	—	—	—	—	—	—	—	—	—	—	—
K6	125	175	205	225	215	290	350	385	—	—	—	—	—	—	—	—	—	—	—	—
K7	115	155	180	200	190	260	305	335	—	—	—	—	—	—	—	—	—	—	—	—
N1	—	—	—	—	—	—	—	—	—	—	—	—	—	—	—	—	890	1200	1425	1575
N2	—	—	—	—	—	—	—	—	—	—	—	—	—	—	—	—	720	980	1150	1275
N3	—	—	—	—	—	—	—	—	—	—	—	—	—	—	—	—	480	650	770	840
N11	—	—	—	—	—	—	—	—	—	—	—	—	—	—	—	—	550	740	880	960
S1	48	65	75	85	—	—	—	—	60	70	80	80	65	85	100	110	—	—	—	—
S2	39	55	60	70	—	—	—	—	47	55	65	65	50	70	80	90	—	—	—	—
S3	34	46	55	60	—	—	—	—	41	50	55	55	44	60	70	75	—	—	—	—
S11	70	95	110	120	—	—	—	—	85	100	115	120	90	120	140	155	—	—	—	—
S12	40	55	65	70	—	—	—	—	65	80	85	90	50	70	80	90	—	—	—	—
S13	31	42	50	55	—	—	—	—	50	60	65	70	41	55	65	70	—	—	—	—
H5	41	55	65	70	—	—	—	—	—	—	—	—	—	—	—	—	—	—	—	—
H8	43	55	70	75	—	—	—	—	—	—	—	—	—	—	—	—	—	—	—	—
H11	50	70	85	90	—	—	—	—	—	—	—	—	—	—	—	—	—	—	—	—
H12	80	105	125	135	—	—	—	—	—	—	—	—	—	—	—	—	—	—	—	—
H21	43	55	70	75	—	—	—	—	—	—	—	—	—	—	—	—	—	—	—	—

R217.29-05

Cutters with round inserts, max. axial cutting depth 5 mm

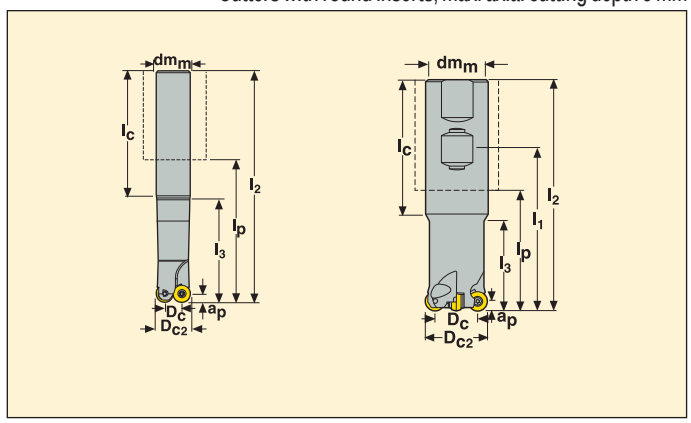

- For insert selection and cutting data recommendations, see page(s) 338-339
- For complete insert programme, see page(s) 614
- For helical interpolation, see page(s) 682-683

Part No.	Type of mounting	Dimensions in mm									α° max		KG		Insert
		a_p	D_{c2}	D_c	dm_m	l_1	l_2	l_3	l_p	l_c					
R217.29 -1620.0-05.2.100E	Cylindrical	5	20	10	16	–	160	112	112	140	90	2	0,5	27400	RD..10T3
-2520.3-05.2.070	Cyl.-Weldon	5	20	10	25	94	126	55	70	66	90	2	0,5	27400	RD..10T3
R217.29 -2025.0-05.2.120	Cylindrical	5	25	15	20	–	170	120	120	140	17,25	2	0,5	24400	RD..10T3
-2525.3-05.3.050	Cyl.-Weldon	5	25	15	25	74	106	40	50	66	17,25	3	0,4	24400	RD..10T3
R217.29 -3232.3-05.4.060	Cyl.-Weldon	5	32	22	32	84	120	50	60	70	10,02	4	0,7	21600	RD..10T3

Ramping angle = α°

Spare Parts

For cutter	Insert screw	Insert key
		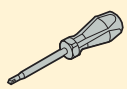
Dia.16-20	C03006-T09P	T09P-3
Dia. 25-40	C03007-T09P	T09P-3

Please check availability in current price and stock-list

Torque value 2,0 Nm, Torque keys, see page 690

R217/220.29-05

Cutters with round inserts, max. axial cutting depth 5 mm

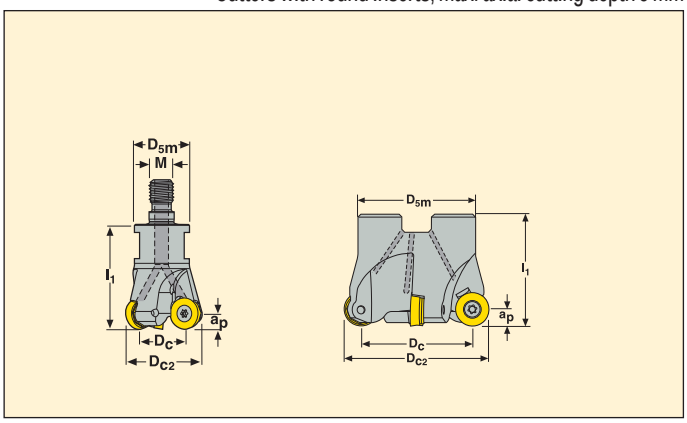

- For insert selection and cutting data recommendations, see page(s) 338-339
- For complete insert programme, see page(s) 614
- For helical interpolation, see page(s) 682-683

Part No.	Type of mounting	Dimensions in mm a_p	D_{c2}	D_c	D_{5m}	dm_m	l_1	M	α° max		KG		Insert
R217.29 -1020.RE-05.2A	Combimaster	5	20	10	18,5	–	28	M10	90	2	0,1	27400	RD..10T3
R217.29 -1225.RE-05.2A	Combimaster	5	25	15	23	–	30	M12	17,25	2	0,1	24400	RD..10T3
-1225.RE-05.3A	Combimaster	5	25	15	23	–	30	M12	17,25	3	0,1	24400	RD..10T3
R217.29 -1232.RE-05.4A	Combimaster	5	32	22	23	–	30	M12	10,02	4	0,1	21600	RD..10T3
-1632.RE-05.3A	Combimaster	5	32	22	30	–	40	M16	10,02	3	0,3	21600	RD..10T3
-1632.RE-05.4A	Combimaster	5	32	22	30	–	40	M16	10,02	4	0,2	21600	RD..10T3
-1635.RE-05.5A	Combimaster	5	35	25	30	–	40	M16	8,51	5	0,3	20700	RD..10T3
R217.29 -1640.RE-05.4A	Combimaster	5	40	30	30	–	40	M16	6,81	4	0,3	19300	RD..10T3
-1640.RE-05.5A	Combimaster	5	40	30	30	–	40	M16	6,81	5	0,3	19300	RD..10T3
-2040.RE-05.5A	Combimaster	5	40	30	36,5	–	40	M20	6,81	5	0,3	19300	RD..10T3
R220.29 -0040-05.3A	Arbor	5	40	30	35	16	40	–	6,81	3	0,3	19300	RD..10T3
-0040-05.5A	Arbor	5	40	30	35	16	40	–	6,81	5	0,2	19300	RD..10T3
R217.29 -2042.RE-05.5A	Combimaster	5	42	32	36,5	–	40	M20	6,31	5	0,4	18800	RD..10T3
-2042.RE-05.6A	Combimaster	5	42	32	36,5	–	40	M20	6,31	6	0,4	18800	RD..10T3
-1642.RE-05.5A	Combimaster	5	42	32	30	–	40	M16	6,31	5	0,3	18800	RD..10T3
R220.29 -0050-05.4A	Arbor	5	50	40	42	22	40	–	4,87	4	0,3	17300	RD..10T3
-0050-05.6A	Arbor	5	50	40	42	22	40	–	4,87	6	0,3	17300	RD..10T3

Ramping angle = α°

Spare Parts

For cutter	Insert screw	Insert key	Arbor screw
Dia.16-20	C03006-T09P	T09P-3	–
Dia. 25-40	C03007-T09P	T09P-3	–
R217.29-2040-2042-05	C03007-T09P	T09P-3	–
R220.29-0040	C03007-T09P	T09P-3	220.17-689
R220.29-0050	C03007-T09P	T09P-3	220.17-692

Please check availability in current price and stock-list

Torque value 2,0 Nm, Torque keys, see page 690

R217/220.29-05 – Insert selection

SMG		a_p	f_z			
			100%	30%	10%	5%
P1	RDHT10T3M0T-M05 T350M	2,0	0,16	0,17	0,26	0,36
P2	RDHT10T3M0T-M05 T350M	2,0	0,16	0,17	0,26	0,38
P3	RDHT10T3M0T-M05 T350M	2,0	0,15	0,17	0,26	0,36
P4	RDHT10T3M0T-M05 MS2500	2,0	0,15	0,16	0,24	0,34
P5	RDHT10T3M0T-M05 MS2500	2,0	0,15	0,16	0,24	0,34
P6	RDHT10T3M0T-M05 MS2500	2,0	0,14	0,16	0,24	0,34
P7	RDKW10T3M0T-MD06 MS2500	2,0	0,17	0,19	0,30	0,40
P8	RDKW10T3M0T-MD06 MP2500	2,0	0,18	0,20	0,30	0,42
P11	RDKW10T3M0T-MD06 MS2500	2,0	0,17	0,19	0,30	0,40
M1	RDHT10T3M0T-M05 T350M	2,0	0,16	0,17	0,26	0,38
M2	RDHT10T3M0T-M05 T350M	2,0	0,15	0,16	0,24	0,34
M3	RDHT10T3M0T-M05 T350M	1,6	0,13	0,14	0,22	0,30
M4	RDHT10T3M0T-M05 T350M	1,2	0,13	0,14	0,22	0,30
M5	RDHT10T3M0T-M05 T350M	1,2	0,13	0,14	0,22	0,30
K1	RDKW10T3M0T-MD06 MK2050	2,0	0,19	0,20	0,32	0,44
K2	RDKW10T3M0T-MD06 MK2050	2,0	0,17	0,19	0,30	0,40
K3	RDKW10T3M0T-MD06 MK2050	2,0	0,17	0,19	0,30	0,40
K4	RDKW10T3M0T-MD06 MK2050	2,0	0,17	0,19	0,30	0,40
K5	RDKW10T3M0T-MD06 MK2050	2,0	0,16	0,17	0,26	0,36
K6	RDKW10T3M0T-MD06 MP1500	2,0	0,17	0,19	0,30	0,40
K7	RDKW10T3M0T-MD06 MP1500	2,0	0,16	0,17	0,26	0,36
N1	RDHT10T3M0-E04 H25	2,0	0,16	0,18	0,28	0,38
N2	RDHT10T3M0-E04 H25	2,0	0,16	0,18	0,28	0,38
N3	RDHT10T3M0-E04 H25	2,0	0,16	0,18	0,28	0,38
N11	RDHT10T3M0-E04 H25	2,0	0,16	0,18	0,28	0,38
S1	RDHT10T3M0T-M07 MS2500	1,2	0,18	0,20	0,30	0,44
S2	RDHT10T3M0T-M07 MS2500	1,2	0,18	0,20	0,30	0,44
S3	RDHT10T3M0T-M05 MS2500	1,2	0,12	0,13	0,20	0,28
S11	RDHT10T3M0T-M05 MS2050	1,4	0,14	0,15	0,24	0,32
S12	RDHT10T3M0T-M05 MS2050	1,4	0,14	0,15	0,24	0,32
S13	RDHT10T3M0T-M05 MS2050	1,2	0,13	0,14	0,22	0,30
H5	RDHW10T3M0T-MD06 MH1000	1,6	0,13	0,14	0,22	0,30
H8	RDHW10T3M0T-MD06 MH1000	1,4	0,11	0,12	0,18	0,26
H11	RDHW10T3M0T-MD06 MH1000	1,6	0,13	0,14	0,22	0,30
H12	RDHT10T3M0T-M07 T350M	1,6	0,15	0,17	0,26	0,36
H21	RDHW10T3M0T-MD06 MH1000	1,4	0,11	0,12	0,18	0,26

SMG = Seco material group
f_z = mm/tooth
v_c= m/min
a_e/D_c = %
All cutting data are start values

R217/220.29-05 – Cutting data v_c = (m/min)

	MP1500				MP2500				T350M				F40M				MK2050			
SMG	100%	30%	10%	5%	100%	30%	10%	5%	100%	30%	10%	5%	100%	30%	10%	5%	100%	30%	10%	5%
P1	355	495	580	640	315	440	520	560	320	445	520	570	280	390	455	500	310	435	510	560
P2	350	475	570	620	310	420	500	550	315	430	510	560	270	370	445	485	305	415	495	540
P3	305	415	500	540	270	370	440	480	275	375	445	490	240	325	385	425	265	360	435	470
P4	265	370	440	475	235	330	390	420	240	335	390	430	210	290	340	375	235	325	385	415
P5	260	355	420	460	230	315	370	410	230	320	375	410	200	275	330	355	225	310	365	400
P6	290	395	470	520	255	350	415	460	260	360	425	460	230	310	370	400	255	345	410	450
P7	275	375	445	490	245	330	395	430	245	340	400	435	215	295	350	380	240	325	385	425
P8	255	350	420	455	225	310	370	400	230	315	375	410	200	275	325	355	220	305	365	395
P11	265	365	430	475	235	320	380	420	240	330	390	420	210	285	340	365	230	320	375	415
M1	—	—	—	—	220	305	365	395	240	330	395	430	220	300	360	390	—	—	—	—
M2	—	—	—	—	185	250	300	330	200	275	325	355	180	250	295	320	—	—	—	—
M3	—	—	—	—	145	200	235	260	160	215	255	285	145	195	235	255	—	—	—	—
M4	—	—	—	—	115	155	185	200	125	165	195	215	110	150	180	195	—	—	—	—
M5	—	—	—	—	95	130	155	165	100	140	165	180	95	125	150	165	—	—	—	—
K1	275	380	450	490	245	335	400	435	—	—	—	—	215	295	350	385	325	450	540	580
K2	245	335	400	435	215	295	350	385	—	—	—	—	190	265	310	340	290	400	475	520
K3	210	285	335	370	185	250	300	330	—	—	—	—	160	220	265	285	245	335	400	440
K4	200	270	320	355	175	240	285	315	—	—	—	—	155	210	250	275	235	320	380	420
K5	120	165	195	215	105	145	175	190	—	—	—	—	95	130	150	170	140	195	230	255
K6	175	240	285	310	155	210	250	275	—	—	—	—	135	185	220	240	205	285	335	370
K7	155	210	250	275	135	190	220	240	—	—	—	—	120	165	195	215	180	250	295	325
N1	—	—	—	—	—	—	—	—	—	—	—	—	810	1100	1325	1450	—	—	—	—
N2	—	—	—	—	—	—	—	—	—	—	—	—	650	900	1050	1175	—	—	—	—
N3	—	—	—	—	—	—	—	—	—	—	—	—	435	600	710	780	—	—	—	—
N11	—	—	—	—	—	—	—	—	—	—	—	—	495	680	810	890	—	—	—	—
S1	—	—	—	—	—	—	—	—	55	75	90	100	50	70	85	90	—	—	—	—
S2	—	—	—	—	—	—	—	—	46	60	75	80	42	55	65	75	—	—	—	—
S3	—	—	—	—	—	—	—	—	40	55	65	70	37	49	60	65	—	—	—	—
S11	—	—	—	—	—	—	—	—	80	110	130	145	75	100	120	130	—	—	—	—
S12	—	—	—	—	—	—	—	—	46	65	75	80	42	55	70	75	—	—	—	—
S13	—	—	—	—	—	—	—	—	37	50	60	65	34	45	55	60	—	—	—	—
H5	55	75	90	100	—	—	—	—	50	70	80	90	44	60	70	80	—	—	—	—
H8	60	80	95	105	—	—	—	—	55	70	85	95	46	60	75	80	—	—	—	—
H11	70	100	115	130	—	—	—	—	65	90	105	115	55	75	90	100	—	—	—	—
H12	110	150	175	195	—	—	—	—	95	130	155	170	85	115	135	150	—	—	—	—
H21	60	80	95	105	—	—	—	—	55	70	85	95	46	60	75	80	—	—	—	—

R217/220.29-05 – Cutting data v_c = (m/min)

	MM4500				MS2050				MS2500				MH1000				H25			
SMG	100%	30%	10%	5%	100%	30%	10%	5%	100%	30%	10%	5%	100%	30%	10%	5%	100%	30%	10%	5%
P1	205	285	340	375	—	—	—	—	410	570	670	730	—	—	—	—	—	—	—	—
P2	200	275	330	360	—	—	—	—	400	550	650	710	—	—	—	—	—	—	—	—
P3	175	245	290	310	—	—	—	—	350	475	570	620	—	—	—	—	—	—	—	—
P4	155	215	255	280	—	—	—	—	310	425	500	550	—	—	—	—	—	—	—	—
P5	150	205	240	265	—	—	—	—	295	405	480	520	—	—	—	—	—	—	—	—
P6	165	230	270	300	—	—	—	—	335	455	540	590	—	—	—	—	—	—	—	—
P7	160	215	255	280	—	—	—	—	315	430	510	550	—	—	—	—	—	—	—	—
P8	145	205	240	260	—	—	—	—	295	400	475	520	—	—	—	—	—	—	—	—
P11	155	210	250	275	—	—	—	—	305	420	495	540	—	—	—	—	—	—	—	—
M1	175	235	285	310	220	240	230	245	285	390	465	510	—	—	—	—	—	—	—	—
M2	145	195	230	255	170	175	170	185	235	325	385	420	—	—	—	—	—	—	—	—
M3	115	155	185	205	110	110	105	105	190	255	305	335	—	—	—	—	—	—	—	—
M4	90	120	145	160	75	75	65	70	145	195	235	255	—	—	—	—	—	—	—	—
M5	75	100	120	130	60	60	55	60	120	165	195	215	—	—	—	—	—	—	—	—
K1	—	—	—	—	—	—	—	—	—	—	—	—	275	375	445	485	—	—	—	—
K2	—	—	—	—	—	—	—	—	—	—	—	—	245	335	395	435	—	—	—	—
K3	—	—	—	—	—	—	—	—	—	—	—	—	205	280	335	365	—	—	—	—
K4	—	—	—	—	—	—	—	—	—	—	—	—	195	270	320	350	—	—	—	—
K5	—	—	—	—	—	—	—	—	—	—	—	—	120	165	195	210	—	—	—	—
K6	—	—	—	—	—	—	—	—	—	—	—	—	175	235	280	310	—	—	—	—
K7	—	—	—	—	—	—	—	—	—	—	—	—	150	210	250	270	—	—	—	—
N1	—	—	—	—	—	—	—	—	—	—	—	—	—	—	—	—	850	1150	1375	1525
N2	—	—	—	—	—	—	—	—	—	—	—	—	—	—	—	—	690	940	1125	1225
N3	—	—	—	—	—	—	—	—	—	—	—	—	—	—	—	—	455	620	750	820
N11	—	—	—	—	—	—	—	—	—	—	—	—	—	—	—	—	520	710	850	930
S1	27	37	44	48	65	80	90	95	70	95	115	125	—	—	—	—	—	—	—	—
S2	22	30	35	39	50	65	70	75	55	75	90	100	—	—	—	—	—	—	—	—
S3	19	26	31	34	45	55	60	65	50	70	80	90	—	—	—	—	—	—	—	—
S11	38	50	60	70	90	110	125	135	100	135	160	180	—	—	—	—	—	—	—	—
S12	29	40	48	50	70	85	95	105	60	80	95	100	—	—	—	—	—	—	—	—
S13	23	32	38	42	55	70	75	80	46	60	75	80	—	—	—	—	—	—	—	—
H5	—	—	—	—	—	—	—	—	—	—	—	—	55	75	90	100	—	—	—	—
H8	—	—	—	—	—	—	—	—	—	—	—	—	60	80	95	105	—	—	—	—
H11	—	—	—	—	—	—	—	—	—	—	—	—	70	100	115	125	—	—	—	—
H12	—	—	—	—	—	—	—	—	—	—	—	—	110	145	175	190	—	—	—	—
H21	—	—	—	—	—	—	—	—	—	—	—	—	60	80	95	105	—	—	—	—

R217.29I-06

Cutters with round inserts, max. axial cutting depth 6 mm

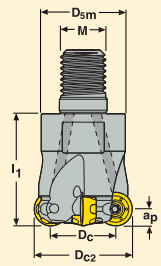

- For insert selection and cutting data recommendations, see page(s) 345-347
- For complete insert programme, see page(s) 615
- For helical interpolation, see page(s) 682-683

Part No.	Type of mounting	Dimensions in mm						a (°)*		KG		Insert
		a_p	D_{c2}	D_c	D_{5m}	l_1	M					
R217.29I -1225.RE-06.2A	Combimaster	6	25	13	23	35	M12	13	2	1,0	17700	RP..1204
R217.29I -1232.RE-06.3A	Combimaster	6	32	20	23	40	M16	7	3	0,2	15600	RP..1204
-1632.RE-06.3A	Combimaster	6	32	20	30	40	M16	7	3	0,2	15600	RP..1204
R217.29I -1635.RE-06.3A	Combimaster	6	35	23	30	40	M16	10	3	0,2	15000	RP..1204
-1635.RE-06.4A	Combimaster	6	35	23	30	40	M16	6	4	0,2	15000	RP..1204
R217.29I -1640.RE-06.3A	Combimaster	6	40	28	30	40	M16	8	3	0,2	14000	RP..1204
-1640.RE-06.4A	Combimaster	6	40	28	30	40	M16	8	4	0,2	14000	RP..1204
R217.29I -2040.RE06.4A	Combimaster	6	40	28	36,5	45	M20	8	4	0,4	14000	RP..1204
R217.29I -1642.RE-06.5A	Combimaster	6	42	30	30	40	M16	4	5	0,3	13600	RP..1204
R217.29I -2042.RE-06.5A	Combimaster	6	42	30	36,5	45	M20	4,2	5	0,4	13600	RP..1204

Ramping angle = α°

For Combimaster shanks and dimensions, see pages 588-598

Spare Parts

For cutter	Screw	Key	Insert screw	Insert key
				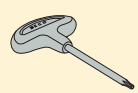
R217.29I-25/35-4A/42	SX2035-T05P	T05P-2	C03508-T15P	T15P-4
R217.29I-32/35-3A/40	SX2035-T05P	T05P-2	C03509-T15P	T15P-4

Please check availability in current price and stock-list

Torque value 3,0 Nm, Torque keys, see page 690

R217.29I-06

Cutters with round inserts, max. axial cutting depth 6 mm

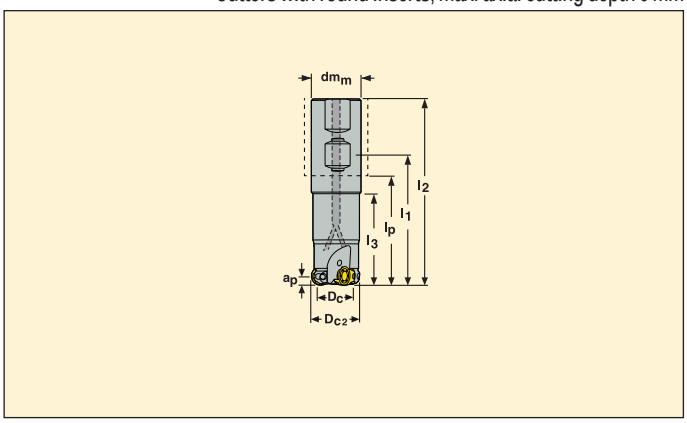

- For insert selection and cutting data recommendations, see page(s) 345-347
- For complete insert programme, see page(s) 615
- For helical interpolation, see page(s) 682-683

Part No.	Type of mounting	Dimensions in mm									a (°)*		KG		Insert
		a_p	D_{c2}	D_c	dm_m	l_1	l_2	l_3	l_p	l_c					
R217.29I -2525.3-06.2.050A	Cyl.-Weldon	6	25	13	25	74	106	21,6	50,5	46	13	2	0,4	17700	RP..1204
R217.29I -3232.3-06.3.060A	Cyl.-Weldon	6	32	20	32	84	120	26,6	60,5	60	7	3	0,7	15600	RP..1204
R217.29I -3240.3-06-055.4A	Cyl.-Weldon	6	40	28	32	79	115	55	55	60	8	4	0,6	14000	RP..1204
R217.29I -3240.3-06.4.075A	Cyl.-Weldon	6	40	28	32	99	135	72	75,5	60	8	4	0,8	14000	RP..1204

Ramping angle = α°

Centre coolant hole possibility by removning centre screw

Spare Parts

For cutter	Screw	Key	Insert screw	Insert key	Centre screw
R217.29I-.. ø 25	SX2035-T05P	T05P-2	C03508-T15P	T15P-4	–
R217.29I-.. ø 32-40	SX2035-T05P	T05P-2	C03509-T15P	T15P-4	–
R217.29I-..ø 32-40-4A	SX2035-T05P	T05P-2	C03509-T15P	T15P-4	SH3040

Please check availability in current price and stock-list

Torque value 3,0 Nm, Torque keys, see page 690

R220.29I-06

Cutters with round inserts, max. axial cutting depth 6 mm

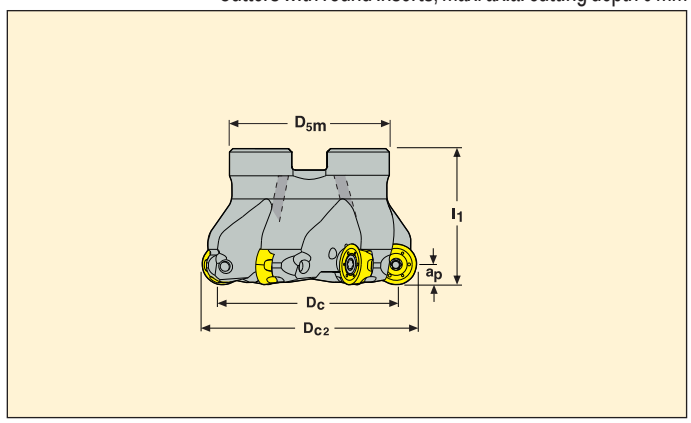

- For insert selection and cutting data recommendations, see page(s) 345-347
- For complete insert programme, see page(s) 615
- For helical interpolation, see page(s) 682-683

Part No.	Type of mounting	Dimensions in mm						a (°)*		KG		Insert
		a_p	D_{c2}	D_c	D_{5m}	dm_m	l_1					
R220.29I -0040-06.4A	Arbor	6	40	28	35	16	40	8	4	0,2	14000	RP..1204
R220.29I -0044-06.4A	Arbor	6	44	32	35	16	40	7,9	4	0,2	13300	RP..1204
R220.29I -0050-06.4A	Arbor	6	50	38	42	22	40	5,5	4	0,3	12500	RP..1204
-0050-06.5A	Arbor	6	50	38	42	22	40	5,5	5	0,3	12500	RP..1204
R220.29I -0052-06.4A	Arbor	6	52	40	42	22	40	5	4	0,3	12300	RP..1204
-0052-06.5A	Arbor	6	52	40	42	22	40	5	5	0,3	12300	RP..1204
R220.29I -0063-06.5A	Arbor	6	63	51	47	22	40	4	5	0,4	11200	RP..1204
-0063-06.6A	Arbor	6	63	51	47	22	40	4	6	0,5	11200	RP..1204
-0063-06.7A	Arbor	6	63	51	47	22	40	3	7	0,5	11200	RP..1204

Ramping angle = α°.

Spare Parts

For cutter	Screw	Key	Insert screw	Insert key	Arbor screw
R220.29I-..ø 40	SX2035-T05P	T05P-2	C03509-T15P	T15P-4	220.17-689
R220.29I-..ø 44	SX2035-T05P	T05P-2	C03509-T15P	T15P-4	220.17-689
R220.29I-..ø 50-63	SX2035-T05P	T05P-2	C03509-T15P	T15P-4	220.17-692

Please check availability in current price and stock-list

Torque value 3,0 Nm, Torque keys, see page 690

R220.29I-06

Cutters with round inserts, max. axial cutting depth 6 mm

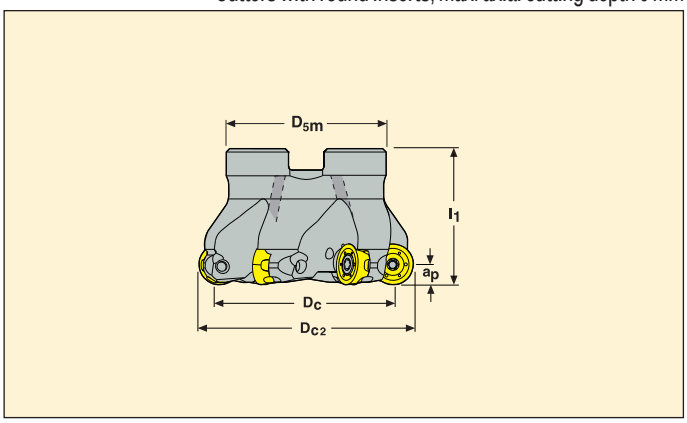

- For insert selection and cutting data recommendations, see page(s) 345-347
- For complete insert programme, see page(s) 615
- For helical interpolation, see page(s) 682-683

Part No.	Type of mounting	Dimensions in mm						a (°)*		KG		Insert
		a_p	D_{c2}	D_c	D_{5m}	dm_m	l_1					
R220.29I -0066-06.6A	Arbor	6	66	54	50	27	50	3,5	6	0,6	10900	RP..1204
R220.29I -0080-06.6A	Arbor	6	80	68	62	27	50	3	6	1,0	10000	RP..1204
-0080-06.7A	Arbor	6	80	68	62	27	50	3	7	1,0	10000	RP..1204
-0080-06.8A	Arbor	6	80	68	62	27	50	2	8	1,0	10000	RP..1204
R220.29I -0092-06.7A	Arbor	6	92	80	77	32	50	2,5	7	1,4	9200	RP..1204
R220.29I -0100-06.9A	Arbor	6	100	88	77	32	50	2	9	1,6	8800	RP..1204
R220.29I -0112-06.7A	Arbor	6	112	100	77	32	63	1,5	7	1,8	8400	RP..1204
R220.29I -0125-06.11A	Arbor	6	125	113	90	40	63	1,5	11	3,1	8000	RP..1204
R220.29I -0137-06.8A	Arbor	6	137	125	90	40	63	1,5	8	3,3	7600	RP..1204

Ramping angle = α°.

Spare Parts

For cutter	Screw	Key	Insert screw	Insert key	Arbor screw
R220.29I-..ø 66-80	SX2035-T05P	T05P-2	C03509-T15P	T15P-4	MC6S12X35
R220.29I-..ø 92-112	SX2035-T05P	T05P-2	C03509-T15P	T15P-4	950E1645
R220.29I-..ø 125-137	SX2035-T05P	T05P-2	C03509-T15P	T15P-4	MC6S20X50

Please check availability in current price and stock-list

Torque value 3,0 Nm, Torque keys, see page 690

R217/220.29B-06 – For blade machining

Cutters with round inserts, max. axial cutting depth 6 mm

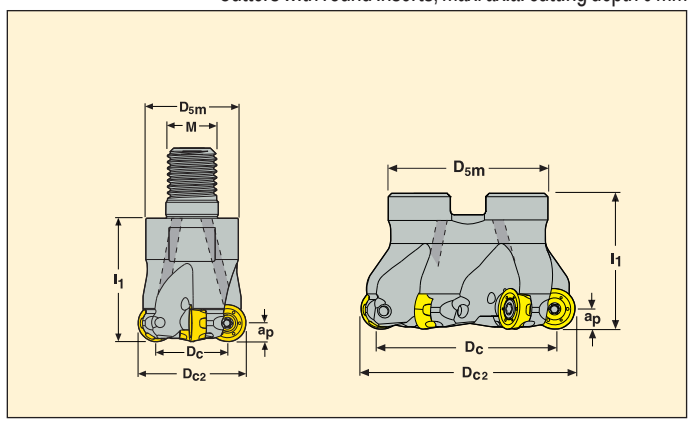

- For insert selection and cutting data recommendations, see page(s) 345-347
- For complete insert programme, see page(s) 615
- For helical interpolation, see page(s) 682-683

Part No.	Type of mounting	Dimensions in mm							α° max		KG		Insert
		a_p	D_{c2}	D_c	D_{5m}	dm_m	l_1	M					
R217.29B -1632.RE-06.3A	Combimaster	6	32	20	30	–	40	M16	4,5	3	0,2	15600	RP..12
R220.29B -0040-06.4A	Arbor	6	40	28	35	16	40	–	5	4	0,2	14000	RP..12
-0050-06.5A	Arbor	6	50	38	42	22	40	–	5	5	0,3	12500	RP..12
-0052-06.5A	Arbor	6	52	38	42	22	40	–	5	5	0,3	12300	RP..12

Ramping angle = α°.

For Combimaster shanks and dimensions, see pages 588-598

Spare Parts

For cutter	Screw	Key	Insert screw	Insert key	Arbor screw
R217.29-..	SX2035-T05P	T05P-2	C03509-T15P	T15P-4	–
R220.29-0040	SX2035-T05P	T05P-2	C03509-T15P	T15P-4	220.17-689
R220.29-0050-0052	SX2035-T05P	T05P-2	C03509-T15P	T15P-4	220.17-692

Please check availability in current price and stock-list

Torque value 3,0 Nm, Torque keys, see page 690

R217/220.29-06 – Insert selection

SMG		a_p	f_z 100%	30%	10%	5%
P1	RPHT1204M0T-6-M08 T350M	2,5	0,24	0,26	0,42	0,60
P2	RPHT1204M0T-6-M08 T350M	2,5	0,26	0,28	0,42	0,60
P3	RPHT1204M0T-6-M08 T350M	2,5	0,24	0,26	0,40	0,55
P4	RPHT1204M0T-6-M08 T350M	2,5	0,24	0,26	0,40	0,55
P5	RPKT1204M0T-6-M15 MP2500	2,5	0,42	0,46	0,75	1,0
P6	RPKT1204M0T-6-M15 MP2500	2,5	0,42	0,46	0,70	1,0
P7	RPKT1204M0T-6-M15 MP2500	2,5	0,42	0,46	0,70	1,0
P8	RPKT1204M0T-6-M15 MP2500	2,5	0,44	0,48	0,75	1,1
P11	RPHT1204M0T-6-M08 MP2500	2,5	0,22	0,24	0,38	0,55
M1	RPHT1204M0T-6-ME07 T350M	2,5	0,22	0,24	0,36	0,50
M2	RPHT1204M0T-6-ME07 T350M	2,5	0,20	0,22	0,34	0,46
M3	RPHT1204M0T-6-ME07 T350M	1,9	0,18	0,20	0,30	0,42
M4	RPHT1204M0T-6-M08 T350M	1,5	0,20	0,22	0,34	0,48
M5	RPHT1204M0T-6-M08 T350M	1,5	0,20	0,22	0,34	0,48
K1	RPKT1204M0T-6-M15 MK2050	2,5	0,46	0,50	0,80	1,1
K2	RPKT1204M0T-6-M15 MK2050	2,5	0,42	0,46	0,75	1,0
K3	RPKT1204M0T-6-M15 MK2050	2,5	0,42	0,46	0,75	1,0
K4	RPKT1204M0T-6-M15 MK2050	2,5	0,42	0,46	0,75	1,0
K5	RPKT1204M0T-6-M15 MK2050	2,5	0,38	0,42	0,65	0,90
K6	RPKT1204M0T-6-M15 MK2050	2,5	0,42	0,46	0,75	1,0
K7	RPKT1204M0T-6-M15 MK2050	2,5	0,38	0,42	0,65	0,90
N1	RPHT1204M0-6-E05 H25	2,5	0,20	0,22	0,34	0,46
N2	RPHT1204M0-6-E05 H25	2,5	0,20	0,22	0,34	0,46
N3	RPHT1204M0-6-E05 H25	2,5	0,20	0,22	0,34	0,46
N11	RPHT1204M0-6-E05 H25	2,5	0,20	0,22	0,34	0,46
S1	RPHT1204M0T-6-M13 MS2500	1,5	0,34	0,36	0,55	0,80
S2	RPHT1204M0T-6-M13 MS2500	1,5	0,34	0,36	0,55	0,80
S3	RPHT1204M0T-6-M13 MS2500	1,5	0,32	0,34	0,55	0,75
S11	RPHT1204M0T-6-M13 MS2050	1,7	0,36	0,40	0,60	0,85
S12	RPHT1204M0T-6-M13 MS2050	1,7	0,36	0,40	0,60	0,85
S13	RPHT1204M0T-6-M13 MS2050	1,5	0,34	0,36	0,55	0,80
H5	RPHW1204M0T-6-MD12 MH1000	1,9	0,26	0,30	0,46	0,65
H8	RPHW1204M0T-6-MD12 MH1000	1,7	0,22	0,24	0,36	0,50
H11	RPHW1204M0T-6-MD12 MH1000	1,9	0,26	0,30	0,46	0,65
H12	RPHT1204M0T-6-M13 T350M	1,9	0,28	0,32	0,48	0,70
H21	RPHW1204M0T-6-MD12 MH1000	1,7	0,22	0,24	0,36	0,50

SMG = Seco material group
f_z = mm/tooth
v_c= m/min
a_e/D_c = %
All cutting data are start values

R217/220.29-06 – Cutting data v_c = (m/min)

	MP1500				MP2500				MP3000				T350M				F40M			
SMG	100%	30%	10%	5%	100%	30%	10%	5%	100%	30%	10%	5%	100%	30%	10%	5%	100%	30%	10%	5%
P1	310	435	520	560	335	465	550	600	315	440	520	570	290	405	480	520	255	355	420	455
P2	300	425	495	540	320	455	530	580	305	420	500	550	275	395	460	510	240	345	400	440
P3	260	370	435	475	280	390	460	510	265	370	435	475	245	340	405	440	210	295	350	385
P4	230	325	385	425	245	345	415	445	235	330	385	425	215	300	360	390	185	260	315	340
P5	225	315	375	410	240	335	395	430	225	315	370	405	210	290	345	375	180	255	300	325
P6	250	355	425	460	270	375	445	485	255	350	415	455	235	330	385	420	205	285	335	365
P7	235	335	400	430	255	355	420	455	240	330	390	430	220	310	365	400	195	270	315	345
P8	220	310	370	400	235	330	390	425	225	310	365	400	205	285	340	370	180	250	295	325
P11	230	325	390	420	245	345	405	445	235	325	380	415	215	300	355	385	185	260	310	335
M1	—	—	—	—	230	325	380	420	230	315	375	410	215	305	355	390	195	275	325	355
M2	—	—	—	—	195	270	315	345	190	260	310	340	180	250	295	325	165	230	270	295
M3	—	—	—	—	155	215	255	280	150	210	245	270	145	200	235	260	130	180	215	235
M4	—	—	—	—	120	165	195	215	115	160	190	205	110	150	180	200	100	140	165	180
M5	—	—	—	—	100	135	160	180	95	130	155	170	95	125	150	165	85	115	135	150
K1	240	335	395	430	250	360	420	460	240	335	400	435	—	—	—	—	190	270	320	350
K2	210	300	360	385	230	320	375	410	215	300	350	385	—	—	—	—	175	240	285	310
K3	180	255	305	330	195	270	315	345	180	250	295	325	—	—	—	—	145	205	240	260
K4	170	240	290	315	185	255	305	330	175	240	280	310	—	—	—	—	140	195	230	250
K5	105	150	175	195	110	155	185	200	105	145	170	185	—	—	—	—	85	120	140	155
K6	150	215	255	275	160	225	265	290	155	210	250	275	—	—	—	—	125	170	200	220
K7	135	190	225	245	145	200	235	260	135	185	220	240	—	—	—	—	110	150	175	195
N1	—	—	—	—	—	—	—	—	—	—	—	—	—	—	—	—	710	1000	1200	1300
N2	—	—	—	—	—	—	—	—	—	—	—	—	—	—	—	—	570	810	960	1050
N3	—	—	—	—	—	—	—	—	—	—	—	—	—	—	—	—	385	540	640	700
N11	—	—	—	—	—	—	—	—	—	—	—	—	—	—	—	—	440	610	730	800
S1	—	—	—	—	—	—	—	—	55	75	90	95	50	70	85	95	48	65	75	85
S2	—	—	—	—	—	—	—	—	44	60	70	80	42	55	70	75	38	50	60	70
S3	—	—	—	—	—	—	—	—	38	50	60	65	37	50	60	65	33	46	55	60
S11	—	—	—	—	—	—	—	—	75	105	125	135	75	100	120	130	65	90	110	120
S12	—	—	—	—	—	—	—	—	44	60	70	80	42	60	70	75	38	55	65	70
S13	—	—	—	—	—	—	—	—	35	48	55	60	34	46	55	60	31	42	50	55
H5	50	70	85	90	48	65	80	85	46	65	75	80	46	65	75	85	40	55	65	70
H8	55	75	90	100	50	70	85	90	49	65	80	85	49	65	80	85	43	60	70	75
H11	65	90	105	115	60	85	100	110	60	80	95	105	60	80	95	105	50	70	85	90
H12	95	135	160	175	90	130	150	165	90	120	145	155	90	120	145	160	75	105	125	140
H21	55	75	90	100	50	70	85	90	49	65	80	85	49	65	80	85	43	60	70	75

R217/220.29-06 – Cutting data v_c = (m/min)

	MK2050				MS2050				MS2500				H25			
SMG	100%	30%	10%	5%	100%	30%	10%	5%	100%	30%	10%	5%	100%	30%	10%	5%
P1	270	380	455	490	—	—	—	—	365	510	600	650	—	—	—	—
P2	260	370	435	475	—	—	—	—	345	495	580	640	—	—	—	—
P3	230	320	380	415	—	—	—	—	305	425	500	550	—	—	—	—
P4	200	285	335	375	—	—	—	—	270	375	450	485	—	—	—	—
P5	195	275	330	355	—	—	—	—	260	365	430	470	—	—	—	—
P6	220	310	370	400	—	—	—	—	295	410	485	530	—	—	—	—
P7	205	290	350	375	—	—	—	—	280	385	455	500	—	—	—	—
P8	190	270	320	350	—	—	—	—	255	360	425	465	—	—	—	—
P11	200	285	340	365	—	—	—	—	270	375	445	485	—	—	—	—
M1	—	—	—	—	220	295	330	355	250	355	415	455	—	—	—	—
M2	—	—	—	—	185	240	270	285	210	290	345	375	—	—	—	—
M3	—	—	—	—	150	185	200	210	170	230	275	300	—	—	—	—
M4	—	—	—	—	115	135	145	150	130	175	210	230	—	—	—	—
M5	—	—	—	—	95	110	120	125	110	145	175	195	—	—	—	—
K1	285	400	465	510	—	—	—	—	—	—	—	—	—	—	—	—
K2	250	355	425	460	—	—	—	—	—	—	—	—	—	—	—	—
K3	215	300	360	390	—	—	—	—	—	—	—	—	—	—	—	—
K4	205	285	345	370	—	—	—	—	—	—	—	—	—	—	—	—
K5	125	175	210	230	—	—	—	—	—	—	—	—	—	—	—	—
K6	180	255	305	325	—	—	—	—	—	—	—	—	—	—	—	—
K7	160	225	270	295	—	—	—	—	—	—	—	—	—	—	—	—
N1	—	—	—	—	—	—	—	—	—	—	—	—	790	1100	1300	1425
N2	—	—	—	—	—	—	—	—	—	—	—	—	640	890	1050	1150
N3	—	—	—	—	—	—	—	—	—	—	—	—	425	590	700	770
N11	—	—	—	—	—	—	—	—	—	—	—	—	485	680	800	880
S1	—	—	—	—	38	55	65	70	65	85	105	115	—	—	—	—
S2	—	—	—	—	31	44	55	55	50	70	85	90	—	—	—	—
S3	—	—	—	—	28	39	47	50	45	60	75	80	—	—	—	—
S11	—	—	—	—	50	75	85	95	90	125	145	160	—	—	—	—
S12	—	—	—	—	38	55	65	75	50	70	85	90	—	—	—	—
S13	—	—	—	—	33	47	55	60	41	55	65	75	—	—	—	—
H5	—	—	—	—	—	—	—	—	—	—	—	—	—	—	—	—
H8	—	—	—	—	—	—	—	—	—	—	—	—	—	—	—	—
H11	—	—	—	—	—	—	—	—	—	—	—	—	—	—	—	—
H12	—	—	—	—	—	—	—	—	—	—	—	—	—	—	—	—
H21	—	—	—	—	—	—	—	—	—	—	—	—	—	—	—	—

R217/220.29-08

Cutters with round inserts, max. axial cutting depth 8 mm

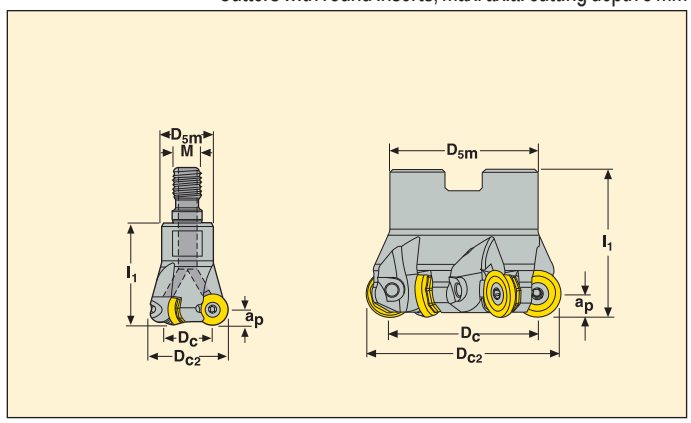

- For insert selection and cutting data recommendations, see page(s) 349-350
- For complete insert programme, see page(s) 615
- For helical interpolation, see page(s) 682-683

Part No.	Type of mounting	Dimensions in mm							α° max		KG		Insert
		a_p	D_{c2}	D_c	D_{5m}	dm_m	l_1	M					
R217.29 -1632.RE-08.2A	Combimaster	8	32	16	30	–	40	M16	90	2	0,2	12200	RP..1605
R217.29 -1640.RE-08.3A	Combimaster	8	40	24	30	–	40	M16	20	3	0,3	10900	RP..1605
-2040.RE08.3A	Combimaster	8	40	24	36,5	–	45	M20	20	3	0,3	10900	RP..1605
R220.29 -0050-08.3A	Arbor	8	50	34	42	22	50	–	15,5	3	0,4	9700	RP..1605
-0052-08.4A	Arbor	8	52	36	42	22	50	–	13	4	0,2	9600	RP..1605
R220.29 -0063-08.4A	Arbor	8	63	47	47	22	50	–	9,5	4	0,6	8700	RP..1605
-0063-08.5A	Arbor	8	63	47	47	22	50	–	9,5	5	0,6	8700	RP..1605
-0066-08.5A	Arbor	8	66	50	50	27	50	–	8,5	5	0,6	8400	RP..1605
-0066-08.6A	Arbor	8	66	50	50	27	50	–	3,23	6	0,6	8400	RP..1605
R220.29 -0080-08.5A	Arbor	8	80	64	62	27	50	–	6	5	1,0	7700	RP..1605
-0080-08.6A	Arbor	8	80	64	62	27	50	–	6	6	0,9	7700	RP..1605
R220.29 -0100-08.6MA	Arbor	8	100	84	77	32	50	–	5	6	1,4	6800	RP..1605
-0100-08.7A	Arbor	8	100	84	77	32	50	–	5	7	1,4	6800	RP..1605
R220.29 -0125-08.6MA	Arbor	8	125	109	90	40	63	–	3,5	6	2,8	6100	RP..1605
-0125-08.8A	Arbor	8	125	109	90	40	63	–	3,5	8	3,1	6100	RP..1605
R220.29 -8160-08.7M	Arbor	8	160	144	90	40	63	–	–	7	4,3	5400	RP..1605
-8160-08.9	Arbor	8	160	144	90	40	63	–	–	9	4,1	5400	RP..1605

Ramping angle = α°.

For Combimaster shanks and dimensions, see pages 588-598

Spare Parts

For cutter	Shim screw	Key	Insert shim	Insert screw	Insert key	Arbor screw
R217.29-08-2A	–	–	–	C05010-T20P	T20P-4	–
R217.29-1640-3A	–	–	–	C05013-T20P	T20P-4	–
R217.29-2040-08	–	–	–	C05013-T20P	T20P-3	–
R220.29-0050-0052	–	–	–	C05013-T20P	T20P-4	–
R220.29-0063	–	–	–	C05013-T20P	T20P-4	220.17-692
R220.29-0066-0088	–	–	–	C05013-T20P	T20P-4	MC6S12X35
R22029-0100-8160-M	CA5010	H05-4	SRP1604M0	C05018-T20P	T20P-4	–
R22029-0100-8160	–	–	–	C05013-T20P	T20P-4	–

Please check availability in current price and stock-list

Torque value 5,0 Nm, Torque keys, see page 690

R217/220.29-08 – Insert selection

SMG		a_p	f_z			
			100%	30%	10%	5%
P1	RPHT1605M0T-ME11 T350M	3,0	0,36	0,38	0,60	0,85
P2	RPHT1605M0T-ME11 T350M	3,0	0,36	0,40	0,60	0,85
P3	RPHT1605M0T-ME11 T350M	3,0	0,34	0,38	0,60	0,80
P4	RPHT1605M0T-M18 MS2500	3,0	0,46	0,50	0,80	1,1
P5	RPHT1605M0T-M18 MS2500	3,0	0,46	0,50	0,75	1,1
P6	RPHT1605M0T-M18 MS2500	3,0	0,44	0,48	0,75	1,1
P7	RPHT1605M0T-M18 MS2500	3,0	0,44	0,48	0,75	1,1
P8	RPHT1605M0T-M18 MP2500	3,0	0,46	0,50	0,80	1,1
P11	RPHT1605M0T-M18 MS2500	3,0	0,44	0,48	0,75	1,1
M1	RPHT1605M0T-M12 T350M	3,0	0,40	0,44	0,65	0,95
M2	RPHT1605M0T-M12 T350M	3,0	0,36	0,40	0,60	0,85
M3	RPHT1605M0T-M12 T350M	2,5	0,32	0,34	0,55	0,75
M4	RPHT1605M0T-M12 T350M	1,9	0,32	0,34	0,55	0,75
M5	RPHT1605M0T-M12 T350M	1,9	0,32	0,34	0,55	0,75
K1	RPHT1605M0T-M18 MK2050	3,0	0,50	0,55	0,85	1,2
K2	RPHT1605M0T-M18 MK2050	3,0	0,46	0,50	0,75	1,1
K3	RPHT1605M0T-M18 MK2050	3,0	0,46	0,50	0,75	1,1
K4	RPHT1605M0T-M18 MK2050	3,0	0,46	0,50	0,75	1,1
K5	RPHT1605M0T-M18 MK2050	3,0	0,40	0,44	0,70	1,0
K6	RPHT1605M0T-M18 MK2050	3,0	0,46	0,50	0,75	1,1
K7	RPHT1605M0T-M18 MK2050	3,0	0,40	0,44	0,70	1,0
N1	RPHT1605M0T-ME11 F40M	3,0	0,46	0,50	0,80	1,1
N2	RPHT1605M0T-ME11 F40M	3,0	0,46	0,50	0,80	1,1
N3	RPHT1605M0T-ME11 F40M	3,0	0,46	0,50	0,80	1,1
N11	RPHT1605M0T-ME11 F40M	3,0	0,46	0,50	0,80	1,1
S1	RPHT1605M0T-M12 MS2500	1,9	0,32	0,34	0,55	0,75
S2	RPHT1605M0T-M12 MS2500	1,9	0,32	0,34	0,55	0,75
S3	RPHT1605M0T-M12 MS2500	1,9	0,30	0,32	0,50	0,70
S11	RPHT1605M0T-M12 MS2050	2,5	0,32	0,34	0,55	0,75
S12	RPHT1605M0T-M12 MS2050	2,5	0,32	0,34	0,55	0,75
S13	RPHT1605M0T-M12 MS2050	1,9	0,32	0,34	0,55	0,75
H5	RPKW1605M0T-MD20 F15M	2,5	0,44	0,48	0,75	1,1
H8	RPKW1605M0T-MD20 F15M	2,5	0,34	0,38	0,60	0,80
H11	RPKW1605M0T-MD20 F15M	2,5	0,44	0,48	0,75	1,1
H12	RPHT1605M0T-M12 T350M	2,5	0,26	0,30	0,46	0,65
H21	RPKW1605M0T-MD20 F15M	2,5	0,34	0,38	0,60	0,80

SMG = Seco material group
f_z = mm/tooth
v_c= m/min
a_e/D_c = %
All cutting data are start values

R217/220.29-08 – Cutting data v_c = (m/min)

	MP1500				MP2500				T350M				F40M			
SMG	100%	30%	10%	5%	100%	30%	10%	5%	100%	30%	10%	5%	100%	30%	10%	5%
P1	310	440	520	570	275	390	460	510	275	385	460	500	240	335	400	435
P2	300	430	510	560	265	380	450	490	265	375	445	490	230	325	385	425
P3	265	375	445	485	235	330	395	430	235	330	390	420	205	285	340	365
P4	235	330	395	430	205	290	350	380	205	290	345	380	180	250	300	330
P5	225	320	375	410	195	280	330	360	195	275	330	360	170	240	285	315
P6	255	360	420	465	225	315	375	415	225	315	375	405	195	275	325	355
P7	240	340	395	440	210	300	350	390	210	300	355	385	185	260	305	335
P8	225	315	375	410	195	280	330	360	195	275	330	355	170	240	285	310
P11	230	330	385	430	205	290	340	380	205	290	345	375	180	250	300	325
M1	—	—	—	—	190	275	325	355	205	290	340	380	185	265	310	345
M2	—	—	—	—	160	225	265	290	170	240	285	310	155	215	255	285
M3	—	—	—	—	130	180	215	240	140	195	230	250	125	175	210	230
M4	—	—	—	—	100	140	170	190	105	150	180	195	95	135	160	175
M5	—	—	—	—	85	120	140	155	90	125	150	160	80	115	135	145
K1	235	340	400	440	210	300	355	390	—	—	—	—	185	260	305	335
K2	210	300	355	390	185	270	315	345	—	—	—	—	160	230	270	300
K3	180	255	300	330	160	225	265	290	—	—	—	—	135	195	230	255
K4	170	245	290	315	150	215	255	280	—	—	—	—	130	185	220	240
K5	105	150	175	195	95	135	155	170	—	—	—	—	80	115	135	145
K6	150	215	255	275	135	190	225	245	—	—	—	—	115	165	195	215
K7	135	190	225	250	120	170	200	220	—	—	—	—	105	145	175	190
N1	—	—	—	—	—	—	—	—	—	—	—	—	670	950	1125	1225
N2	—	—	—	—	—	—	—	—	—	—	—	—	540	770	920	1000
N3	—	—	—	—	—	—	—	—	—	—	—	—	365	510	610	670
N11	—	—	—	—	—	—	—	—	—	—	—	—	415	590	700	760
S1	—	—	—	—	—	—	—	—	50	70	85	90	45	65	75	85
S2	—	—	—	—	—	—	—	—	40	55	65	75	36	50	60	65
S3	—	—	—	—	—	—	—	—	36	49	60	65	33	45	55	60
S11	—	—	—	—	—	—	—	—	70	95	115	125	65	90	105	115
S12	—	—	—	—	—	—	—	—	41	55	65	75	37	50	60	65
S13	—	—	—	—	—	—	—	—	32	45	55	60	29	41	49	55
H5	50	70	85	95	41	55	70	75	45	60	75	80	39	55	65	70
H8	55	75	90	100	44	60	75	80	47	65	80	85	41	55	70	75
H11	65	90	110	120	50	70	85	95	55	80	95	105	49	70	80	90
H12	95	135	165	180	80	110	130	145	85	120	140	155	75	105	120	135
H21	55	75	90	100	44	60	75	80	47	65	80	85	41	55	70	75

R217/220.29-08 – Cutting data v_c = (m/min)

	MK2050				MM4500				MS2050				MS2500			
SMG	100%	30%	10%	5%	100%	30%	10%	5%	100%	30%	10%	5%	100%	30%	10%	5%
P1	220	315	375	410	195	270	325	355	—	—	—	—	325	455	540	590
P2	215	300	365	400	190	265	315	345	—	—	—	—	310	440	530	570
P3	190	265	320	340	165	230	275	295	—	—	—	—	270	385	460	495
P4	165	235	280	310	145	205	245	265	—	—	—	—	245	345	405	445
P5	160	230	270	295	140	195	230	255	—	—	—	—	230	325	385	425
P6	180	260	300	330	160	225	265	285	—	—	—	—	260	365	440	480
P7	170	245	285	315	150	210	250	270	—	—	—	—	245	345	415	450
P8	160	225	270	290	140	195	230	250	—	—	—	—	230	320	385	420
P11	165	235	275	305	145	205	240	265	—	—	—	—	240	335	400	440
M1	—	—	—	—	160	225	270	295	225	295	335	355	225	315	380	405
M2	—	—	—	—	130	185	220	245	190	240	270	285	185	260	310	340
M3	—	—	—	—	110	150	180	195	150	185	195	205	150	210	250	280
M4	—	—	—	—	85	115	140	155	115	135	140	150	115	165	195	215
M5	—	—	—	—	70	95	115	125	95	110	115	125	95	135	165	175
K1	230	325	395	430	—	—	—	—	—	—	—	—	—	—	—	—
K2	205	295	350	385	—	—	—	—	—	—	—	—	—	—	—	—
K3	175	250	295	325	—	—	—	—	—	—	—	—	—	—	—	—
K4	165	240	280	310	—	—	—	—	—	—	—	—	—	—	—	—
K5	100	145	175	190	—	—	—	—	—	—	—	—	—	—	—	—
K6	145	210	250	270	—	—	—	—	—	—	—	—	—	—	—	—
K7	130	190	225	245	—	—	—	—	—	—	—	—	—	—	—	—
N1	—	—	—	—	—	—	—	—	—	—	—	—	—	—	—	—
N2	—	—	—	—	—	—	—	—	—	—	—	—	—	—	—	—
N3	—	—	—	—	—	—	—	—	—	—	—	—	—	—	—	—
N11	—	—	—	—	—	—	—	—	—	—	—	—	—	—	—	—
S1	—	—	—	—	26	36	43	47	40	60	70	75	55	80	95	105
S2	—	—	—	—	21	29	34	38	33	46	55	60	46	65	75	85
S3	—	—	—	—	18	25	30	33	29	42	50	55	40	55	70	75
S11	—	—	—	—	36	50	60	65	55	75	90	100	80	110	135	145
S12	—	—	—	—	28	38	46	50	41	60	70	80	46	65	75	85
S13	—	—	—	—	22	31	37	40	35	50	60	65	37	50	60	65
H5	—	—	—	—	—	—	—	—	—	—	—	—	—	—	—	—
H8	—	—	—	—	—	—	—	—	—	—	—	—	—	—	—	—
H11	—	—	—	—	—	—	—	—	—	—	—	—	—	—	—	—
H12	—	—	—	—	—	—	—	—	—	—	—	—	—	—	—	—
H21	—	—	—	—	—	—	—	—	—	—	—	—	—	—	—	—

R217.29-10

Cutters with round inserts, max. axial cutting depth 10 mm

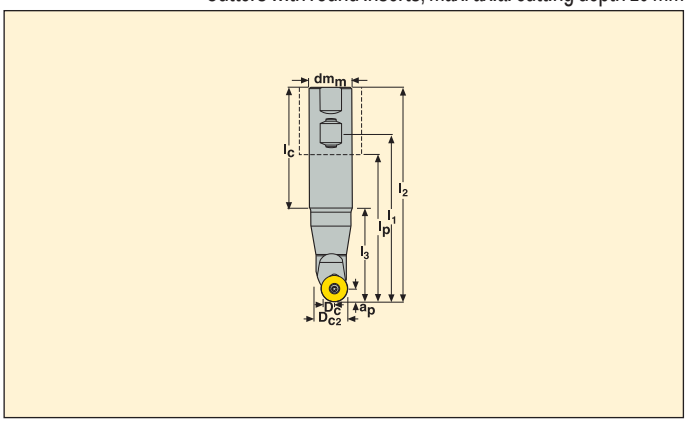

- For insert selection and cutting data recommendations, see page(s) 354-355
- For complete insert programme, see page(s) [XXX]
- For helical interpolation, see page(s) 682-683

Part No.	Type of mounting	Dimensions in mm									α° max		KG		Insert
		a_p	D_{c2}	D_c	dm_m	l_1	l_2	l_3	l_p	l_c					
R217.29 -3250.3-10.3.080	Cyl.-Weldon	10	50	30	32	104	140	79	80	87	9,5	3	1,0	6500	RP..2006

Ramping angle = α°

Spare Parts

For cutter	Insert screw	Insert key
R217.29-..	C05013-T20P	T20P-4

Please check availability in current price and stock-list

Torque value 5,0 Nm, Torque keys, see page 690

R220.29-10

Cutters with round inserts, max. axial cutting depth 10 mm

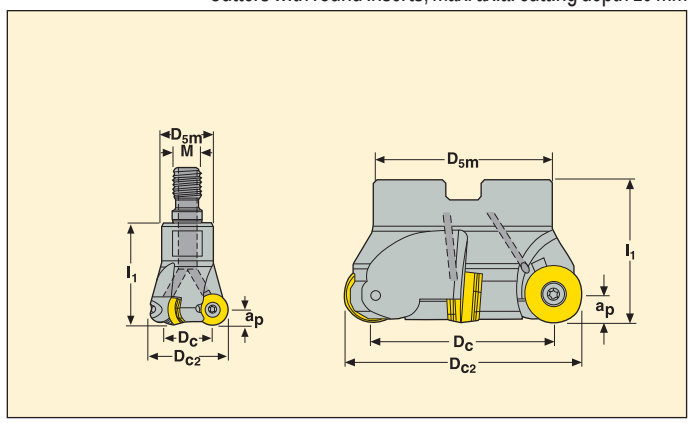

- For insert selection and cutting data recommendations, see page(s) 354-355
- For complete insert programme, see page(s) [XXX]
- For helical interpolation, see page(s) 682-683

Part No.	Type of mounting	Dimensions in mm							α° max		KG		Insert
		a_p	D_{c2}	D_c	D_{5m}	dm_m	l_1	M					
R217.29 -1640.RE-10.2A	Combimaster	10	40	20	30	–	40	M16	40	2	0,3	8400	RP..2006
R217.29 -2040.RE-10.2A	Combimaster	10	40	20	36,5	–	40	M20	40	2	0,3	8400	RP..2006
R220.29 -0063-10.4A	Arbor	10	63	43	47	22	50	–	6	4	0,5	5800	RP..2006
R220.29 -0080-10.4MA	Arbor	10	80	60	62	27	50	–	6,5	4	0,9	2100	RP..2006
-0080-10.5A	Arbor	10	80	60	62	27	50	–	6,5	5	0,9	2100	RP..2006
R220.29 -0083-10.4MA	Arbor	10	83	63	62	27	50	–	6,2	4	0,9	5000	RP..2006

Ramping angle = α°

For Combimaster shanks and dimensions, see pages 588-598

Spare Parts

For cutter	Shim screw	Shim key	Insert shim	Insert screw	Insert key	Arbor screw
R217.29-..	–	–	–	C05013-T20P	T20P-4	–
R217.29-2040-10	–	–	–	C05013-T20P	T20P-4	–
R220.29-0063	–	–	–	C05013-T20P	T20P-4	220.17-692
R220.29-0080M-0083M	CA5010	5SMS795	SRP2004M0	C05018-T20P	T20P-4	MC6S12X35
R220.29-0080A	–	–	–	C05013-T20P	T20P-4	MC6S12X35

Please check availability in current price and stock-list

Torque value 5,0 Nm, Torque keys, see page 690

R220.29-10

Cutters with round inserts, max. axial cutting depth 10 mm

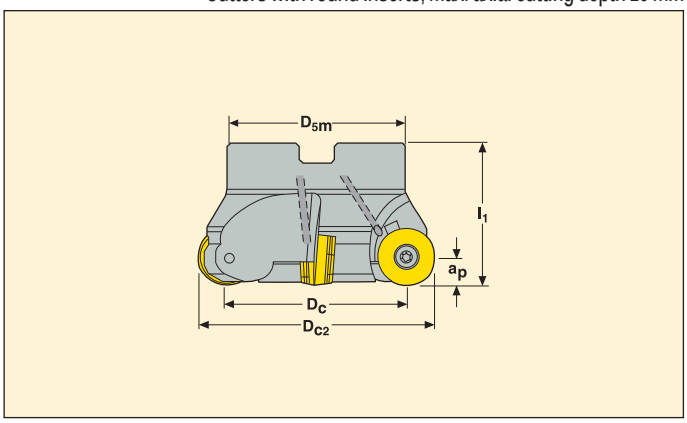

- For insert selection and cutting data recommendations, see page(s) 354-355
- For complete insert programme, see page(s) [XXX]
- For helical interpolation, see page(s) 682-683

Part No.	Type of mounting	Dimensions in mm a_p	D_{c2}	D_c	D_{5m}	dm_m	l_1	α° max		KG		Insert
R220.29 -0100-10.5MA	Arbor	10	100	80	77	32	50	4,7	5	1,4	4500	RP..2006
-0100-10.6A	Arbor	10	100	80	77	32	50	4,7	6	1,3	4500	RP..2006
R220.29 -0125-10.5MA	Arbor	10	125	105	90	40	63	3,47	5	2,9	4000	RP..2006
-0125-10.7A	Arbor	10	125	105	90	40	63	3,47	7	2,7	4000	RP..2006
R220.29 -8160-10.6M	Arbor	10	160	140	90	40	63	–	6	4,1	3600	RP..2006
R220.29 -8200-10.8M	Arbor	10	200	180	130	60	63	–	8	6,0	3200	RP..2006
R220.29 -8250-10.9M	Arbor	10	250	230	130	60	63	–	9	11,1	2900	RP..2006

Spare Parts

For cutter	Shim screw	Shim key	Insert shim	Insert screw	Insert key	Arbor screw
R220.29-0100M	CA5010	5SMS795	SRP2004M0	C05018-T20P	T20P-4	–
R220.29-0100-0125A	–	–	–	C05013-T20P	T20P-4	950E1645
R220.29-0125M	CA5010	5SMS795	SRP2004M0	C05018-T20P	T20P-4	MC6S20X45
R220.29-0100-0125A	–	–	–	C05013-T20P	T20P-4	MC6S20X50
R220.29-8160-8250M	CA5010	5SMS795	SRP2004M0	C05018-T20P	T20P-4	–

Please check availability in current price and stock-list
Torque value 5,0 Nm, Torque keys, see page 690

R217/220.29-10 – Insert selection

SMG		a_p	f_z			
			100%	30%	10%	5%
P1	RPHT2006M0T-ME12 T350M	4,0	0,38	0,42	0,65	0,90
P2	RPHT2006M0T-ME12 T350M	4,0	0,38	0,42	0,65	0,90
P3	RPHT2006M0T-ME12 T350M	4,0	0,36	0,40	0,60	0,85
P4	RPKT2006M0T-M20 MS2500	4,0	0,44	0,48	0,75	1,1
P5	RPKT2006M0T-M20 MS2500	4,0	0,44	0,48	0,75	1,0
P6	RPKT2006M0T-M20 MS2500	4,0	0,44	0,48	0,75	1,0
P7	RPKT2006M0T-M20 MS2500	4,0	0,44	0,48	0,75	1,0
P8	RPKT2006M0T-M20 MP2500	4,0	0,46	0,50	0,75	1,1
P11	RPKT2006M0T-M20 MS2500	4,0	0,44	0,48	0,75	1,0
M1	RPHT2006M0T-ME12 T350M	4,0	0,38	0,42	0,65	0,90
M2	RPHT2006M0T-ME12 T350M	4,0	0,34	0,38	0,60	0,85
M3	RPHT2006M0T-ME12 T350M	3,0	0,32	0,36	0,55	0,75
M4	RPHT2006M0T-ME12 T350M	2,5	0,30	0,34	0,50	0,75
M5	RPHT2006M0T-ME12 T350M	2,5	0,30	0,34	0,50	0,75
K1	RPKT2006M0T-M20 MK2050	4,0	0,48	0,50	0,80	1,2
K2	RPKT2006M0T-M20 MK2050	4,0	0,44	0,48	0,75	1,0
K3	RPKT2006M0T-M20 MK2050	4,0	0,44	0,48	0,75	1,0
K4	RPKT2006M0T-M20 MK2050	4,0	0,44	0,48	0,75	1,0
K5	RPKT2006M0T-M20 MK2050	4,0	0,40	0,42	0,65	0,95
K6	RPKT2006M0T-M20 MK2050	4,0	0,44	0,48	0,75	1,0
K7	RPKT2006M0T-M20 MK2050	4,0	0,40	0,42	0,65	0,95
S1	RPHT2006M0T-ME12 MS2500	2,5	0,30	0,34	0,50	0,75
S2	RPHT2006M0T-ME12 MS2500	2,5	0,30	0,34	0,50	0,75
S3	RPKT2006M0T-M15 MS2500	2,5	0,36	0,40	0,60	0,85
S11	RPHT2006M0T-ME12 MS2050	3,0	0,32	0,36	0,55	0,75
S12	RPHT2006M0T-ME12 MS2050	3,0	0,32	0,36	0,55	0,75
S13	RPHT2006M0T-ME12 MS2050	2,5	0,30	0,34	0,50	0,75
H5	RPKW2006M0T-MD22 F15M	3,0	0,50	0,55	0,85	1,2
H8	RPKW2006M0T-MD22 F15M	3,0	0,38	0,42	0,65	0,90
H11	RPKW2006M0T-MD22 F15M	3,0	0,50	0,55	0,85	1,2
H12	RPKT2006M0T-M15 T350M	3,0	0,34	0,38	0,60	0,80
H21	RPKW2006M0T-MD22 F15M	3,0	0,38	0,42	0,65	0,90

SMG = Seco material group
f_z = mm/tooth
v_c= m/min
a_e/D_c = %
All cutting data are start values

R217/220.29-10 – Cutting data v_c = (m/min)

	MP1500				MP2500				T350M				F15M				F30M			
SMG	100%	30%	10%	5%	100%	30%	10%	5%	100%	30%	10%	5%	100%	30%	10%	5%	100%	30%	10%	5%
P1	310	450	540	590	275	400	480	520	265	390	460	510	—	—	—	—	225	325	380	420
P2	305	440	530	570	270	390	465	510	260	370	445	485	—	—	—	—	215	310	370	410
P3	265	385	450	500	235	340	400	445	225	325	390	425	—	—	—	—	190	270	325	350
P4	235	340	410	440	210	300	360	390	200	290	340	375	—	—	—	—	170	245	285	310
P5	225	325	390	420	200	290	345	375	195	280	330	365	—	—	—	—	160	230	275	305
P6	255	370	435	480	225	325	385	425	220	310	370	410	—	—	—	—	185	260	310	340
P7	240	345	415	455	210	305	365	405	205	295	350	385	—	—	—	—	175	245	295	320
P8	220	325	380	420	195	285	335	375	190	275	325	355	—	—	—	—	160	230	275	295
P11	230	335	400	440	205	300	355	390	200	285	340	375	—	—	—	—	170	240	285	310
M1	—	—	—	—	195	280	335	365	200	285	345	370	—	—	—	—	175	250	300	330
M2	—	—	—	—	160	235	280	300	165	240	285	315	—	—	—	—	145	210	250	270
M3	—	—	—	—	130	190	225	250	135	195	230	250	—	—	—	—	120	165	200	215
M4	—	—	—	—	105	145	175	190	105	150	175	195	—	—	—	—	90	130	155	170
M5	—	—	—	—	85	120	145	160	90	125	145	160	—	—	—	—	75	105	130	140
K1	240	350	415	455	210	310	370	400	—	—	—	—	150	220	265	285	170	245	295	325
K2	215	310	370	400	190	275	330	355	—	—	—	—	135	195	240	255	150	220	260	285
K3	180	265	315	340	160	235	275	300	—	—	—	—	115	165	200	215	130	185	220	245
K4	175	250	300	325	155	220	265	285	—	—	—	—	110	160	195	205	125	180	210	230
K5	105	155	185	200	95	135	160	175	—	—	—	—	65	100	115	130	75	110	130	140
K6	150	220	265	285	135	195	235	250	—	—	—	—	95	140	170	180	110	155	185	205
K7	135	195	235	255	120	175	205	225	—	—	—	—	85	125	150	165	95	140	165	180
N1	—	—	—	—	—	—	—	—	—	—	—	—	—	—	—	—	—	—	—	—
N2	—	—	—	—	—	—	—	—	—	—	—	—	—	—	—	—	—	—	—	—
N3	—	—	—	—	—	—	—	—	—	—	—	—	—	—	—	—	—	—	—	—
N11	—	—	—	—	—	—	—	—	—	—	—	—	—	—	—	—	—	—	—	—
S1	—	—	—	—	—	—	—	—	49	70	80	90	—	—	—	—	43	60	70	80
S2	—	—	—	—	—	—	—	—	40	55	65	75	—	—	—	—	34	48	60	65
S3	—	—	—	—	—	—	—	—	35	49	60	65	—	—	—	—	30	42	50	55
S11	—	—	—	—	—	—	—	—	70	95	115	125	—	—	—	—	60	85	100	110
S12	—	—	—	—	—	—	—	—	39	55	65	75	—	—	—	—	35	48	60	65
S13	—	—	—	—	—	—	—	—	32	45	55	60	—	—	—	—	27	39	46	50
H5	50	75	85	95	41	60	70	75	43	60	75	80	33	47	55	60	36	50	60	65
H8	55	80	95	100	44	65	75	80	47	65	80	85	36	50	60	65	39	55	65	70
H11	65	95	110	120	55	75	90	95	55	80	95	100	42	60	70	80	46	65	75	85
H12	100	140	165	180	80	115	135	145	85	120	140	155	65	90	110	120	70	100	115	130
H21	55	80	95	100	44	65	75	80	47	65	80	85	36	50	60	65	39	55	65	70

R217/220.29-10 – Cutting data v_c = (m/min)

	F40M				MK2050				MM4500				MS2050				MS2500			
SMG	100%	30%	10%	5%	100%	30%	10%	5%	100%	30%	10%	5%	100%	30%	10%	5%	100%	30%	10%	5%
P1	230	335	400	440	270	395	470	510	190	275	325	355	280	370	410	435	335	485	570	630
P2	225	325	390	420	265	385	460	500	185	260	315	340	270	360	395	425	325	465	560	600
P3	200	285	340	370	230	335	395	435	160	230	275	300	240	310	340	365	285	405	485	530
P4	175	255	300	325	205	295	355	385	140	205	240	265	210	275	300	320	250	365	430	470
P5	170	240	290	315	195	285	340	370	135	195	235	255	205	260	285	300	245	350	415	455
P6	190	270	325	355	220	320	380	420	155	220	260	290	230	290	320	340	275	390	465	510
P7	180	255	305	335	210	305	360	395	145	205	245	270	215	275	300	320	260	370	440	485
P8	165	240	285	310	195	280	330	370	135	195	230	250	200	260	285	305	240	340	410	445
P11	175	250	295	325	200	295	350	385	140	200	240	265	210	270	295	310	250	360	425	470
M1	180	260	315	340	—	—	—	—	155	225	270	290	240	315	350	370	235	335	400	435
M2	150	215	260	285	—	—	—	—	130	185	225	245	200	255	280	295	195	280	330	365
M3	125	175	210	230	—	—	—	—	105	150	180	195	155	190	200	215	155	225	265	290
M4	95	135	160	175	—	—	—	—	85	115	140	150	120	135	145	150	125	175	205	225
M5	80	115	135	145	—	—	—	—	70	95	115	125	100	115	120	125	105	145	170	190
K1	180	255	310	335	285	415	495	540	—	—	—	—	—	—	—	—	—	—	—	—
K2	160	230	275	300	255	370	440	475	—	—	—	—	—	—	—	—	—	—	—	—
K3	135	195	230	255	215	310	370	400	—	—	—	—	—	—	—	—	—	—	—	—
K4	130	185	220	245	205	300	355	385	—	—	—	—	—	—	—	—	—	—	—	—
K5	80	115	135	150	125	185	215	235	—	—	—	—	—	—	—	—	—	—	—	—
K6	115	165	195	215	180	265	315	340	—	—	—	—	—	—	—	—	—	—	—	—
K7	100	145	170	190	160	235	280	305	—	—	—	—	—	—	—	—	—	—	—	—
N1	660	950	1125	1225	—	—	—	—	—	—	—	—	—	—	—	—	—	—	—	—
N2	530	760	900	990	—	—	—	—	—	—	—	—	—	—	—	—	—	—	—	—
N3	355	510	600	660	—	—	—	—	—	—	—	—	—	—	—	—	—	—	—	—
N11	405	580	690	750	—	—	—	—	—	—	—	—	—	—	—	—	—	—	—	—
S1	45	65	75	80	—	—	—	—	25	36	42	47	43	60	75	80	60	85	100	110
S2	36	50	60	65	—	—	—	—	20	29	34	37	35	50	60	65	48	70	80	90
S3	32	45	55	60	—	—	—	—	18	25	30	33	31	45	55	55	43	60	70	80
S11	60	90	105	115	—	—	—	—	35	50	60	65	55	85	100	105	85	120	140	155
S12	36	50	60	65	—	—	—	—	27	38	46	50	43	65	75	80	48	70	80	90
S13	29	41	48	55	—	—	—	—	22	31	36	40	37	55	65	65	39	55	65	70
H5	38	55	65	70	—	—	—	—	—	—	—	—	—	—	—	—	—	—	—	—
H8	41	55	70	75	—	—	—	—	—	—	—	—	—	—	—	—	—	—	—	—
H11	48	70	80	90	—	—	—	—	—	—	—	—	—	—	—	—	—	—	—	—
H12	70	105	125	135	—	—	—	—	—	—	—	—	—	—	—	—	—	—	—	—
H21	41	55	70	75	—	—	—	—	—	—	—	—	—	—	—	—	—	—	—	—

R218.20

90° ball nose cutters dia 16-40

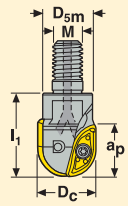

- For insert selection and cutting data recommendations, see page(s) 359-377
- For complete insert programme, see page(s) [XXX]

Part No.	Type of mounting	Dimensions in mm a_p	D_c	D_{5m}	l_1	M		Z_c*	KG		() = No of inserts 218.20
R218.20 -0816.RE-14A	Combimaster	14	16	13,5	23	M8	2	2	0,1	28500	-080(2)
-1016.RE-14A	Combimaster	14	16	18	28	M10	2	2	0,1	28500	-080(2)
R218.20 -1020.RE-18A	Combimaster	18	20	18	28	M10	2	2	0,1	20200	-100(2)
-1220.RE-18A	Combimaster	18	20	21,5	35	M12	2	2	0,2	20200	-100(2)
R218.20 -1225.RE-22A	Combimaster	22	25	21,5	35	M12	2	2	0,1	16900	-125(2)
R218.20 -1630.RE-26A	Combimaster	27	30	28,5	40	M16	2	2	0,2	12500	-150(2)
R218.20 -1632.RE-28A	Combimaster	28	32	28,5	40	M16	2	2	0,3	10900	-160(2)
R218.20 -1640.RE-35A	Combimaster	35	40	34	50	M16	2	2	0,3	7200	-200(2)
-2040.RE-35A	Combimaster	35	40	36,5	54,9	M20	2	2	0,3	7200	-200(2)
R218.20 -2050.RE-44A	Combimaster	44	50	36,5	64,87	M20	2	2	0,4	5000	-250(2)

For Combimaster shanks and dimensions, see pages 588-598

Spare Parts

For cutter	Insert screw	Insert key
R218.20-.. Ø16	C02506-T08P	T08P-3
R218.20-.. Ø20	C03007-T09P	T09P-3
R218.20-.. Ø25-30	C04009-T15P	T15P-3
R218.20-.. Ø32	C04011-T15P	T15P-3
R218.20-..1640	C05013-T20P	T20P-4
R218.20-..2040	C05013-T20P	T20P-3
R218.20-.. Ø50	C06018-T25P	T25P-3

Please check availability in current price and stock-list

Torque value Dia 12 0,5 Nm, Dia 16 1,2 Nm, Dia 20 2,0 Nm and Dia 25-32 3,5 Nm, Dia 40 5,0 Nm. Torque keys, see page 690

R218.20

90° ball nose cutters dia 16-32

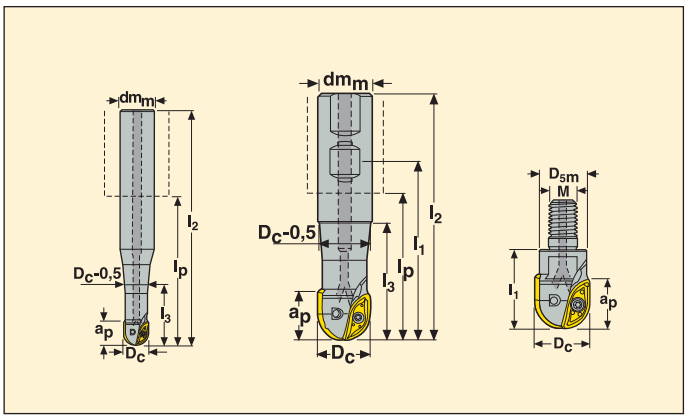

- For insert selection and cutting data recommendations, see page(s) 359-377
- For complete insert programme, see page(s)634, 646

Part No.	Type of mounting	Dimensions in mm a_p	D_c	dm_m	l_2	l_3	l_p	l_c		Z_c*	KG		() = No of inserts 218.20	SPMT
R218.20 -2016.0-14.070A	Cylindrical	14	16	20	120	36	70	70	2	2	0,3	28500	-080(2)	–
-1616.0-14.105E	Cylindrical	14	16	16	165	49	117	115	2	2	0,5	28500	-080(2)	–
R218.20 -2520.3-18.070A	Cyl.-Weldon	18	20	25	126	54	70	56	2	2	0,4	20200	-100(2)	–
-2520.0-18.120A	Cylindrical	18	20	25	176	54	120	104	2	2	0,5	20200	-100(2)	–
R218.20 -3225.0-22.160A	Cylindrical	22	25	32	220	68	160	130	2	2	1,1	16900	-125(2)	–
-2525.3-22.060A	Cyl.-Weldon	22	25	25	116	56	60	60	2	2	0,4	16900	-125(2)	–
-2525.3-22.080A	Cyl.-Weldon	22	25	25	136	75,5	80	60	2	2	0,5	16900	-125(2)	–
R218.20 -3230.3-45.100A	Cyl.-Weldon	44	30	32	160	71	100	70	4	2	0,8	12500	-150(2)	SPMT10(2)
-3230.0-26.160A	Cylindrical	27	30	32	220	73	160	130	2	2	1,1	12500	-150(2)	–
R218.20 -3232.3-28.070A	Cyl.-Weldon	28	32	32	130	68	70	60	2	2	0,7	10900	-160(2)	–
-3232.3-28.100A	Cyl.-Weldon	28	32	32	160	89	100	70	2	2	0,8	10900	-160(2)	–
-3232.3-54.100A	Cyl.-Weldon	54	32	32	160	89	100	70	5	2	0,8	10900	-160(2)	SPMT10(3)
-3232.0-28.160A	Cylindrical	28	32	32	220	90	160	130	2	2	1,2	10900	-160(2)	–

Spare Parts

For cutter	Insert screw periph	Insert screw centre	Insert screw	Insert key
				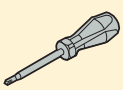
Dia 16	–	–	C02506-T08P	T08P-3
Dia 20	–	–	C03007-T09P	T09P-3
Dia 25	–	–	C04009-T15P	T15P-3
Dia 30-100A	C03508-T15P	C04009-T15P	–	T15P-3
Dia 30	–	–	C04009-T15P	T15P-3
Dia 32	–	–	C04011-T15P	T15P-3
Dia 32-100A	C03508-T15P	C04011-T15P	–	T15P-3

Please check availability in current price and stock-list

Torque value Dia 12 0,5 Nm, Dia 16 1,2 Nm, Dia 20 2,0 Nm and Dia 25-32 3,5 Nm. Torque keys, see page 690

R218.20

90° ball nose cutters dia 40-50

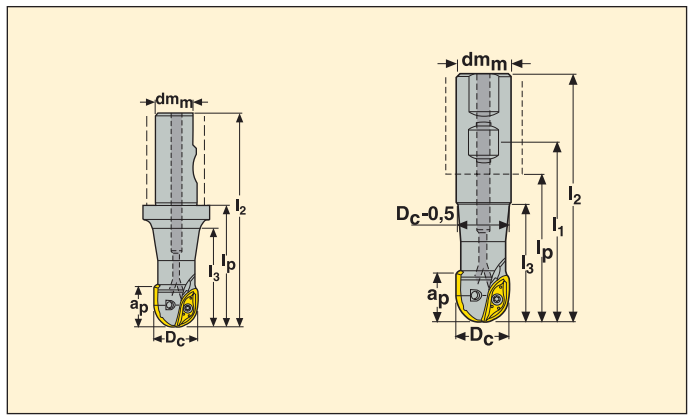

- For insert selection and cutting data recommendations, see page(s) 359-377
- For complete insert programme, see page(s)634, 617

Part No.	Type of mounting	Dimensions in mm								Z_c*	KG		() = No of inserts	
		a_p	D_c	dm_m	l_2	l_3	l_p	l_c					218.20	SCE.
R218.20 -3240.3S-60.100	Seco-Weldon	60	40	32	159,4	89	99,9	59,5	5	2	1,0	7200	-200(2)	3
R218.20 -3250.3S-70.100	Seco-Weldon	70	50	32	159,37	91	99,87	59,5	5	2	1,2	3700	-250(2)	3
-5050.3-70.150	Cyl.-Weldon	70	50	50	229,87	149	149,87	80	5	2	2,9	3700	-250(2)	3

Spare Parts

For cutter	Key periphery	Insert screw periph	Insert screw centre	Insert key	Centre key
Dia 40	–	C45011-T20P	C05013-T20P	T20P-4	–
Dia 50	T20P-4	C45011-T20P	C06018-T25P	–	T25P-3

Please check availability in current price and stock-list

Torque value Dia 40 5,0 Nm, Dia 50 6,0 Nm. Torque keys, see page 690

R218.20-080 – Insert selection – Roughing

SMG		f_z			
		100%	30%	20%	15%
P1	218.20-080ER-ME04 F40M	0,14	0,20	0,17	0,20
P2	218.20-080ER-ME04 F40M	0,14	0,20	0,18	0,20
P3	218.20-080ER-ME04 F40M	0,13	0,19	0,17	0,19
P4	218.20-080ER-M04 F25M	0,13	0,19	0,16	0,19
P5	218.20-080ER-M04 F25M	0,13	0,18	0,16	0,18
P6	218.20-080ER-M04 F25M	0,13	0,18	0,16	0,18
P7	218.20-080ER-M04 F25M	0,13	0,18	0,16	0,18
P8	218.20-080ER-M04 F25M	0,13	0,19	0,17	0,19
P11	218.20-080ER-M04 F25M	0,13	0,18	0,16	0,18
M1	218.20-080ER-ME04 F40M	0,14	0,20	0,18	0,20
M2	218.20-080ER-ME04 F40M	0,13	0,18	0,16	0,18
M3	218.20-080ER-ME04 F40M	0,10	0,15	0,13	0,15
M4	218.20-080ER-ME04 F40M	0,090	0,13	0,11	0,13
M5	218.20-080ER-M04 F40M	0,090	0,13	0,11	0,13
K1	218.20-080ER-M04 F25M	—	—	—	—
K2	218.20-080ER-M04 F25M	—	—	—	—
K3	218.20-080ER-M04 F25M	—	—	—	—
K4	218.20-080ER-M04 F25M	—	—	—	—
K5	218.20-080ER-M04 F25M	—	—	—	—
K6	218.20-080ER-M04 F25M	—	—	—	—
K7	218.20-080ER-M04 F25M	—	—	—	—
N1	218.20-080ER-ME04 F40M	0,18	0,26	0,22	0,26
N2	218.20-080ER-ME04 F40M	0,18	0,26	0,22	0,26
N3	218.20-080ER-ME04 F40M	0,18	0,26	0,22	0,26
N11	218.20-080ER-ME04 F40M	0,18	0,26	0,22	0,26
S1	218.20-080ER-ME04 T350M	0,090	0,13	0,11	0,13
S2	218.20-080ER-ME04 T350M	0,090	0,13	0,11	0,13
S3	218.20-080ER-ME04 T350M	0,085	0,12	0,10	0,12
S11	218.20-080ER-ME04 MS2050	0,060	0,085	0,075	0,085
S12	218.20-080ER-ME04 MS2050	0,060	0,085	0,075	0,085
S13	218.20-080ER-ME04 MS2050	0,050	0,070	0,065	0,070
H5	218.20-080ER-M04 F25M	0,090	0,12	0,11	0,12
H8	218.20-080ER-M04 F25M	0,065	0,095	0,085	0,095
H11	218.20-080ER-M04 F25M	0,090	0,12	0,11	0,12
H12	218.20-080ER-M04 F25M	0,090	0,12	0,11	0,12
H21	218.20-080ER-M04 F25M	0,065	0,095	0,085	0,095

SMG = Seco material group
f_z = mm/tooth
v_c= m/min
a_e/D_c = %
All cutting data are start values

R218.20-080 – Insert selection – Semi finishing

SMG		f_z			
		15%	12%	10%	8%
P1	218.20-080ER-ME04 F40M	0,20	0,22	0,24	0,26
P2	218.20-080ER-ME04 F40M	0,20	0,22	0,24	0,26
P3	218.20-080ER-ME04 F40M	0,19	0,20	0,22	0,26
P4	218.20-080ER-M04 F25M	0,19	0,20	0,22	0,24
P5	218.20-080ER-M04 F25M	0,18	0,20	0,22	0,24
P6	218.20-080ER-M04 F25M	0,18	0,20	0,22	0,24
P7	218.20-080ER-M04 F25M	0,18	0,20	0,22	0,24
P8	218.20-080ER-M04 F25M	0,19	0,20	0,22	0,26
P11	218.20-080ER-M04 F25M	0,18	0,20	0,22	0,24
M1	218.20-080ER-ME04 F40M	0,20	0,22	0,24	0,26
M2	218.20-080ER-ME04 F40M	0,18	0,20	0,22	0,24
M3	218.20-080ER-ME04 F40M	0,15	0,16	0,17	0,19
M4	218.20-080ER-ME04 F40M	0,13	0,14	0,15	0,17
M5	218.20-080ER-ME04 F40M	0,13	0,14	0,15	0,17
K1	218.20-080ER-M04 F25M	—	—	—	—
K2	218.20-080ER-M04 F25M	—	—	—	—
K3	218.20-080ER-M04 F25M	—	—	—	—
K4	218.20-080ER-M04 F25M	—	—	—	—
K5	218.20-080ER-M04 F25M	—	—	—	—
K6	218.20-080ER-M04 F25M	—	—	—	—
K7	218.20-080ER-M04 F25M	—	—	—	—
N1	218.20-080ER-ME04 F40M	0,26	0,28	0,30	0,34
N2	218.20-080ER-ME04 F40M	0,26	0,28	0,30	0,34
N3	218.20-080ER-ME04 F40M	0,26	0,28	0,30	0,34
N11	218.20-080ER-ME04 F40M	0,26	0,28	0,30	0,34
S1	218.20-080ER-ME04 T350M	0,13	0,14	0,15	0,17
S2	218.20-080ER-ME04 T350M	0,13	0,14	0,15	0,17
S3	218.20-080ER-ME04 T350M	0,12	0,13	0,14	0,16
S11	218.20-080ER-ME04 MS2050	0,085	0,090	0,10	0,11
S12	218.20-080ER-ME04 MS2050	0,085	0,090	0,10	0,11
S13	218.20-080ER-ME04 MS2050	0,070	0,080	0,085	0,095
H5	218.20-080ER-M04 F25M	0,12	0,14	0,15	0,16
H8	218.20-080ER-M04 F25M	0,095	0,10	0,11	0,12
H11	218.20-080ER-M04 F25M	0,12	0,14	0,15	0,16
H12	218.20-080ER-M04 F25M	0,12	0,14	0,15	0,16
H21	218.20-080ER-M04 F25M	0,095	0,10	0,11	0,12

SMG = Seco material group
f_z = mm/tooth
v_c= m/min
a_e/D_c = %
All cutting data are start values

R218.20-080 – Cutting data v_c = (m/min)

	T350M					F25M					F40M					MM4500					MS2050				
SMG	100%	30%	20%	10%	5%	100%	30%	20%	10%	5%	100%	30%	20%	10%	5%	100%	30%	20%	10%	5%	100%	30%	20%	10%	5%
P1	295	425	410	450	490	270	395	380	415	455	255	370	355	390	425	200	290	280	305	335	205	215	220	220	240
P2	285	415	395	435	475	265	385	365	405	440	250	360	345	380	415	195	280	270	300	325	200	210	215	230	235
P3	250	360	345	385	415	230	335	320	355	385	215	315	300	335	360	170	245	235	260	285	160	180	175	180	190
P4	220	315	310	340	365	205	295	285	315	340	190	275	265	295	320	150	215	210	230	250	145	160	155	160	170
P5	210	305	295	320	355	195	285	275	300	330	185	265	255	280	310	145	210	200	220	245	135	140	140	140	150
P6	235	345	330	360	400	220	320	305	335	370	205	300	285	315	345	160	235	225	250	270	155	155	155	160	170
P7	225	325	310	340	375	205	300	290	315	350	195	280	270	295	325	150	220	215	235	255	145	145	145	150	160
P8	210	300	290	320	350	195	280	270	300	325	185	265	250	280	305	145	205	200	220	240	135	150	145	155	160
P11	215	315	300	330	365	200	295	280	310	340	190	275	265	290	320	150	215	205	225	250	140	140	145	145	155
M1	220	320	305	335	365	—	—	—	—	—	200	290	275	305	335	165	240	230	255	280	175	185	185	200	205
M2	180	265	255	280	305	—	—	—	—	—	165	240	230	250	280	140	200	190	210	230	135	135	135	135	145
M3	155	210	200	225	245	—	—	—	—	—	140	190	185	205	220	120	160	155	170	185	75	85	85	85	90
M4	135	160	155	175	185	—	—	—	—	—	120	145	145	155	170	100	125	120	130	140	27	49	50	50	55
M5	110	135	130	145	155	—	—	—	—	—	100	125	120	130	140	85	105	100	110	120	22	41	43	42	45
K1	—	—	—	—	—	—	—	—	—	—	195	285	270	300	330	—	—	—	—	—	—	—	—	—	—
K2	—	—	—	—	—	—	—	—	—	—	175	255	240	265	295	—	—	—	—	—	—	—	—	—	—
K3	—	—	—	—	—	—	—	—	—	—	145	215	205	225	250	—	—	—	—	—	—	—	—	—	—
K4	—	—	—	—	—	—	—	—	—	—	140	205	195	215	235	—	—	—	—	—	—	—	—	—	—
K5	—	—	—	—	—	—	—	—	—	—	85	125	120	130	145	—	—	—	—	—	—	—	—	—	—
K6	—	—	—	—	—	—	—	—	—	—	125	180	170	190	210	—	—	—	—	—	—	—	—	—	—
K7	—	—	—	—	—	—	—	—	—	—	110	160	150	165	185	—	—	—	—	—	—	—	—	—	—
N1	—	—	—	—	—	—	—	—	—	—	730	1050	1025	1125	1225	—	—	—	—	—	—	—	—	—	—
N2	—	—	—	—	—	—	—	—	—	—	590	850	820	910	980	—	—	—	—	—	—	—	—	—	—
N3	—	—	—	—	—	—	—	—	—	—	390	570	550	610	650	—	—	—	—	—	—	—	—	—	—
N11	—	—	—	—	—	—	—	—	—	—	445	650	630	690	750	—	—	—	—	—	—	—	—	—	—
S1	60	75	75	80	85	—	—	—	—	—	55	70	65	75	80	31	38	37	40	44	70	80	80	85	90
S2	50	60	60	65	70	—	—	—	—	—	46	55	55	60	65	25	30	29	32	35	55	65	65	65	70
S3	44	55	50	55	60	—	—	—	—	—	40	49	47	50	55	22	27	26	28	31	48	55	55	60	60
S11	85	105	100	115	125	—	—	—	—	—	75	95	95	105	110	42	55	50	55	60	100	115	110	120	125
S12	48	60	60	65	70	—	—	—	—	—	44	55	55	60	65	32	41	39	44	47	75	90	85	90	95
S13	40	49	47	50	55	—	—	—	—	—	37	44	43	47	50	27	32	31	35	37	60	70	70	70	75
H5	49	70	65	70	80	45	65	60	65	75	43	60	55	60	70	—	—	—	—	—	—	—	—	—	—
H8	55	70	70	75	80	50	65	65	70	75	48	60	60	65	70	—	—	—	—	—	—	—	—	—	—
H11	60	85	80	90	100	60	80	75	85	90	55	75	70	80	85	—	—	—	—	—	—	—	—	—	—
H12	95	130	125	135	150	85	120	115	125	140	80	115	110	120	130	—	—	—	—	—	—	—	—	—	—
H21	55	70	70	75	80	50	65	65	70	75	48	60	60	65	70	—	—	—	—	—	—	—	—	—	—

R218.20-100 – Insert selection – Roughing

SMG		f_z			
		100%	30%	20%	15%
P1	218.20-100ER-ME05 F40M	0,13	0,19	0,17	0,19
P2	218.20-100ER-ME05 F40M	0,14	0,19	0,17	0,19
P3	218.20-100ER-ME05 F40M	0,13	0,18	0,16	0,18
P4	218.20-100ER-M05 F25M	0,13	0,18	0,16	0,18
P5	218.20-100ER-M05 F25M	0,12	0,17	0,15	0,17
P6	218.20-100ER-M05 F25M	0,12	0,17	0,15	0,17
P7	218.20-100ER-M05 F25M	0,12	0,17	0,15	0,17
P8	218.20-100ER-M05 F25M	0,13	0,18	0,16	0,18
P11	218.20-100ER-M05 F25M	0,12	0,17	0,15	0,17
M1	218.20-100ER-ME05 F40M	0,14	0,19	0,17	0,19
M2	218.20-100ER-ME05 F40M	0,12	0,17	0,15	0,17
M3	218.20-100ER-ME05 F40M	0,10	0,14	0,13	0,14
M4	218.20-100ER-ME05 F40M	0,090	0,13	0,11	0,13
M5	218.20-100ER-M05 F40M	0,090	0,13	0,11	0,13
K1	218.20-100ER-M05 F25M	—	—	—	—
K2	218.20-100ER-M05 F25M	—	—	—	—
K3	218.20-100ER-M05 F25M	—	—	—	—
K4	218.20-100ER-M05 F25M	—	—	—	—
K5	218.20-100ER-M05 F25M	—	—	—	—
K6	218.20-100ER-M05 F25M	—	—	—	—
K7	218.20-100ER-M05 F25M	—	—	—	—
N1	218.20-100ER-ME05 F40M	0,17	0,24	0,22	0,24
N2	218.20-100ER-ME05 F40M	0,17	0,24	0,22	0,24
N3	218.20-100ER-ME05 F40M	0,17	0,24	0,22	0,24
N11	218.20-100ER-ME05 F40M	0,17	0,24	0,22	0,24
S1	218.20-100ER-ME05 F40M	0,090	0,13	0,11	0,13
S2	218.20-100ER-ME05 F40M	0,090	0,13	0,11	0,13
S3	218.20-100ER-ME05 F40M	0,085	0,12	0,10	0,12
S11	218.20-100ER-ME05 MS2050	0,075	0,10	0,090	0,10
S12	218.20-100ER-ME05 MS2050	0,075	0,10	0,090	0,10
S13	218.20-100ER-ME05 MS2050	0,065	0,090	0,080	0,090
H5	218.20-100ER-M05 F25M	0,090	0,12	0,11	0,12
H8	218.20-100ER-M05 F25M	0,065	0,095	0,085	0,095
H11	218.20-100ER-M05 F25M	0,090	0,12	0,11	0,12
H12	218.20-100ER-M05 F25M	0,090	0,12	0,11	0,12
H21	218.20-100ER-M05 F25M	0,065	0,095	0,085	0,095

SMG = Seco material group
f_z = mm/tooth
v_c= m/min
a_e/D_c = %
All cutting data are start values

R218.20-100 – Insert selection – Semi finishing

SMG		f_z			
		15%	12%	10%	8%
P1	218.20-100ER-ME05 F40M	0,19	0,20	0,22	0,24
P2	218.20-100ER-ME05 F40M	0,19	0,22	0,22	0,26
P3	218.20-100ER-ME05 F40M	0,18	0,20	0,22	0,24
P4	218.20-100ER-M05 F25M	0,18	0,19	0,22	0,24
P5	218.20-100ER-M05 F25M	0,17	0,19	0,20	0,24
P6	218.20-100ER-M05 F25M	0,17	0,19	0,20	0,22
P7	218.20-100ER-M05 F25M	0,17	0,19	0,20	0,22
P8	218.20-100ER-M05 F25M	0,18	0,20	0,22	0,24
P11	218.20-100ER-M05 F25M	0,17	0,19	0,20	0,22
M1	218.20-100ER-ME05 F40M	0,19	0,22	0,22	0,26
M2	218.20-100ER-ME05 F40M	0,17	0,19	0,20	0,24
M3	218.20-100ER-ME05 F40M	0,14	0,16	0,17	0,19
M4	218.20-100ER-ME05 F40M	0,13	0,14	0,15	0,17
M5	218.20-100ER-ME05 F40M	0,13	0,14	0,15	0,17
K1	218.20-100ER-M05 F25M	—	—	—	—
K2	218.20-100ER-M05 F25M	—	—	—	—
K3	218.20-100ER-M05 F25M	—	—	—	—
K4	218.20-100ER-M05 F25M	—	—	—	—
K5	218.20-100ER-M05 F25M	—	—	—	—
K6	218.20-100ER-M05 F25M	—	—	—	—
K7	218.20-100ER-M05 F25M	—	—	—	—
N1	218.20-100ER-ME05 F40M	0,24	0,26	0,30	0,32
N2	218.20-100ER-ME05 F40M	0,24	0,26	0,30	0,32
N3	218.20-100ER-ME05 F40M	0,24	0,26	0,30	0,32
N11	218.20-100ER-ME05 F40M	0,24	0,26	0,30	0,32
S1	218.20-100ER-ME05 F40M	0,13	0,14	0,15	0,17
S2	218.20-100ER-ME05 F40M	0,13	0,14	0,15	0,17
S3	218.20-100ER-ME05 F40M	0,12	0,13	0,14	0,16
S11	218.20-100ER-ME05 MS2050	0,10	0,11	0,12	0,14
S12	218.20-100ER-ME05 MS2050	0,10	0,11	0,12	0,14
S13	218.20-100ER-ME05 MS2050	0,090	0,10	0,11	0,12
H5	218.20-100ER-M05 F25M	0,12	0,14	0,15	0,16
H8	218.20-100ER-M05 F25M	0,095	0,10	0,11	0,12
H11	218.20-100ER-M05 F25M	0,12	0,14	0,15	0,16
H12	218.20-100ER-M05 F25M	0,12	0,14	0,15	0,16
H21	218.20-100ER-M05 F25M	0,095	0,10	0,11	0,12

SMG = Seco material group
f_z = mm/tooth
v_c= m/min
a_e/D_c = %
All cutting data are start values

R218.20-100 – Cutting data v_c = (m/min)

	F25M					F40M					MM4500					MS2050				
SMG	100%	30%	20%	10%	5%	100%	30%	20%	10%	5%	100%	30%	20%	10%	5%	100%	30%	20%	10%	5%
P1	270	390	375	420	455	250	360	345	385	415	200	290	280	310	335	225	250	250	260	270
P2	260	380	365	405	440	235	350	335	375	405	190	285	270	300	325	220	255	245	250	265
P3	225	335	320	350	385	210	305	290	320	355	170	245	235	260	285	185	205	195	205	225
P4	200	295	280	310	340	185	270	255	280	310	150	215	210	230	250	160	185	175	180	185
P5	195	285	270	300	325	180	260	250	275	295	145	210	200	225	240	155	165	165	175	175
P6	220	320	305	340	370	200	290	280	310	340	160	235	225	250	275	165	185	185	195	195
P7	205	300	290	320	350	190	275	265	290	320	155	225	215	235	260	155	175	175	185	185
P8	190	280	270	295	325	175	255	245	270	295	140	205	200	220	240	155	175	165	175	190
P11	200	290	280	310	340	185	265	255	285	310	150	215	210	230	250	155	170	170	180	180
M1	—	—	—	—	—	190	280	270	300	325	165	245	230	260	280	195	225	215	220	230
M2	—	—	—	—	—	160	235	225	250	265	140	200	195	215	230	150	160	160	170	170
M3	—	—	—	—	—	140	185	180	195	215	120	160	155	170	185	95	100	100	105	105
M4	—	—	—	—	—	120	145	135	155	165	105	125	120	130	145	38	65	60	65	65
M5	—	—	—	—	—	100	120	115	130	140	85	105	100	110	120	31	55	50	50	55
K1	—	—	—	—	—	190	275	265	295	320	—	—	—	—	—	—	—	—	—	—
K2	—	—	—	—	—	170	245	235	260	280	—	—	—	—	—	—	—	—	—	—
K3	—	—	—	—	—	145	210	200	220	240	—	—	—	—	—	—	—	—	—	—
K4	—	—	—	—	—	135	200	190	210	225	—	—	—	—	—	—	—	—	—	—
K5	—	—	—	—	—	85	120	115	125	140	—	—	—	—	—	—	—	—	—	—
K6	—	—	—	—	—	120	175	170	185	200	—	—	—	—	—	—	—	—	—	—
K7	—	—	—	—	—	105	155	150	165	180	—	—	—	—	—	—	—	—	—	—
N1	—	—	—	—	—	700	1025	980	1075	1175	—	—	—	—	—	—	—	—	—	—
N2	—	—	—	—	—	570	830	790	870	950	—	—	—	—	—	—	—	—	—	—
N3	—	—	—	—	—	380	560	530	580	640	—	—	—	—	—	—	—	—	—	—
N11	—	—	—	—	—	435	630	600	660	730	—	—	—	—	—	—	—	—	—	—
S1	—	—	—	—	—	55	65	65	70	80	32	38	36	40	44	70	75	75	80	85
S2	—	—	—	—	—	45	55	50	60	65	26	31	29	33	35	55	60	60	65	70
S3	—	—	—	—	—	40	48	45	50	55	22	27	26	28	31	48	55	50	55	60
S11	—	—	—	—	—	75	95	90	100	110	41	55	50	55	60	95	110	105	115	120
S12	—	—	—	—	—	42	55	50	55	60	32	41	40	43	47	70	85	80	85	95
S13	—	—	—	—	—	36	43	41	46	50	27	33	31	35	38	60	65	65	70	75
H5	45	60	60	65	70	41	55	55	60	65	—	—	—	—	—	—	—	—	—	—
H8	50	65	65	70	75	46	60	55	65	70	—	—	—	—	—	—	—	—	—	—
H11	60	80	75	85	90	55	70	70	75	85	—	—	—	—	—	—	—	—	—	—
H12	85	120	115	125	135	80	110	105	115	125	—	—	—	—	—	—	—	—	—	—
H21	50	65	65	70	75	46	60	55	65	70	—	—	—	—	—	—	—	—	—	—

R218.20-125 – Insert selection – Roughing

SMG		f_z			
		100%	30%	20%	15%
P1	218.20-125ER-ME07 F40M	0,14	0,19	0,17	0,19
P2	218.20-125ER-ME07 F40M	0,14	0,20	0,17	0,20
P3	218.20-125ER-ME07 F40M	0,13	0,18	0,16	0,18
P4	218.20-125ER-M07 F25M	0,13	0,18	0,16	0,18
P5	218.20-125ER-M07 F25M	0,13	0,18	0,16	0,18
P6	218.20-125ER-M07 F25M	0,12	0,18	0,16	0,18
P7	218.20-125ER-M07 F25M	0,12	0,18	0,16	0,18
P8	218.20-125ER-M07 F25M	0,13	0,18	0,16	0,18
P11	218.20-125ER-M07 F25M	0,12	0,18	0,16	0,18
M1	218.20-125ER-ME07 F40M	0,14	0,20	0,17	0,20
M2	218.20-125ER-ME07 F40M	0,13	0,18	0,16	0,18
M3	218.20-125ER-ME07 F40M	0,10	0,14	0,13	0,14
M4	218.20-125ER-ME07 F40M	0,090	0,13	0,11	0,13
M5	218.20-125ER-M07 F40M	0,090	0,13	0,11	0,13
K1	218.20-125ER-M07 F25M	—	—	—	—
K2	218.20-125ER-M07 F25M	—	—	—	—
K3	218.20-125ER-M07 F25M	—	—	—	—
K4	218.20-125ER-M07 F25M	—	—	—	—
K5	218.20-125ER-M07 F25M	—	—	—	—
K6	218.20-125ER-M07 F25M	—	—	—	—
K7	218.20-125ER-M07 F25M	—	—	—	—
N1	218.20-125ER-ME07 F40M	0,18	0,24	0,22	0,24
N2	218.20-125ER-ME07 F40M	0,18	0,24	0,22	0,24
N3	218.20-125ER-ME07 F40M	0,18	0,24	0,22	0,24
N11	218.20-125ER-ME07 F40M	0,18	0,24	0,22	0,24
S1	218.20-125ER-ME07 F40M	0,090	0,13	0,11	0,13
S2	218.20-125ER-ME07 F40M	0,090	0,13	0,11	0,13
S3	218.20-125ER-ME07 F40M	0,085	0,12	0,10	0,12
S11	218.20-125ER-ME07 MS2050	0,10	0,14	0,13	0,14
S12	218.20-125ER-ME07 MS2050	0,10	0,14	0,13	0,14
S13	218.20-125ER-ME07 MS2050	0,090	0,13	0,11	0,13
H5	218.20-125ER-M07 F25M	0,090	0,12	0,11	0,12
H8	218.20-125ER-M07 F25M	0,065	0,095	0,085	0,095
H11	218.20-125ER-M07 F25M	0,090	0,12	0,11	0,12
H12	218.20-125ER-M07 F25M	0,090	0,12	0,11	0,12
H21	218.20-125ER-M07 F25M	0,065	0,095	0,085	0,095

SMG = Seco material group
f_z = mm/tooth
v_c= m/min
a_e/D_c = %
All cutting data are start values

R218.20-125 – Insert selection – Semi finishing

SMG		f_z			
		15%	12%	10%	8%
P1	218.20-125ER-ME07 F40M	0,19	0,22	0,22	0,26
P2	218.20-125ER-ME07 F40M	0,20	0,22	0,24	0,26
P3	218.20-125ER-ME07 F40M	0,18	0,20	0,22	0,24
P4	218.20-125ER-M07 F25M	0,18	0,20	0,22	0,24
P5	218.20-125ER-M07 F25M	0,18	0,20	0,22	0,24
P6	218.20-125ER-M07 F25M	0,18	0,19	0,22	0,24
P7	218.20-125ER-M07 F25M	0,18	0,19	0,22	0,24
P8	218.20-125ER-M07 F25M	0,18	0,20	0,22	0,24
P11	218.20-125ER-M07 F25M	0,18	0,19	0,22	0,24
M1	218.20-125ER-ME07 F40M	0,20	0,22	0,24	0,26
M2	218.20-125ER-ME07 F40M	0,18	0,20	0,22	0,24
M3	218.20-125ER-ME07 F40M	0,14	0,16	0,17	0,19
M4	218.20-125ER-ME07 F40M	0,13	0,14	0,15	0,17
M5	218.20-125ER-ME07 F40M	0,13	0,14	0,15	0,17
K1	218.20-125ER-M07 F25M	—	—	—	—
K2	218.20-125ER-M07 F25M	—	—	—	—
K3	218.20-125ER-M07 F25M	—	—	—	—
K4	218.20-125ER-M07 F25M	—	—	—	—
K5	218.20-125ER-M07 F25M	—	—	—	—
K6	218.20-125ER-M07 F25M	—	—	—	—
K7	218.20-125ER-M07 F25M	—	—	—	—
N1	218.20-125ER-ME07 F40M	0,24	0,28	0,30	0,34
N2	218.20-125ER-ME07 F40M	0,24	0,28	0,30	0,34
N3	218.20-125ER-ME07 F40M	0,24	0,28	0,30	0,34
N11	218.20-125ER-ME07 F40M	0,24	0,28	0,30	0,34
S1	218.20-125ER-ME07 F40M	0,13	0,14	0,15	0,17
S2	218.20-125ER-ME07 F40M	0,13	0,14	0,15	0,17
S3	218.20-125ER-ME07 F40M	0,12	0,13	0,14	0,16
S11	218.20-125ER-ME07 MS2050	0,14	0,16	0,17	0,19
S12	218.20-125ER-ME07 MS2050	0,14	0,16	0,17	0,19
S13	218.20-125ER-ME07 MS2050	0,13	0,14	0,15	0,17
H5	218.20-125ER-M07 F25M	0,12	0,14	0,15	0,16
H8	218.20-125ER-M07 F25M	0,095	0,10	0,11	0,12
H11	218.20-125ER-M07 F25M	0,12	0,14	0,15	0,16
H12	218.20-125ER-M07 F25M	0,12	0,14	0,15	0,16
H21	218.20-125ER-M07 F25M	0,095	0,10	0,11	0,12

SMG = Seco material group
f_z = mm/tooth
v_c= m/min
a_e/D_c = %
All cutting data are start values

R218.20-125 – Cutting data v_c = (m/min)

	F25M					F40M					MM4500					MS2050				
SMG	100%	30%	20%	10%	5%	100%	30%	20%	10%	5%	100%	30%	20%	10%	5%	100%	30%	20%	10%	5%
P1	270	395	375	420	455	260	385	370	410	445	210	315	300	335	360	280	335	325	340	365
P2	260	380	365	400	445	255	370	360	390	435	205	300	290	320	350	275	330	320	340	355
P3	230	335	320	350	390	225	325	315	345	380	180	265	255	280	305	230	270	265	285	295
P4	200	295	280	310	340	195	290	275	305	335	160	235	225	245	270	205	240	235	250	260
P5	190	280	270	295	325	190	275	265	290	320	155	225	215	235	260	195	230	225	240	250
P6	220	315	305	330	365	215	310	295	325	360	175	250	240	265	290	210	255	250	265	280
P7	210	300	285	315	345	205	290	280	305	340	165	235	225	250	275	200	240	240	250	265
P8	190	280	270	295	325	190	275	265	290	320	155	225	215	235	260	195	230	225	240	250
P11	200	290	280	305	335	200	285	270	300	330	160	230	220	240	265	195	235	230	245	255
M1	—	—	—	—	—	205	300	290	315	350	180	260	250	275	300	240	290	280	300	310
M2	—	—	—	—	—	170	250	235	260	285	145	215	205	225	245	190	225	220	235	245
M3	—	—	—	—	—	145	200	190	210	230	125	170	165	180	200	125	145	150	150	160
M4	—	—	—	—	—	125	155	150	160	180	110	135	125	140	155	65	95	100	100	105
M5	—	—	—	—	—	105	130	125	135	150	90	110	105	115	130	55	80	80	85	85
K1	—	—	—	—	—	200	295	285	310	345	—	—	—	—	—	—	—	—	—	—
K2	—	—	—	—	—	180	260	250	275	300	—	—	—	—	—	—	—	—	—	—
K3	—	—	—	—	—	150	220	210	235	255	—	—	—	—	—	—	—	—	—	—
K4	—	—	—	—	—	145	210	200	220	245	—	—	—	—	—	—	—	—	—	—
K5	—	—	—	—	—	90	130	125	135	150	—	—	—	—	—	—	—	—	—	—
K6	—	—	—	—	—	125	185	180	195	215	—	—	—	—	—	—	—	—	—	—
K7	—	—	—	—	—	115	165	160	175	190	—	—	—	—	—	—	—	—	—	—
N1	—	—	—	—	—	750	1100	1050	1150	1275	—	—	—	—	—	—	—	—	—	—
N2	—	—	—	—	—	600	900	850	940	1025	—	—	—	—	—	—	—	—	—	—
N3	—	—	—	—	—	400	600	570	620	680	—	—	—	—	—	—	—	—	—	—
N11	—	—	—	—	—	460	680	650	710	780	—	—	—	—	—	—	—	—	—	—
S1	—	—	—	—	—	60	70	70	75	85	33	41	39	43	47	70	75	75	80	85
S2	—	—	—	—	—	47	60	55	60	65	27	33	31	34	38	55	60	60	65	70
S3	—	—	—	—	—	41	50	49	55	60	23	28	28	30	33	50	55	55	55	60
S11	—	—	—	—	—	80	100	95	105	115	45	55	55	60	65	95	105	100	110	115
S12	—	—	—	—	—	46	60	55	60	65	35	44	42	46	50	75	80	80	85	90
S13	—	—	—	—	—	38	47	44	49	55	29	35	34	37	41	60	65	65	70	75
H5	45	60	60	65	70	44	60	60	65	70	—	—	—	—	—	—	—	—	—	—
H8	50	65	65	70	75	50	65	60	70	75	—	—	—	—	—	—	—	—	—	—
H11	60	80	75	85	90	55	75	75	80	90	—	—	—	—	—	—	—	—	—	—
H12	85	120	115	125	140	85	115	110	125	135	—	—	—	—	—	—	—	—	—	—
H21	50	65	65	70	75	50	65	60	70	75	—	—	—	—	—	—	—	—	—	—

R218.20-150 – Insert selection – Roughing

SMG			f_z			
			100%	30%	20%	15%
P1	218.20-150ER-ME07 F40M	SPMT100408T-M08 F40M	0,15	0,16	0,19	0,22
P2	218.20-150ER-ME07 F40M	SPMT100408T-M08 F40M	0,15	0,17	0,19	0,22
P3	218.20-150ER-ME07 F40M	SPMT100408T-M08 F40M	0,15	0,16	0,18	0,20
P4	218.20-150ER-M08 F40M	SPMT100408T-M08 F40M	0,14	0,16	0,18	0,20
P5	218.20-150ER-M08 F40M	SPMT100408T-M08 F40M	0,14	0,15	0,17	0,20
P6	218.20-150ER-M08 F40M	SPMT100408T-M08 F40M	0,14	0,15	0,17	0,19
P7	218.20-150ER-M08 F40M	SPMT100408T-M08 F40M	0,14	0,15	0,17	0,19
P8	218.20-150ER-M08 F40M	SPMT100408T-M08 F40M	0,15	0,16	0,18	0,20
P11	218.20-150ER-M08 F40M	SPMT100408T-M08 F40M	0,14	0,15	0,17	0,19
M1	218.20-150ER-ME07 F40M	SPMT100408T-M08 F40M	0,15	0,17	0,19	0,22
M2	218.20-150ER-ME07 F40M	SPMT100408T-M08 F40M	0,14	0,15	0,17	0,20
M3	218.20-150ER-ME07 F40M	SPMT100408T-M08 F40M	0,12	0,13	0,15	0,17
M4	218.20-150ER-ME07 F40M	SPMT100408T-M08 F40M	0,12	0,13	0,15	0,16
M5	218.20-150ER-M08 F40M	SPMT100408T-M08 F40M	0,12	0,13	0,15	0,16
K1	218.20-150ER-M08 F40M	SPMT100408T-M08 F40M	0,15	0,17	0,19	0,22
K2	218.20-150ER-M08 F40M	SPMT100408T-M08 F40M	0,14	0,15	0,17	0,20
K3	218.20-150ER-M08 F40M	SPMT100408T-M08 F40M	0,14	0,15	0,17	0,20
K4	218.20-150ER-M08 F40M	SPMT100408T-M08 F40M	0,14	0,15	0,17	0,20
K5	218.20-150ER-M08 F40M	SPMT100408T-M08 F40M	0,13	0,14	0,16	0,18
K6	218.20-150ER-M08 F40M	SPMT100408T-M08 F40M	0,14	0,15	0,17	0,20
K7	218.20-150ER-M08 F40M	SPMT100408T-M08 F40M	0,13	0,14	0,16	0,18
N1	218.20-150ER-ME07 F40M	SPMT100408T-M08 F40M	0,20	0,22	0,24	0,28
N2	218.20-150ER-ME07 F40M	SPMT100408T-M08 F40M	0,20	0,22	0,24	0,28
N3	218.20-150ER-ME07 F40M	SPMT100408T-M08 F40M	0,20	0,22	0,24	0,28
N11	218.20-150ER-ME07 F40M	SPMT100408T-M08 F40M	0,20	0,22	0,24	0,28
S1	218.20-150ER-ME07 F40M	SPMT100408T-M08 F40M	0,12	0,13	0,15	0,16
S2	218.20-150ER-ME07 F40M	SPMT100408T-M08 F40M	0,12	0,13	0,15	0,16
S3	218.20-150ER-ME07 F40M	SPMT100408T-M08 F40M	0,11	0,12	0,13	0,15
S11	218.20-150ER-ME07 MS2050	SPMT100408T-M08 F40M	0,090	0,095	0,11	0,12
S12	218.20-150ER-ME07 MS2050	SPMT100408T-M08 F40M	0,090	0,095	0,11	0,12
S13	218.20-150ER-ME07 MS2050	SPMT100408T-M08 F40M	0,080	0,090	0,10	0,11

SMG = Seco material group
f_z = mm/tooth
v_c= m/min
a_e/D_c = %
All cutting data are start values

R218.20-150 – Insert selection – Semi finishing

SMG			f_z			
			15%	12%	10%	8%
P1	218.20-150ER-ME07 F40M	SPMT100408T-M08 F40M	0,22	0,24	0,26	0,28
P2	218.20-150ER-ME07 F40M	SPMT100408T-M08 F40M	0,22	0,24	0,26	0,28
P3	218.20-150ER-ME07 F40M	SPMT100408T-M08 F40M	0,20	0,22	0,24	0,28
P4	218.20-150ER-M08 F40M	SPMT100408T-M08 F40M	0,20	0,22	0,24	0,26
P5	218.20-150ER-M08 F40M	SPMT100408T-M08 F40M	0,20	0,22	0,24	0,26
P6	218.20-150ER-M08 F40M	SPMT100408T-M08 F40M	0,19	0,22	0,24	0,26
P7	218.20-150ER-M08 F40M	SPMT100408T-M08 F40M	0,19	0,22	0,24	0,26
P8	218.20-150ER-M08 F40M	SPMT100408T-M08 F40M	0,20	0,22	0,24	0,28
P11	218.20-150ER-M08 F40M	SPMT100408T-M08 F40M	0,19	0,22	0,24	0,26
M1	218.20-150ER-ME07 F40M	SPMT100408T-M08 F40M	0,22	0,24	0,26	0,28
M2	218.20-150ER-ME07 F40M	SPMT100408T-M08 F40M	0,20	0,22	0,24	0,26
M3	218.20-150ER-ME07 F40M	SPMT100408T-M08 F40M	0,17	0,18	0,20	0,22
M4	218.20-150ER-ME07 F40M	SPMT100408T-M08 F40M	0,16	0,18	0,19	0,22
M5	218.20-150ER-ME07 F40M	SPMT100408T-M08 F40M	0,16	0,18	0,19	0,22
K1	218.20-150ER-M08 F40M	SPMT100408T-M08 F40M	0,22	0,24	0,26	0,28
K2	218.20-150ER-M08 F40M	SPMT100408T-M08 F40M	0,20	0,22	0,24	0,26
K3	218.20-150ER-M08 F40M	SPMT100408T-M08 F40M	0,20	0,22	0,24	0,26
K4	218.20-150ER-M08 F40M	SPMT100408T-M08 F40M	0,20	0,22	0,24	0,26
K5	218.20-150ER-M08 F40M	SPMT100408T-M08 F40M	0,18	0,19	0,22	0,24
K6	218.20-150ER-M08 F40M	SPMT100408T-M08 F40M	0,20	0,22	0,24	0,26
K7	218.20-150ER-M08 F40M	SPMT100408T-M08 F40M	0,18	0,19	0,22	0,24
N1	218.20-150ER-ME07 F40M	SPMT100408T-M08 F40M	0,28	0,30	0,32	0,36
N2	218.20-150ER-ME07 F40M	SPMT100408T-M08 F40M	0,28	0,30	0,32	0,36
N3	218.20-150ER-ME07 F40M	SPMT100408T-M08 F40M	0,28	0,30	0,32	0,36
N11	218.20-150ER-ME07 F40M	SPMT100408T-M08 F40M	0,28	0,30	0,32	0,36
S1	218.20-150ER-ME07 F40M	SPMT100408T-M08 F40M	0,16	0,18	0,19	0,22
S2	218.20-150ER-ME07 F40M	SPMT100408T-M08 F40M	0,16	0,18	0,19	0,22
S3	218.20-150ER-ME07 F40M	SPMT100408T-M08 F40M	0,15	0,17	0,18	0,20
S11	218.20-150ER-ME07 MS2050	SPMT100408T-M08 F40M	0,12	0,14	0,15	0,16
S12	218.20-150ER-ME07 MS2050	SPMT100408T-M08 F40M	0,12	0,14	0,15	0,16
S13	218.20-150ER-ME07 MS2050	SPMT100408T-M08 F40M	0,11	0,13	0,14	0,15

SMG = Seco material group
f_z = mm/tooth
v_c= m/min
a_e/D_c = %
All cutting data are start values

R218.20-150 – Cutting data v_c = (m/min)

	F40M					MM4500					MS2050				
SMG	100%	30%	20%	10%	5%	100%	30%	20%	10%	5%	100%	30%	20%	10%	5%
P1	230	335	325	360	390	175	255	245	275	295	265	320	315	325	350
P2	220	325	315	345	380	170	250	240	260	290	260	310	305	330	345
P3	195	285	270	300	330	145	220	205	230	250	220	260	255	275	285
P4	175	250	245	270	295	130	190	185	205	225	195	230	225	240	250
P5	165	240	235	255	280	125	185	180	195	215	180	220	215	220	240
P6	185	275	260	290	315	140	210	200	220	240	205	240	235	245	260
P7	175	260	245	270	295	135	200	190	205	225	195	225	220	230	245
P8	160	240	230	250	275	125	185	175	190	210	185	220	215	230	240
P11	170	250	240	265	290	130	195	185	200	220	185	220	215	225	240
M1	180	260	255	275	305	145	215	205	225	250	230	275	270	290	300
M2	150	215	210	230	250	120	175	170	190	205	180	215	210	215	235
M3	130	175	170	185	205	105	145	135	150	165	120	140	135	145	155
M4	110	135	130	145	155	90	110	105	120	130	65	95	95	100	100
M5	95	115	110	120	130	75	90	90	100	105	55	75	80	80	85
K1	175	260	250	270	300	—	—	—	—	—	—	—	—	—	—
K2	155	230	220	245	265	—	—	—	—	—	—	—	—	—	—
K3	135	195	185	205	225	—	—	—	—	—	—	—	—	—	—
K4	125	185	180	195	215	—	—	—	—	—	—	—	—	—	—
K5	80	115	110	120	130	—	—	—	—	—	—	—	—	—	—
K6	110	160	155	175	190	—	—	—	—	—	—	—	—	—	—
K7	100	145	140	155	170	—	—	—	—	—	—	—	—	—	—
N1	660	950	910	1000	1100	—	—	—	—	—	—	—	—	—	—
N2	530	770	730	820	890	—	—	—	—	—	—	—	—	—	—
N3	355	510	490	540	590	—	—	—	—	—	—	—	—	—	—
N11	405	580	560	620	680	—	—	—	—	—	—	—	—	—	—
S1	50	65	60	70	75	28	34	32	36	39	70	75	70	75	80
S2	42	50	49	55	60	22	27	26	29	31	55	60	55	60	65
S3	37	45	43	48	50	20	24	23	25	28	47	55	50	55	60
S11	70	90	85	95	105	37	47	45	50	55	90	100	100	105	110
S12	41	50	49	55	60	29	36	35	39	42	70	80	75	80	85
S13	34	41	39	44	47	24	29	28	31	34	60	65	60	65	70
H5	40	55	50	55	65	—	—	—	—	—	—	—	—	—	—
H8	45	55	55	60	65	—	—	—	—	—	—	—	—	—	—
H11	50	70	65	75	80	—	—	—	—	—	—	—	—	—	—
H12	75	105	100	110	120	—	—	—	—	—	—	—	—	—	—
H21	45	55	55	60	65	—	—	—	—	—	—	—	—	—	—

R218.20-160 – Insert selection – Roughing

SMG			f_z			
			100%	30%	20%	15%
P1	218.20-160ER-ME08 F40M	SPMT100408T-M08 F40M	0,14	0,15	0,18	0,20
P2	218.20-160ER-ME08 F40M	SPMT100408T-M08 F40M	0,14	0,16	0,18	0,20
P3	218.20-160ER-ME08 F40M	SPMT100408T-M08 F40M	0,14	0,15	0,17	0,19
P4	218.20-160ER-M08 F25M	SPMT100408T-M08 F25M	0,13	0,14	0,17	0,19
P5	218.20-160ER-M08 F25M	SPMT100408T-M08 F25M	0,13	0,14	0,16	0,18
P6	218.20-160ER-M08 F25M	SPMT100408T-M08 F25M	0,13	0,14	0,16	0,18
P7	218.20-160ER-M08 F25M	SPMT100408T-M08 F25M	0,13	0,14	0,16	0,18
P8	218.20-160ER-M08 F25M	SPMT100408T-M08 F25M	0,14	0,15	0,17	0,19
P11	218.20-160ER-M08 F25M	SPMT100408T-M08 F25M	0,13	0,14	0,16	0,18
M1	218.20-160ER-ME08 F40M	SPMT100408T-M08 F40M	0,14	0,16	0,18	0,20
M2	218.20-160ER-ME08 F40M	SPMT100408T-M08 F40M	0,13	0,14	0,16	0,18
M3	218.20-160ER-ME08 F40M	SPMT100408T-M08 F40M	0,11	0,12	0,14	0,15
M4	218.20-160ER-ME08 F40M	SPMT100408T-M08 F40M	0,11	0,12	0,13	0,15
M5	218.20-160ER-M08 F40M	SPMT100408T-M08 F40M	0,11	0,12	0,13	0,15
K1	218.20-160ER-M08 F25M	SPMT100408T-M08 F25M	0,14	0,16	0,18	0,20
K2	218.20-160ER-M08 F25M	SPMT100408T-M08 F25M	0,13	0,14	0,16	0,18
K3	218.20-160ER-M08 F25M	SPMT100408T-M08 F25M	0,13	0,14	0,16	0,18
K4	218.20-160ER-M08 F25M	SPMT100408T-M08 F25M	0,13	0,14	0,16	0,18
K5	218.20-160ER-M08 F25M	SPMT100408T-M08 F25M	0,12	0,13	0,15	0,16
K6	218.20-160ER-M08 F25M	SPMT100408T-M08 F25M	0,13	0,14	0,16	0,18
K7	218.20-160ER-M08 F25M	SPMT100408T-M08 F25M	0,12	0,13	0,15	0,16
N1	218.20-160ER-ME08 F40M	SPMT100408T-M08 F25M	0,18	0,20	0,22	0,26
N2	218.20-160ER-ME08 F40M	SPMT100408T-M08 F25M	0,18	0,20	0,22	0,26
N3	218.20-160ER-ME08 F40M	SPMT100408T-M08 F25M	0,18	0,20	0,22	0,26
N11	218.20-160ER-ME08 F40M	SPMT100408T-M08 F25M	0,18	0,20	0,22	0,26
S1	218.20-160ER-ME08 F40M	SPMT100408T-M08 F40M	0,11	0,12	0,13	0,15
S2	218.20-160ER-ME08 F40M	SPMT100408T-M08 F40M	0,11	0,12	0,13	0,15
S3	218.20-160ER-ME08 F40M	SPMT100408T-M08 F40M	0,10	0,11	0,12	0,14
S11	218.20-160ER-ME08 MS2050	SPMT100408T-M08 F40M	0,090	0,10	0,11	0,13
S12	218.20-160ER-ME08 MS2050	SPMT100408T-M08 F40M	0,090	0,10	0,11	0,13
S13	218.20-160ER-ME08 MS2050	SPMT100408T-M08 F40M	0,085	0,095	0,11	0,12
H5	218.20-160ER-M08 F25M	SPMT100408T-M08 F25M	0,095	0,10	0,12	0,13
H8	218.20-160ER-M08 F25M	SPMT100408T-M08 F25M	0,075	0,080	0,090	0,10
H11	218.20-160ER-M08 F25M	SPMT100408T-M08 F25M	0,095	0,10	0,12	0,13
H12	218.20-160ER-M08 F25M	SPMT100408T-M08 F25M	0,095	0,10	0,12	0,13
H21	218.20-160ER-M08 F25M	SPMT100408T-M08 F25M	0,075	0,080	0,090	0,10

SMG = Seco material group
f_z = mm/tooth
v_c= m/min
a_e/D_c = %
All cutting data are start values

R218.20-160 – Insert selection – Semi finishing

SMG			f_z			
			15%	12%	10%	8%
P1	218.20-160ER-ME08 F40M	SPMT100408T-M08 F40M	0,20	0,22	0,24	0,26
P2	218.20-160ER-ME08 F40M	SPMT100408T-M08 F40M	0,20	0,22	0,24	0,26
P3	218.20-160ER-ME08 F40M	SPMT100408T-M08 F40M	0,19	0,20	0,22	0,26
P4	218.20-160ER-M08 F25M	SPMT100408T-M08 F40M	0,19	0,20	0,22	0,24
P5	218.20-160ER-M08 F25M	SPMT100408T-M08 F40M	0,18	0,20	0,22	0,24
P6	218.20-160ER-M08 F25M	SPMT100408T-M08 F40M	0,18	0,20	0,22	0,24
P7	218.20-160ER-M08 F25M	SPMT100408T-M08 F40M	0,18	0,20	0,22	0,24
P8	218.20-160ER-M08 F25M	SPMT100408T-M08 F40M	0,19	0,20	0,22	0,26
P11	218.20-160ER-M08 F25M	SPMT100408T-M08 F40M	0,18	0,20	0,22	0,24
M1	218.20-160ER-ME08 F40M	SPMT100408T-M08 F40M	0,20	0,22	0,24	0,26
M2	218.20-160ER-ME08 F40M	SPMT100408T-M08 F40M	0,18	0,20	0,22	0,24
M3	218.20-160ER-ME08 F40M	SPMT100408T-M08 F40M	0,15	0,17	0,18	0,20
M4	218.20-160ER-ME08 F40M	SPMT100408T-M08 F40M	0,15	0,16	0,18	0,20
M5	218.20-160ER-ME08 F40M	SPMT100408T-M08 F40M	0,15	0,16	0,18	0,20
K1	218.20-160ER-M08 F25M	SPMT100408T-M08 F40M	0,20	0,22	0,24	0,26
K2	218.20-160ER-M08 F25M	SPMT100408T-M08 F40M	0,18	0,20	0,22	0,24
K3	218.20-160ER-M08 F25M	SPMT100408T-M08 F40M	0,18	0,20	0,22	0,24
K4	218.20-160ER-M08 F25M	SPMT100408T-M08 F40M	0,18	0,20	0,22	0,24
K5	218.20-160ER-M08 F25M	SPMT100408T-M08 F40M	0,16	0,18	0,20	0,22
K6	218.20-160ER-M08 F25M	SPMT100408T-M08 F40M	0,18	0,20	0,22	0,24
K7	218.20-160ER-M08 F25M	SPMT100408T-M08 F40M	0,16	0,18	0,20	0,22
N1	218.20-160ER-ME08 F40M	SPMT100408T-M08 F40M	0,26	0,28	0,30	0,34
N2	218.20-160ER-ME08 F40M	SPMT100408T-M08 F40M	0,26	0,28	0,30	0,34
N3	218.20-160ER-ME08 F40M	SPMT100408T-M08 F40M	0,26	0,28	0,30	0,34
N11	218.20-160ER-ME08 F40M	SPMT100408T-M08 F40M	0,26	0,28	0,30	0,34
S1	218.20-160ER-ME08 F40M	SPMT100408T-M08 F40M	0,15	0,16	0,18	0,20
S2	218.20-160ER-ME08 F40M	SPMT100408T-M08 F40M	0,15	0,16	0,18	0,20
S3	218.20-160ER-ME08 F40M	SPMT100408T-M08 F40M	0,14	0,15	0,17	0,18
S11	218.20-160ER-ME08 MS2050	SPMT100408T-M08 F40M	0,13	0,14	0,15	0,17
S12	218.20-160ER-ME08 MS2050	SPMT100408T-M08 F40M	0,13	0,14	0,15	0,17
S13	218.20-160ER-ME08 MS2050	SPMT100408T-M08 F40M	0,12	0,13	0,14	0,16
H5	218.20-160ER-M08 F25M	SPMT100408T-M08 F40M	0,13	0,14	0,16	0,17
H8	218.20-160ER-M08 F25M	SPMT100408T-M08 F40M	0,10	0,11	0,12	0,14
H11	218.20-160ER-M08 F25M	SPMT100408T-M08 F40M	0,13	0,14	0,16	0,17
H12	218.20-160ER-M08 F25M	SPMT100408T-M08 F40M	0,13	0,14	0,16	0,17
H21	218.20-160ER-M08 F25M	SPMT100408T-M08 F40M	0,10	0,11	0,12	0,14

SMG = Seco material group
f_z = mm/tooth
v_c= m/min
a_e/D_c = %
All cutting data are start values

R218.20-160 – Cutting data v_c = (m/min)

	F25M					F40M					MM4500					MS2050				
SMG	100%	30%	20%	10%	5%	100%	30%	20%	10%	5%	100%	30%	20%	10%	5%	100%	30%	20%	10%	5%
P1	240	345	335	370	405	230	335	325	360	390	185	270	260	290	315	270	340	330	350	370
P2	230	335	325	355	390	220	325	315	345	380	180	265	255	280	305	265	330	325	340	360
P3	200	295	280	310	340	195	285	270	300	330	155	230	220	245	265	230	275	275	285	305
P4	180	260	255	280	305	175	250	245	270	295	140	205	200	220	240	200	240	240	250	265
P5	170	250	240	265	290	165	240	235	255	280	135	195	190	210	230	190	230	225	240	255
P6	190	285	270	300	325	185	275	260	290	315	150	225	210	235	255	215	260	255	265	285
P7	180	270	255	280	310	175	260	245	270	300	140	210	200	220	240	200	245	240	250	270
P8	170	250	235	260	285	165	240	230	250	275	130	195	185	205	225	190	230	230	240	255
P11	175	260	250	275	300	170	255	240	265	290	140	205	195	215	235	195	235	235	245	260
M1	—	—	—	—	—	180	260	255	275	305	155	225	220	240	265	235	290	285	295	315
M2	—	—	—	—	—	150	215	210	230	255	130	185	180	200	220	185	225	220	235	250
M3	—	—	—	—	—	135	175	170	185	205	115	150	145	160	175	130	155	150	155	165
M4	—	—	—	—	—	115	135	130	145	155	100	115	110	125	135	70	105	105	110	115
M5	—	—	—	—	—	95	115	110	120	130	80	100	95	105	115	60	90	90	90	95
K1	—	—	—	—	—	175	260	250	270	300	—	—	—	—	—	—	—	—	—	—
K2	—	—	—	—	—	155	230	220	245	265	—	—	—	—	—	—	—	—	—	—
K3	—	—	—	—	—	135	195	185	205	225	—	—	—	—	—	—	—	—	—	—
K4	—	—	—	—	—	125	185	180	195	215	—	—	—	—	—	—	—	—	—	—
K5	—	—	—	—	—	80	115	110	120	130	—	—	—	—	—	—	—	—	—	—
K6	—	—	—	—	—	110	160	160	175	190	—	—	—	—	—	—	—	—	—	—
K7	—	—	—	—	—	100	145	140	155	170	—	—	—	—	—	—	—	—	—	—
N1	—	—	—	—	—	660	950	910	1025	1100	—	—	—	—	—	—	—	—	—	—
N2	—	—	—	—	—	530	770	730	820	890	—	—	—	—	—	—	—	—	—	—
N3	—	—	—	—	—	355	510	490	550	590	—	—	—	—	—	—	—	—	—	—
N11	—	—	—	—	—	405	580	560	620	680	—	—	—	—	—	—	—	—	—	—
S1	—	—	—	—	—	55	65	60	70	75	30	36	34	39	41	65	70	65	75	80
S2	—	—	—	—	—	43	50	49	55	60	24	29	28	31	33	55	55	55	60	65
S3	—	—	—	—	—	37	45	43	48	50	21	26	24	27	29	47	50	48	50	55
S11	—	—	—	—	—	70	90	85	95	105	39	50	48	55	60	85	95	95	100	110
S12	—	—	—	—	—	40	50	49	55	60	30	39	37	41	45	65	75	75	80	85
S13	—	—	—	—	—	34	41	39	44	47	26	31	30	33	36	60	60	60	65	65
H5	42	55	55	60	65	41	55	50	55	65	—	—	—	—	—	—	—	—	—	—
H8	46	60	55	60	70	45	55	55	60	65	—	—	—	—	—	—	—	—	—	—
H11	55	70	70	75	85	50	70	65	75	80	—	—	—	—	—	—	—	—	—	—
H12	80	105	105	115	125	80	105	100	110	120	—	—	—	—	—	—	—	—	—	—
H21	46	60	55	60	70	45	55	55	60	65	—	—	—	—	—	—	—	—	—	—

R218.20-200 – Insert selection – Roughing

SMG			f_z			
			100%	30%	20%	15%
P1	218.20-200ER-ME10 F40M	SCET120612T-M14 T350M	0,20	0,22	0,26	0,28
P2	218.20-200ER-ME10 F40M	SCET120612T-M14 T350M	0,20	0,22	0,26	0,28
P3	218.20-200ER-ME10 F40M	SCET120612T-M14 T350M	0,19	0,22	0,24	0,28
P4	218.20-200ER-M10 F40M	SCET120612T-M11 MP2500	0,19	0,20	0,24	0,26
P5	218.20-200ER-M10 F40M	SCET120612T-M11 MP2500	0,19	0,20	0,24	0,26
P6	218.20-200ER-M10 F40M	SCET120612T-M11 MP2500	0,18	0,20	0,24	0,26
P7	218.20-200ER-M10 F40M	SCET120612T-M11 MP2500	0,18	0,20	0,24	0,26
P8	218.20-200ER-M10 F40M	SCET120612T-M11 MP2500	0,19	0,22	0,24	0,28
P11	218.20-200ER-M10 F40M	SCET120612T-M11 MP2500	0,18	0,20	0,24	0,26
M1	218.20-200ER-ME10 F40M	SCET120612T-M14 T350M	0,20	0,22	0,26	0,28
M2	218.20-200ER-ME10 F40M	SCET120612T-M14 T350M	0,19	0,20	0,24	0,26
M3	218.20-200ER-ME10 F40M	SCET120612T-M14 T350M	0,16	0,17	0,20	0,22
M4	218.20-200ER-ME10 F40M	SCET120612T-M14 T350M	0,15	0,17	0,19	0,22
M5	218.20-200ER-M10 F40M	SCET120612T-M14 T350M	0,15	0,17	0,19	0,22
N1	218.20-200ER-ME10 F40M	SCET120612T-M11 F40M	0,26	0,28	0,32	0,36
N2	218.20-200ER-ME10 F40M	SCET120612T-M11 F40M	0,26	0,28	0,32	0,36
N3	218.20-200ER-ME10 F40M	SCET120612T-M11 F40M	0,26	0,28	0,32	0,36
N11	218.20-200ER-ME10 F40M	SCET120612T-M11 F40M	0,26	0,28	0,32	0,36
S1	218.20-200ER-ME10 F40M	SCET120612T-M14 T350M	0,15	0,17	0,19	0,22
S2	218.20-200ER-ME10 F40M	SCET120612T-M14 T350M	0,15	0,17	0,19	0,22
S3	218.20-200ER-ME10 F40M	SCET120612T-M14 T350M	0,14	0,16	0,18	0,20
S11	218.20-200ER-ME10 MS2050	SCET120612T-M14 MS2050	0,12	0,13	0,15	0,17
S12	218.20-200ER-ME10 MS2050	SCET120612T-M14 MS2050	0,12	0,13	0,15	0,17
S13	218.20-200ER-ME10 MS2050	SCET120612T-M14 MS2050	0,11	0,12	0,14	0,15

SMG = Seco material group
f_z = mm/tooth
v_c= m/min
a_e/D_c = %
All cutting data are start values

R218.20-200 – Insert selection – Semi finishing

SMG			f_z			
			15%	12%	10%	8%
P1	218.20-200ER-ME10 F40M	SCET120612T-M14 T350M	0,28	0,32	0,34	0,38
P2	218.20-200ER-ME10 F40M	SCET120612T-M14 T350M	0,28	0,32	0,34	0,38
P3	218.20-200ER-ME10 F40M	SCET120612T-M14 T350M	0,28	0,30	0,32	0,36
P4	218.20-200ER-M10 F40M	SCET120612T-M11 MP2500	0,26	0,30	0,32	0,36
P5	218.20-200ER-M10 F40M	SCET120612T-M11 MP2500	0,26	0,28	0,32	0,34
P6	218.20-200ER-M10 F40M	SCET120612T-M11 MP2500	0,26	0,28	0,32	0,34
P7	218.20-200ER-M10 F40M	SCET120612T-M11 MP2500	0,26	0,28	0,32	0,34
P8	218.20-200ER-M10 F40M	SCET120612T-M11 MP2500	0,28	0,30	0,32	0,36
P11	218.20-200ER-M10 F40M	SCET120612T-M11 MP2500	0,26	0,28	0,32	0,34
M1	218.20-200ER-ME10 F40M	SCET120612T-M14 T350M	0,28	0,32	0,34	0,38
M2	218.20-200ER-ME10 F40M	SCET120612T-M14 T350M	0,26	0,28	0,32	0,34
M3	218.20-200ER-ME10 F40M	SCET120612T-M14 T350M	0,22	0,24	0,26	0,30
M4	218.20-200ER-ME10 F40M	SCET120612T-M14 T350M	0,22	0,24	0,26	0,28
M5	218.20-200ER-ME10 F40M	SCET120612T-M14 T350M	0,22	0,24	0,26	0,28
N1	218.20-200ER-ME10 F40M	SCET120612T-M14 F40M	0,36	0,40	0,44	0,48
N2	218.20-200ER-ME10 F40M	SCET120612T-M14 F40M	0,36	0,40	0,44	0,48
N3	218.20-200ER-ME10 F40M	SCET120612T-M14 F40M	0,36	0,40	0,44	0,48
N11	218.20-200ER-ME10 F40M	SCET120612T-M14 F40M	0,36	0,40	0,44	0,48
S1	218.20-200ER-ME10 F40M	SCET120612T-M14 T350M	0,22	0,24	0,26	0,28
S2	218.20-200ER-ME10 F40M	SCET120612T-M14 T350M	0,22	0,24	0,26	0,28
S3	218.20-200ER-ME10 F40M	SCET120612T-M14 T350M	0,20	0,22	0,24	0,26
S11	218.20-200ER-ME10 MS2050	SCET120612T-M14 MS2050	0,17	0,18	0,20	0,22
S12	218.20-200ER-ME10 MS2050	SCET120612T-M14 MS2050	0,17	0,18	0,20	0,22
S13	218.20-200ER-ME10 MS2050	SCET120612T-M14 MS2050	0,15	0,17	0,18	0,20

SMG = Seco material group
f_z = mm/tooth
v_c= m/min
a_e/D_c = %
All cutting data are start values

R218.20-200 – Cutting data v_c = (m/min)

SMG	F40M					MM4500					MS2050				
	100%	30%	20%	10%	5%	100%	30%	20%	10%	5%	100%	30%	20%	10%	5%
P1	205	305	295	325	355	165	250	240	260	285	275	355	340	365	390
P2	200	300	285	315	345	165	240	230	255	280	265	345	335	355	380
P3	175	260	250	275	305	145	210	205	225	245	230	295	285	305	325
P4	155	230	220	240	265	125	185	180	195	215	205	260	250	265	285
P5	150	220	210	235	255	120	180	170	190	205	195	245	240	255	270
P6	170	245	235	265	285	140	200	190	215	230	220	275	270	285	305
P7	160	235	225	250	270	130	190	180	200	220	205	260	255	270	285
P8	150	220	210	230	255	120	180	170	185	205	195	245	240	255	275
P11	155	225	215	240	260	125	185	175	195	210	200	250	245	260	280
M1	160	240	230	255	275	140	210	200	220	240	230	300	290	310	330
M2	135	200	190	210	230	115	170	165	180	200	190	240	235	250	265
M3	120	160	155	170	185	105	140	130	145	160	145	170	170	180	190
M4	105	125	120	130	145	90	110	105	115	125	90	125	120	130	135
M5	85	105	100	110	120	75	90	85	95	105	75	105	100	105	110
N1	580	860	820	910	990	—	—	—	—	—	—	—	—	—	—
N2	465	690	670	730	800	—	—	—	—	—	—	—	—	—	—
N3	310	465	445	490	530	—	—	—	—	—	—	—	—	—	—
N11	355	530	510	560	610	—	—	—	—	—	—	—	—	—	—
S1	49	60	55	60	70	27	33	32	35	38	60	65	60	65	70
S2	39	48	45	50	55	22	27	26	28	31	49	50	50	55	60
S3	34	42	40	44	48	19	24	23	25	27	44	47	44	48	50
S11	65	80	75	85	95	37	46	44	49	55	75	85	85	90	95
S12	37	47	45	50	55	28	36	34	38	41	60	65	65	70	75
S13	31	38	36	40	44	24	29	27	30	33	55	55	55	55	60

R218.20-250 – Insert selection – Roughing

SMG			f_z			
			100%	30%	20%	15%
P1	218.20-250ER-ME12 F40M	SCET120612T-M14 T350M	0,18	0,19	0,22	0,24
P2	218.20-250ER-ME12 F40M	SCET120612T-M14 T350M	0,18	0,20	0,22	0,26
P3	218.20-250ER-ME12 F40M	SCET120612T-M14 T350M	0,17	0,18	0,22	0,24
P4	218.20-250TR-M14 F40M	SCET120612T-M11 MP2500	0,19	0,22	0,24	0,28
P5	218.20-250TR-M14 F40M	SCET120612T-M11 MP2500	0,19	0,20	0,24	0,26
P6	218.20-250TR-M14 F40M	SCET120612T-M11 MP2500	0,19	0,20	0,24	0,26
P7	218.20-250TR-M14 F40M	SCET120612T-M11 MP2500	0,19	0,20	0,24	0,26
P8	218.20-250TR-M14 F40M	SCET120612T-M11 MP2500	0,20	0,22	0,24	0,28
P11	218.20-250TR-M14 F40M	SCET120612T-M11 MP2500	0,19	0,20	0,24	0,26
M1	218.20-250ER-ME12 F40M	SCET120612T-M14 T350M	0,18	0,20	0,22	0,26
M2	218.20-250ER-ME12 F40M	SCET120612T-M14 T350M	0,16	0,18	0,20	0,22
M3	218.20-250ER-ME12 F40M	SCET120612T-M14 T350M	0,14	0,15	0,17	0,19
M4	218.20-250ER-ME12 F40M	SCET120612T-M14 T350M	0,14	0,15	0,17	0,19
M5	218.20-250TR-M14 F40M	SCET120612T-M14 T350M	0,16	0,18	0,20	0,22
N1	218.20-250ER-ME12 F40M	SCET120612T-M11 F40M	0,22	0,24	0,28	0,32
N2	218.20-250ER-ME12 F40M	SCET120612T-M11 F40M	0,22	0,24	0,28	0,32
N3	218.20-250ER-ME12 F40M	SCET120612T-M11 F40M	0,22	0,24	0,28	0,32
N11	218.20-250ER-ME12 F40M	SCET120612T-M11 F40M	0,22	0,24	0,28	0,32
S1	218.20-250ER-ME12 F40M	SCET120612T-M14 T350M	0,14	0,15	0,17	0,19
S2	218.20-250ER-ME12 F40M	SCET120612T-M14 T350M	0,14	0,15	0,17	0,19
S3	218.20-250ER-ME12 F40M	SCET120612T-M14 T350M	0,13	0,14	0,16	0,18
S11	218.20-250ER-ME12 MS2050	SCET120612T-M14 MS2050	0,15	0,16	0,18	0,20
S12	218.20-250ER-ME12 MS2050	SCET120612T-M14 MS2050	0,15	0,16	0,18	0,20
S13	218.20-250ER-ME12 MS2050	SCET120612T-M14 MS2050	0,14	0,15	0,17	0,19

SMG = Seco material group
f_z = mm/tooth
v_c= m/min
a_e/D_c = %
All cutting data are start values

R218.20-250 – Insert selection – Semi finishing

SMG			f_z			
			15%	12%	10%	8%
P1	218.20-250ER-ME12 F40M	SCET120612T-M14 T350M	0,24	0,28	0,30	0,32
P2	218.20-250ER-ME12 F40M	SCET120612T-M14 T350M	0,26	0,28	0,30	0,34
P3	218.20-250ER-ME12 F40M	SCET120612T-M14 T350M	0,24	0,26	0,28	0,32
P4	218.20-250TR-M14 F40M	SCET120612T-M11 MP2500	0,28	0,30	0,32	0,36
P5	218.20-250TR-M14 F40M	SCET120612T-M11 MP2500	0,26	0,30	0,32	0,36
P6	218.20-250TR-M14 F40M	SCET120612T-M11 MP2500	0,26	0,30	0,32	0,34
P7	218.20-250TR-M14 F40M	SCET120612T-M11 MP2500	0,26	0,30	0,32	0,34
P8	218.20-250TR-M14 F40M	SCET120612T-M11 MP2500	0,28	0,30	0,34	0,36
P11	218.20-250TR-M14 F40M	SCET120612T-M11 MP2500	0,26	0,30	0,32	0,34
M1	218.20-250ER-ME12 F40M	SCET120612T-M14 T350M	0,26	0,28	0,30	0,34
M2	218.20-250ER-ME12 F40M	SCET120612T-M14 T350M	0,22	0,26	0,28	0,30
M3	218.20-250ER-ME12 F40M	SCET120612T-M14 T350M	0,19	0,22	0,24	0,26
M4	218.20-250ER-ME12 F40M	SCET120612T-M14 T350M	0,19	0,22	0,24	0,26
M5	218.20-250ER-ME12 F40M	SCET120612T-M14 T350M	0,19	0,22	0,24	0,26
N1	218.20-250ER-ME12 F40M	SCET120612T-M14 F40M	0,32	0,36	0,38	0,42
N2	218.20-250ER-ME12 F40M	SCET120612T-M14 F40M	0,32	0,36	0,38	0,42
N3	218.20-250ER-ME12 F40M	SCET120612T-M14 F40M	0,32	0,36	0,38	0,42
N11	218.20-250ER-ME12 F40M	SCET120612T-M14 F40M	0,32	0,36	0,38	0,42
S1	218.20-250ER-ME12 F40M	SCET120612T-M14 T350M	0,19	0,22	0,24	0,26
S2	218.20-250ER-ME12 F40M	SCET120612T-M14 T350M	0,19	0,22	0,24	0,26
S3	218.20-250ER-ME12 F40M	SCET120612T-M14 T350M	0,18	0,20	0,22	0,24
S11	218.20-250ER-ME12 MS2050	SCET120612T-M14 MS2050	0,20	0,22	0,24	0,28
S12	218.20-250ER-ME12 MS2050	SCET120612T-M14 MS2050	0,20	0,22	0,24	0,28
S13	218.20-250ER-ME12 MS2050	SCET120612T-M14 MS2050	0,19	0,22	0,24	0,26

SMG = Seco material group
f_z = mm/tooth
v_c= m/min
a_e/D_c = %
All cutting data are start values

R218.20-250 – Cutting data v_c = (m/min)

SMG	F40M					MM4500					MS2050				
	100%	30%	20%	10%	5%	100%	30%	20%	10%	5%	100%	30%	20%	10%	5%
P1	210	315	300	330	365	170	255	245	265	295	250	325	320	340	360
P2	205	300	290	320	350	165	245	235	260	285	245	320	310	330	355
P3	180	265	250	280	305	145	215	205	230	250	210	275	265	285	305
P4	155	235	225	250	275	125	190	185	200	220	185	240	235	250	265
P5	155	230	215	235	260	125	185	175	190	210	180	230	225	240	255
P6	170	255	245	270	295	140	205	195	220	240	200	255	250	265	285
P7	160	240	230	255	275	130	195	185	205	225	190	240	235	250	270
P8	150	220	210	235	260	120	180	170	190	210	180	230	225	240	255
P11	155	235	225	250	270	125	190	180	200	220	185	235	230	245	260
M1	165	240	235	260	285	140	210	205	225	245	215	280	270	290	310
M2	135	205	195	215	235	120	175	170	185	205	175	225	220	235	245
M3	110	165	155	175	190	95	140	135	150	165	135	160	155	165	175
M4	90	125	120	135	150	80	110	105	115	125	105	115	110	120	125
M5	75	105	100	110	125	65	90	90	95	105	85	95	95	100	105
N1	600	890	850	940	1025	—	—	—	—	—	—	—	—	—	—
N2	485	720	690	760	820	—	—	—	—	—	—	—	—	—	—
N3	325	475	460	510	550	—	—	—	—	—	—	—	—	—	—
N11	370	550	520	580	630	—	—	—	—	—	—	—	—	—	—
S1	42	60	55	65	70	24	33	32	35	39	43	60	60	60	65
S2	34	48	46	50	55	19	27	26	29	31	34	48	46	50	55
S3	30	42	40	44	49	17	24	23	25	28	31	42	41	44	48
S11	55	85	80	85	95	32	47	45	49	55	55	80	80	85	90
S12	33	48	46	50	55	25	36	35	38	42	42	60	60	65	70
S13	27	38	37	41	45	20	29	28	31	34	37	50	50	55	60

R218.19

90° ball nose cutters dia 16-32

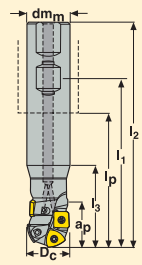

- For insert selection and cutting data recommendations, see page(s) 381-395
- For complete insert programme, see page(s) 634-633, 645

Part No.	Type of mounting	Dimensions in mm									Zc*	KG		() = No of inserts		
		ap	Dc	dmm	l1	l2	l3	lp	lc					218.19	SPMX	SPMT
R218.19 -2016.3-17.050A	Cyl.-Weldon	17,5	16	20	75	100	31	50	60	4	1	0,2	41600	-080(2)	-0602(2)	–
R218.19 -2520.3-21.069A	Cyl.-Weldon	21,6	20	25	93	125	31	69	82,5	4	1	0,4	26200	-100(2)	-0703(2)	–
R218.19 -2525.3-26.074HA	Cyl.-Weldon	26,6	25	25	98	130	46	74	82,5	4	1	0,4	21700	-125(2)	-0903(2)	–
R218.19 -3232.3-30.070HA	Cyl.-Weldon	31,2	32	32	94	130	46	70	82,5	4	1	0,7	14800	-160(2)	–	1004(2)

Spare Parts

For cutter	Insert screw	Insert key
		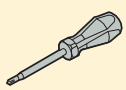
Dia 16	C02205-T07P	T07P-3
Dia 20	C02506-T07P	T07P-3
Dia 25	C03006-T09P	T09P-3
Dia 32	C03508-T15P	T15P-3

Please check availability in current price and stock-list

Torque value Dia 16-20 0,9 Nm, Dia 25 2,0 Nm, Dia 32 3,0 Nm. Torque keys, see page 690

R218.19

90° ball nose cutters dia 16-32

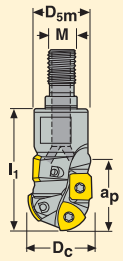

- For insert selection and cutting data recommendations, see page(s) 381-395
- For complete insert programme, see page(s) 634-633, 645

Part No.	Type of mounting	Dimensions in mm						Z_c*	KG		() = No of inserts		
		a_p	D_c	D_{5m}	l_1	M					218.19	SPMX	SPMT
R218.19 -0816.RE-12A	Combimaster	12	16	13,5	23	M8	3	1	0,1	41600	-080(2)	-0602	–
R218.19 -1020.RE-16A	Combimaster	16	20	18	28	M10	3	1	0,1	26200	-100(2)	-0703	–
-1220.RE-21A	Combimaster	21,6	20	21	45	M12	4	1	0,1	26200	-100(2)	-0703(2)	–
R218.19 -1225.RE-26HA	Combimaster	26,6	25	21	45	M12	4	1	0,1	21700	-125(2)	-0903(2)	–
R218.19 -1632.RE-36HA	Combimaster	38,6	32	28	55	M16	5	1	0,2	14800	-160(2)	–	-1004(3)

For Combimaster shanks and dimensions, see pages 588-598

Spare Parts

For cutter	Insert screw	Insert key
		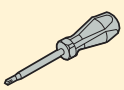
Dia 16	C02205-T07P	T07P-3
Dia 20	C02506-T07P	T07P-3
Dia 25	C03006-T09P	T09P-3
Dia 32	C03508-T15P	T15P-3

Please check availability in current price and stock-list

Torque value Dia 16-20 0,9 Nm, Dia 25 2,0 Nm, Dia 32 3,0 Nm. Torque keys, see page 690

R218.19

90° ball nose cutters dia 25-40

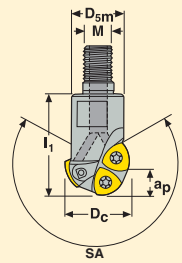

- For insert selection and cutting data recommendations, see page(s) 381-395
- For complete insert programme, see page(s) 645

Part No.	Type of mounting	Dimensions in mm										() = No of inserts
		a_p	D_c	D_{5m}	l_1	SA°	M		Z_c*	KG		218.19
R218.19 -1225.RE-14HFA	Combimaster	12,5	25	21	40	245	M12	3	1	0,1	21700	-125(3)
R218.19 -1632.RE-18HFA	Combimaster	16	32	28	40	237	M16	3	1	0,2	14800	-160(3)
R218.19 -1640.RE-25HFA	Combimaster	20	40	28	50	222	M16	3	1	0,2	10400	-200(3)

For Combimaster shanks and dimensions, see pages 588-598

Spare Parts

For cutter	Insert screw	Insert key
		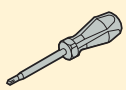
Dia 25	C03006-T09P	T09P-3
Dia 32	C03508-T15P	T15P-3
Dia 40	C45011-T20P	T20P-4

Please check availability in current price and stock-list

Torque value Dia 25 2,0 Nm, Dia 32 3,0 Nm, Dia 40 5,0 Nm. Torque keys, see page 690

R218.19-080 – Insert selection – Roughing

SMG			a_p	f_z		
				100%	30%	15%
P1	218.19-080T-M04 T350M	SPMX060204-75 F40M	7,0	0,11	0,12	0,15
P2	218.19-080T-M04 T350M	SPMX060204-75 F40M	7,0	0,11	0,12	0,15
P3	218.19-080T-M04 T350M	SPMX060204-75 F40M	7,0	0,10	0,11	0,14
P4	218.19-080T-MD04 MP2500	SPMX060204-75 F40M	7,0	0,10	0,11	0,14
P5	218.19-080T-MD04 MP2500	SPMX060204-75 F40M	7,0	0,10	0,11	0,14
P6	218.19-080T-MD04 MP2500	SPMX060204-75 F40M	7,0	0,095	0,11	0,14
P7	218.19-080T-MD04 MP2500	SPMX060204-75 F40M	7,0	0,095	0,11	0,14
P8	218.19-080T-MD04 MP2500	SPMX060204-75 F40M	7,0	0,10	0,11	0,14
P11	218.19-080T-MD04 MP2500	SPMX060204-75 F40M	7,0	0,095	0,11	0,14
M1	218.19-080T-M04 T350M	SPMX060204-75 F40M	7,0	0,11	0,12	0,15
M2	218.19-080T-M04 T350M	SPMX060204-75 F40M	7,0	0,10	0,11	0,14
M3	218.19-080T-M04 T350M	SPMX060204-75 F40M	6,0	0,080	0,085	0,11
M4	218.19-080T-M04 T350M	SPMX060204-75 F40M	4,5	0,070	0,075	0,095
M5	218.19-080T-M04 T350M	SPMX060204-75 F40M	4,5	0,070	0,075	0,095
K1	218.19-080T-MD04 MS2500	SPMX060204-75 F40M	7,0	0,11	0,12	0,15
K2	218.19-080T-MD04 MS2500	SPMX060204-75 F40M	7,0	0,10	0,11	0,14
K3	218.19-080T-MD04 MS2500	SPMX060204-75 F40M	7,0	0,10	0,11	0,14
K4	218.19-080T-MD04 MS2500	SPMX060204-75 F40M	7,0	0,10	0,11	0,14
K5	218.19-080T-MD04 MS2500	SPMX060204-75 F40M	7,0	0,090	0,095	0,12
K6	218.19-080T-MD04 MS2500	SPMX060204-75 F40M	7,0	0,10	0,11	0,14
K7	218.19-080T-MD04 MS2500	SPMX060204-75 F40M	7,0	0,090	0,095	0,12
N1	218.19-080-E04 H25	SPMX060204-75 F40M	7,0	0,14	0,15	0,19
N2	218.19-080-E04 H25	SPMX060204-75 F40M	7,0	0,14	0,15	0,19
N3	218.19-080-E04 H25	SPMX060204-75 F40M	7,0	0,14	0,15	0,19
N11	218.19-080-E04 H25	SPMX060204-75 F40M	7,0	0,14	0,15	0,19
S1	218.19-080T-M04 T350M	SPMX060204-75 F40M	4,5	0,070	0,075	0,095
S2	218.19-080T-M04 T350M	SPMX060204-75 F40M	4,5	0,070	0,075	0,095
S3	218.19-080T-M04 T350M	SPMX060204-75 F40M	4,5	0,065	0,070	0,090
S11	218.19-080T-M04 F40M	SPMX060204-75 F40M	5,0	0,080	0,085	0,11
S12	218.19-080T-M04 F40M	SPMX060204-75 F40M	5,0	0,080	0,085	0,11
S13	218.19-080T-M04 F40M	SPMX060204-75 F40M	4,5	0,070	0,075	0,095
H5	218.19-080T-MD04 F15M	SPMX060204-75 F40M	6,0	0,065	0,075	0,095
H8	218.19-080T-MD04 F15M	SPMX060204-75 F40M	5,0	0,050	0,055	0,070
H11	218.19-080T-MD04 F15M	SPMX060204-75 F40M	6,0	0,065	0,075	0,095
H12	218.19-080T-MD04 F15M	SPMX060204-75 F40M	6,0	0,065	0,075	0,095
H21	218.19-080T-MD04 F15M	SPMX060204-75 F40M	5,0	0,050	0,055	0,070

SMG = Seco material group
f_z = mm/tooth
v_c= m/min
a_e/D_c = %
All cutting data are start values

R218.19-080 – Insert selection – Semi-finishing

SMG		a_p	f_z			
			15%	12%	10%	8%
P1	218.19-080T-M04 F40M	7,0	0,15	0,16	0,18	0,20
P2	218.19-080T-M04 F40M	7,0	0,15	0,17	0,18	0,20
P3	218.19-080T-M04 F40M	7,0	0,14	0,16	0,17	0,19
P4	218.19-080T-MD04 MP2500	7,0	0,14	0,16	0,17	0,19
P5	218.19-080T-MD04 MP2500	7,0	0,14	0,15	0,17	0,18
P6	218.19-080T-MD04 MP2500	7,0	0,14	0,15	0,16	0,18
P7	218.19-080T-MD04 MP2500	7,0	0,14	0,15	0,16	0,18
P8	218.19-080T-MD04 MP2500	7,0	0,14	0,16	0,17	0,19
P11	218.19-080T-MD04 MP2500	7,0	0,14	0,15	0,16	0,18
M1	218.19-080T-M04 F30M	7,0	0,15	0,17	0,18	0,20
M2	218.19-080T-M04 F30M	7,0	0,14	0,15	0,17	0,18
M3	218.19-080T-M04 F30M	6,0	0,11	0,12	0,13	0,15
M4	218.19-080T-M04 F30M	4,5	0,095	0,11	0,12	0,13
M5	218.19-080T-M04 F30M	4,5	0,095	0,11	0,12	0,13
K1	218.19-080T-MD04 F25M	7,0	0,15	0,17	0,18	0,20
K2	218.19-080T-MD04 F25M	7,0	0,14	0,15	0,17	0,18
K3	218.19-080T-MD04 F25M	7,0	0,14	0,15	0,17	0,18
K4	218.19-080T-MD04 F25M	7,0	0,14	0,15	0,17	0,18
K5	218.19-080T-MD04 F25M	7,0	0,12	0,14	0,15	0,17
K6	218.19-080T-MD04 F25M	7,0	0,14	0,15	0,17	0,18
K7	218.19-080T-MD04 F25M	7,0	0,12	0,14	0,15	0,17
N1	218.19-080-E04 H25	7,0	0,19	0,22	0,24	0,26
N2	218.19-080-E04 H25	7,0	0,19	0,22	0,24	0,26
N3	218.19-080-E04 H25	7,0	0,19	0,22	0,24	0,26
N11	218.19-080-E04 H25	7,0	0,19	0,22	0,24	0,26
S1	218.19-080T-M04 F40M	4,5	0,095	0,11	0,12	0,13
S2	218.19-080T-M04 F40M	4,5	0,095	0,11	0,12	0,13
S3	218.19-080T-M04 F40M	4,5	0,090	0,10	0,11	0,12
S11	218.19-080T-M04 F40M	5,0	0,11	0,12	0,13	0,15
S12	218.19-080T-M04 F40M	5,0	0,11	0,12	0,13	0,15
S13	218.19-080T-M04 F40M	4,5	0,095	0,11	0,12	0,13
H5	218.19-080T-MD04 F15M	6,0	0,095	0,10	0,11	0,12
H8	218.19-080T-MD04 F15M	5,0	0,070	0,080	0,085	0,095
H11	218.19-080T-MD04 F15M	6,0	0,095	0,10	0,11	0,12
H12	218.19-080T-MD04 F15M	6,0	0,095	0,10	0,11	0,12
H21	218.19-080T-MD04 F15M	5,0	0,070	0,080	0,085	0,095

SMG = Seco material group
f_z = mm/tooth
v_c= m/min
a_e/D_c = %
All cutting data are start values

R218.19-080 – Cutting data v_c = (m/min)

	MP2500			T350M			F15M			F25M			F40M			MS2500		
SMG	100%	30%	15%	100%	30%	15%	100%	30%	15%	100%	30%	15%	100%	30%	15%	100%	30%	15%
P1	460	570	640	400	495	550	400	490	550	365	450	500	350	430	480	480	590	660
P2	450	550	620	390	480	540	390	475	540	355	435	490	340	420	470	465	570	640
P3	395	485	540	345	420	470	340	420	465	315	385	430	300	365	410	410	500	560
P4	350	425	475	305	370	415	300	370	410	275	340	375	265	325	360	360	440	495
P5	330	410	455	290	355	395	285	350	395	265	320	360	250	310	345	345	420	470
P6	375	460	510	330	400	445	325	395	440	300	360	405	285	345	385	390	475	530
P7	355	430	485	310	375	420	305	375	415	280	340	380	270	325	365	370	445	500
P8	330	410	455	290	355	395	285	350	395	265	320	360	250	310	345	345	420	470
P11	345	420	470	300	365	410	300	360	405	275	330	370	260	320	355	360	435	485
M1	325	400	445	300	370	415	315	385	430	285	350	395	275	335	380	335	410	460
M2	265	330	365	250	305	340	260	315	355	235	290	325	225	280	310	275	340	375
M3	215	275	295	200	255	275	205	265	285	190	240	260	180	230	250	220	280	300
M4	165	215	225	155	200	210	160	210	220	145	190	200	140	185	190	170	220	235
M5	135	180	190	130	165	175	130	175	180	120	160	165	115	150	160	140	185	195
K1	355	440	490	310	380	430	305	380	425	280	345	390	270	330	370	370	455	510
K2	315	385	430	275	335	375	270	335	375	250	305	340	240	295	330	325	400	450
K3	265	325	365	235	285	320	230	280	315	210	260	290	200	250	275	275	340	380
K4	255	310	350	220	270	305	220	270	300	200	245	275	195	235	265	265	325	360
K5	155	190	215	135	165	185	135	165	185	125	150	170	120	145	165	160	200	220
K6	225	275	310	195	240	270	195	240	265	180	220	245	170	210	235	230	285	320
K7	200	245	275	175	215	240	170	210	235	155	195	215	150	185	210	205	255	285
N1	1325	1650	1850	—	—	—	1150	1425	1600	1050	1300	1450	1000	1250	1400	—	—	—
N2	1075	1325	1475	—	—	—	930	1150	1275	850	1050	1175	810	1000	1125	—	—	—
N3	720	880	990	—	—	—	620	760	860	570	700	780	540	670	750	—	—	—
N11	820	1000	1125	—	—	—	710	870	980	650	800	900	620	770	860	—	—	—
S1	80	105	110	70	95	100	75	95	100	70	90	95	65	85	90	85	110	115
S2	65	85	90	60	75	80	60	80	80	55	70	75	50	70	70	65	85	90
S3	55	75	75	50	65	70	50	70	70	48	60	65	46	60	65	60	75	80
S11	115	145	155	100	130	140	105	135	145	95	125	130	90	120	125	115	150	160
S12	65	85	90	60	75	80	60	80	85	55	70	75	55	70	75	65	85	90
S13	50	70	70	46	60	65	48	65	65	44	55	60	42	55	60	55	70	75
H5	65	85	90	65	80	85	65	80	85	55	70	80	55	70	75	70	85	90
H8	70	90	95	65	85	90	65	85	90	60	75	80	55	75	80	70	90	95
H11	85	105	115	80	100	110	80	100	110	75	90	100	70	90	95	85	110	120
H12	135	170	185	130	165	175	130	165	175	120	150	160	115	145	155	140	175	190
H21	70	90	95	65	85	90	65	85	90	60	75	80	55	75	80	70	90	95

R218.19-100 – Insert selection – Roughing

SMG			a_p	f_z		
				100%	30%	15%
P1	218.19-100T-M06 F40M	SPMX070304-75 F40M	13,0	0,12	0,13	0,17
P2	218.19-100T-M06 F40M	SPMX070304-75 F40M	13,0	0,13	0,14	0,18
P3	218.19-100T-M06 F40M	SPMX070304-75 F40M	13,0	0,12	0,13	0,17
P4	218.19-100T-MD08 MP2500	SPMX070304-75 F40M	13,0	0,16	0,17	0,22
P5	218.19-100T-MD08 MP2500	SPMX070304-75 F40M	13,0	0,15	0,17	0,22
P6	218.19-100T-MD08 MP2500	SPMX070304-75 F40M	13,0	0,15	0,16	0,22
P7	218.19-100T-MD08 MP2500	SPMX070304-75 F40M	13,0	0,15	0,16	0,22
P8	218.19-100T-MD08 MP2500	SPMX070304-75 F40M	13,0	0,16	0,17	0,22
P11	218.19-100T-MD08 MP2500	SPMX070304-75 F40M	13,0	0,15	0,16	0,22
M1	218.19-100T-M06 T350M	SPMX070304-75 F40M	13,0	0,13	0,14	0,18
M2	218.19-100T-M06 T350M	SPMX070304-75 F40M	13,0	0,11	0,12	0,16
M3	218.19-100T-M06 T350M	SPMX070304-75 F40M	10,0	0,10	0,11	0,14
M4	218.19-100T-M06 T350M	SPMX070304-75 F40M	8,0	0,090	0,10	0,13
M5	218.19-100T-M06 T350M	SPMX070304-75 F40M	8,0	0,090	0,10	0,13
K1	218.19-100T-MD08 MP1500	SPMX070304-75 F40M	13,0	0,17	0,18	0,24
K2	218.19-100T-MD08 MP1500	SPMX070304-75 F40M	13,0	0,15	0,17	0,22
K3	218.19-100T-MD08 MP1500	SPMX070304-75 F40M	13,0	0,15	0,17	0,22
K4	218.19-100T-MD08 MP1500	SPMX070304-75 F40M	13,0	0,15	0,17	0,22
K5	218.19-100T-MD08 MP1500	SPMX070304-75 F40M	13,0	0,14	0,15	0,19
K6	218.19-100T-MD08 MP1500	SPMX070304-75 F40M	13,0	0,15	0,17	0,22
K7	218.19-100T-MD08 MP1500	SPMX070304-75 F40M	13,0	0,14	0,15	0,19
N1	218.19-100-E06 H25	SPMX070304-75 F40M	13,0	0,16	0,17	0,22
N2	218.19-100-E06 H25	SPMX070304-75 F40M	13,0	0,16	0,17	0,22
N3	218.19-100-E06 H25	SPMX070304-75 F40M	13,0	0,16	0,17	0,22
N11	218.19-100-E06 H25	SPMX070304-75 F40M	13,0	0,16	0,17	0,22
S1	218.19-100T-M06 MS2500	SPMX070304-75 F40M	8,0	0,090	0,10	0,13
S2	218.19-100T-M06 MS2500	SPMX070304-75 F40M	8,0	0,090	0,10	0,13
S3	218.19-100T-M06 MS2500	SPMX070304-75 F40M	8,0	0,085	0,090	0,12
S11	218.19-100T-M06 MS2050	SPMX070304-75 F40M	9,0	0,10	0,11	0,14
S12	218.19-100T-M06 MS2050	SPMX070304-75 F40M	9,0	0,10	0,11	0,14
S13	218.19-100T-M06 MS2050	SPMX070304-75 F40M	8,0	0,090	0,10	0,13
H3	218.19-100T-MD08 F15M	SPMX070304-75 F40M	—	—	—	—
H5	218.19-100T-MD08 F15M	SPMX070304-75 F40M	10,0	0,12	0,13	0,16
H7	218.19-100T-MD08 F15M	SPMX070304-75 F40M	—	—	—	—
H8	218.19-100T-MD08 F15M	SPMX070304-75 F40M	9,0	0,090	0,095	0,13
H11	218.19-100T-MD08 F15M	SPMX070304-75 F40M	10,0	0,12	0,13	0,16
H12	218.19-100T-MD08 F15M	SPMX070304-75 F40M	10,0	0,12	0,13	0,16
H21	218.19-100T-MD08 F15M	SPMX070304-75 F40M	9,0	0,090	0,095	0,13
H31	218.19-100T-MD08 F15M	SPMX070304-75 F40M	—	—	—	—

SMG = Seco material group
f_z = mm/tooth
v_c= m/min
a_e/D_c = %
All cutting data are start values

R218.19-100 – Insert selection – Semi-finishing

SMG		a_p	f_z			
			15%	12%	10%	8%
P1	218.19-100T-M06 F40M	13,0	0,17	0,19	0,20	0,24
P2	218.19-100T-M06 F40M	13,0	0,18	0,20	0,22	0,24
P3	218.19-100T-M06 F40M	13,0	0,17	0,18	0,20	0,22
P4	218.19-100T-MD08 MP1500	13,0	0,22	0,24	0,26	0,30
P5	218.19-100T-MD08 MP1500	13,0	0,22	0,24	0,26	0,28
P6	218.19-100T-MD08 MP1500	13,0	0,22	0,24	0,26	0,28
P7	218.19-100T-MD08 MP1500	13,0	0,22	0,24	0,26	0,28
P8	218.19-100T-MD08 MP1500	13,0	0,22	0,24	0,26	0,30
P11	218.19-100T-MD08 MP1500	13,0	0,22	0,24	0,26	0,28
M1	218.19-100T-M06 F25M	13,0	0,18	0,20	0,22	0,24
M2	218.19-100T-M06 F25M	13,0	0,16	0,18	0,19	0,22
M3	218.19-100T-M06 F25M	10,0	0,14	0,16	0,17	0,19
M4	218.19-100T-M06 F25M	8,0	0,13	0,14	0,15	0,17
M5	218.19-100T-M06 F25M	8,0	0,13	0,14	0,15	0,17
K1	218.19-100T-MD08 F25M	13,0	0,24	0,26	0,28	0,32
K2	218.19-100T-MD08 F25M	13,0	0,22	0,24	0,26	0,28
K3	218.19-100T-MD08 F25M	13,0	0,22	0,24	0,26	0,28
K4	218.19-100T-MD08 F25M	13,0	0,22	0,24	0,26	0,28
K5	218.19-100T-MD08 F25M	13,0	0,19	0,22	0,24	0,26
K6	218.19-100T-MD08 F25M	13,0	0,22	0,24	0,26	0,28
K7	218.19-100T-MD08 F25M	13,0	0,19	0,22	0,24	0,26
N1	218.19-100-E06 H25	13,0	0,22	0,24	0,28	0,30
N2	218.19-100-E06 H25	13,0	0,22	0,24	0,28	0,30
N3	218.19-100-E06 H25	13,0	0,22	0,24	0,28	0,30
N11	218.19-100-E06 H25	13,0	0,22	0,24	0,28	0,30
S1	218.19-100T-M06 F40M	8,0	0,13	0,14	0,15	0,17
S2	218.19-100T-M06 F40M	8,0	0,13	0,14	0,15	0,17
S3	218.19-100T-M06 F40M	8,0	0,12	0,13	0,14	0,16
S11	218.19-100T-M06 MS2050	9,0	0,14	0,16	0,17	0,19
S12	218.19-100T-M06 MS2050	9,0	0,14	0,16	0,17	0,19
S13	218.19-100T-M06 MS2050	8,0	0,13	0,14	0,15	0,17
H5	218.19-100T-MD08 F15M	10,0	0,16	0,18	0,20	0,22
H8	218.19-100T-MD08 F15M	9,0	0,13	0,14	0,15	0,17
H11	218.19-100T-MD08 F15M	10,0	0,16	0,18	0,20	0,22
H12	218.19-100T-MD08 F15M	10,0	0,16	0,18	0,20	0,22
H21	218.19-100T-MD08 F15M	9,0	0,13	0,14	0,15	0,17

SMG = Seco material group
f_z = mm/tooth
v_c= m/min
a_e/D_c = %
All cutting data are start values

R218.19-100 – Cutting data v_c = (m/min)

	MP1500			MP2500			T350M			F15M			F25M			F40M		
SMG	100%	30%	15%	100%	30%	15%	100%	30%	15%	100%	30%	15%	100%	30%	15%	100%	30%	15%
P1	415	510	570	370	455	510	365	455	500	335	410	460	350	435	475	320	395	435
P2	405	500	560	360	440	495	355	435	485	325	400	450	340	415	465	310	380	420
P3	355	440	480	315	390	425	315	380	430	285	355	385	300	365	410	270	330	370
P4	310	390	435	275	345	385	275	340	375	250	310	350	265	325	360	240	295	330
P5	305	370	415	270	330	365	265	325	365	245	300	335	250	310	350	230	285	315
P6	340	415	465	300	370	410	295	365	410	275	335	375	285	350	390	255	315	355
P7	320	390	440	285	350	390	280	345	385	260	315	350	265	330	370	240	300	335
P8	300	370	405	265	330	360	265	320	360	240	300	325	250	305	345	230	280	315
P11	310	380	425	275	340	375	270	335	375	250	305	340	260	320	360	235	290	325
M1	—	—	—	260	320	355	275	335	375	265	325	365	275	335	375	250	305	340
M2	—	—	—	215	265	295	225	280	315	220	270	300	225	280	315	205	255	285
M3	—	—	—	175	225	240	185	235	250	175	230	245	185	235	250	165	215	225
M4	—	—	—	135	180	185	140	185	195	135	185	190	140	185	195	130	170	175
M5	—	—	—	110	150	155	120	155	160	115	155	155	120	155	160	110	140	145
K1	320	395	445	285	350	390	285	345	385	260	320	355	270	330	370	245	300	335
K2	285	350	390	255	310	345	250	310	345	230	285	315	240	295	330	215	270	300
K3	245	295	330	215	265	295	210	260	295	195	240	265	200	250	280	185	225	255
K4	230	285	315	205	250	280	200	250	280	185	230	255	195	240	265	175	215	245
K5	140	175	195	125	155	170	125	150	170	115	140	155	120	145	165	110	130	150
K6	205	250	280	180	220	245	180	220	245	165	200	225	170	210	235	155	190	215
K7	180	225	245	160	195	220	160	195	220	145	180	200	155	185	210	140	170	190
N1	—	—	—	1050	1300	1450	—	—	—	950	1175	1300	1000	1225	1375	910	1100	1250
N2	—	—	—	840	1050	1175	—	—	—	770	950	1050	810	980	1100	740	890	1000
N3	—	—	—	560	690	780	—	—	—	510	630	710	540	650	730	490	590	670
N11	—	—	—	640	790	890	—	—	—	580	720	810	620	750	840	560	680	760
S1	—	—	—	65	90	90	65	85	90	65	85	90	65	85	90	60	80	80
S2	—	—	—	55	70	70	55	70	70	50	70	70	55	70	70	49	65	65
S3	—	—	—	46	60	65	47	60	65	45	60	60	47	60	65	42	55	60
S11	—	—	—	90	120	125	95	120	125	90	120	125	95	120	125	85	110	115
S12	—	—	—	50	70	75	55	70	75	50	70	70	55	70	75	49	65	65
S13	—	—	—	42	55	60	43	55	60	41	55	55	43	55	60	39	50	55
H5	65	85	90	55	70	75	60	75	80	55	70	75	55	70	75	50	65	70
H8	70	95	100	55	75	80	60	80	85	55	75	80	60	75	80	55	70	75
H11	85	110	115	70	90	95	75	95	100	70	90	95	70	90	100	65	85	90
H12	140	175	190	110	140	150	120	155	165	110	140	150	115	150	160	105	135	145
H21	70	95	100	55	75	80	60	80	85	55	75	80	60	75	80	55	70	75

R218.19-100 – Cutting data v_c = (m/min)

	MS2050			MS2500			H25		
SMG	100%	30%	15%	100%	30%	15%	100%	30%	15%
P1	345	395	425	460	570	620	—	—	—
P2	335	390	415	445	540	610	—	—	—
P3	285	330	345	390	475	540	—	—	—
P4	250	285	305	345	425	470	—	—	—
P5	240	275	285	330	405	455	—	—	—
P6	265	310	320	370	455	510	—	—	—
P7	250	290	305	350	430	485	—	—	—
P8	240	280	290	330	400	450	—	—	—
P11	245	280	295	340	420	470	—	—	—
M1	290	340	365	320	390	435	—	—	—
M2	230	270	280	265	325	365	—	—	—
M3	160	160	195	215	275	290	—	—	—
M4	110	90	135	165	220	225	—	—	—
M5	95	75	115	140	180	185	—	—	—
K1	335	395	420	355	430	480	—	—	—
K2	290	330	345	315	385	435	—	—	—
K3	245	280	295	265	325	365	—	—	—
K4	230	270	280	255	310	350	—	—	—
K5	130	155	160	155	190	215	—	—	—
K6	205	235	245	220	275	310	—	—	—
K7	170	200	205	200	240	275	—	—	—
N1	—	—	—	—	—	—	950	1150	1300
N2	—	—	—	—	—	—	770	930	1050
N3	—	—	—	—	—	—	510	620	690
N11	—	—	—	—	—	—	580	710	790
S1	70	90	85	80	105	110	—	—	—
S2	55	70	70	65	85	90	—	—	—
S3	49	65	60	55	75	75	—	—	—
S11	95	125	120	115	150	155	—	—	—
S12	70	95	90	65	85	90	—	—	—
S13	60	75	75	50	70	70	—	—	—
H5	—	—	—	65	85	90	—	—	—
H8	—	—	—	70	90	95	—	—	—
H11	—	—	—	85	110	115	—	—	—
H12	—	—	—	135	175	185	—	—	—
H21	—	—	—	70	90	95	—	—	—

R218.19-125 – Selection roughing

SMG			a_p	f_z		
				100%	30%	15%
P1	218.19-100T-M06 F40M	SPMX070304-75 F40M	13,0	0,12	0,13	0,17
P2	218.19-100T-M06 F40M	SPMX070304-75 F40M	13,0	0,13	0,14	0,18
P3	218.19-100T-M06 F40M	SPMX070304-75 F40M	13,0	0,12	0,13	0,17
P4	218.19-100T-MD08 MP2500	SPMX070304-75 F40M	13,0	0,16	0,17	0,22
P5	218.19-100T-MD08 MP2500	SPMX070304-75 F40M	13,0	0,15	0,17	0,22
P6	218.19-100T-MD08 MP2500	SPMX070304-75 F40M	13,0	0,15	0,16	0,22
P7	218.19-100T-MD08 MP2500	SPMX070304-75 F40M	13,0	0,15	0,16	0,22
P8	218.19-100T-MD08 MP2500	SPMX070304-75 F40M	13,0	0,16	0,17	0,22
P11	218.19-100T-MD08 MP2500	SPMX070304-75 F40M	13,0	0,15	0,16	0,22
M1	218.19-100T-M06 T350M	SPMX070304-75 F40M	13,0	0,13	0,14	0,18
M2	218.19-100T-M06 T350M	SPMX070304-75 F40M	13,0	0,11	0,12	0,16
M3	218.19-100T-M06 T350M	SPMX070304-75 F40M	10,0	0,10	0,11	0,14
M4	218.19-100T-M06 T350M	SPMX070304-75 F40M	8,0	0,090	0,10	0,13
M5	218.19-100T-M06 T350M	SPMX070304-75 F40M	8,0	0,090	0,10	0,13
K1	218.19-100T-MD08 MP1500	SPMX070304-75 F40M	13,0	0,17	0,18	0,24
K2	218.19-100T-MD08 MP1500	SPMX070304-75 F40M	13,0	0,15	0,17	0,22
K3	218.19-100T-MD08 MP1500	SPMX070304-75 F40M	13,0	0,15	0,17	0,22
K4	218.19-100T-MD08 MP1500	SPMX070304-75 F40M	13,0	0,15	0,17	0,22
K5	218.19-100T-MD08 MP1500	SPMX070304-75 F40M	13,0	0,14	0,15	0,19
K6	218.19-100T-MD08 MP1500	SPMX070304-75 F40M	13,0	0,15	0,17	0,22
K7	218.19-100T-MD08 MP1500	SPMX070304-75 F40M	13,0	0,14	0,15	0,19
N1	218.19-100-E06 H25	SPMX070304-75 F40M	13,0	0,16	0,17	0,22
N2	218.19-100-E06 H25	SPMX070304-75 F40M	13,0	0,16	0,17	0,22
N3	218.19-100-E06 H25	SPMX070304-75 F40M	13,0	0,16	0,17	0,22
N11	218.19-100-E06 H25	SPMX070304-75 F40M	13,0	0,16	0,17	0,22
S1	218.19-100T-M06 MS2500	SPMX070304-75 F40M	8,0	0,090	0,10	0,13
S2	218.19-100T-M06 MS2500	SPMX070304-75 F40M	8,0	0,090	0,10	0,13
S3	218.19-100T-M06 MS2500	SPMX070304-75 F40M	8,0	0,085	0,090	0,12
S11	218.19-100T-M06 MS2050	SPMX070304-75 F40M	9,0	0,10	0,11	0,14
S12	218.19-100T-M06 MS2050	SPMX070304-75 F40M	9,0	0,10	0,11	0,14
S13	218.19-100T-M06 MS2050	SPMX070304-75 F40M	8,0	0,090	0,10	0,13
H5	218.19-100T-MD08 F15M	SPMX070304-75 F40M	10,0	0,12	0,13	0,16
H8	218.19-100T-MD08 F15M	SPMX070304-75 F40M	9,0	0,090	0,095	0,13
H11	218.19-100T-MD08 F15M	SPMX070304-75 F40M	10,0	0,12	0,13	0,16
H12	218.19-100T-MD08 F15M	SPMX070304-75 F40M	10,0	0,12	0,13	0,16
H21	218.19-100T-MD08 F15M	SPMX070304-75 F40M	9,0	0,090	0,095	0,13

SMG = Seco material group
f_z = mm/tooth
v_c= m/min
a_e/D_c = %
All cutting data are start values

R218.19-125 – Insert selection – Semi-finishing

SMG		a_p	f_z			
			15%	12%	10%	8%
P1	218.19-125T-T3-M07 F40M	16,0	0,19	0,20	0,22	0,26
P2	218.19-125T-T3-M07 F40M	16,0	0,19	0,22	0,22	0,26
P3	218.19-125T-T3-M07 F40M	16,0	0,18	0,20	0,22	0,24
P4	218.19-125T-T3-MD10 MP1500	16,0	0,26	0,28	0,30	0,34
P5	218.19-125T-T3-MD10 MP1500	16,0	0,24	0,28	0,30	0,34
P6	218.19-125T-T3-MD10 MP1500	16,0	0,24	0,28	0,30	0,34
P7	218.19-125T-T3-MD10 MP1500	16,0	0,24	0,28	0,30	0,34
P8	218.19-125T-T3-MD10 MP1500	16,0	0,26	0,28	0,32	0,34
P11	218.19-125T-T3-MD10 MP1500	16,0	0,24	0,28	0,30	0,34
M1	218.19-125T-T3-M07 F25M	16,0	0,19	0,22	0,22	0,26
M2	218.19-125T-T3-M07 F25M	16,0	0,17	0,19	0,20	0,24
M3	218.19-125T-T3-M07 F25M	13,0	0,15	0,17	0,18	0,20
M4	218.19-125T-T3-M07 F25M	10,0	0,14	0,15	0,16	0,18
M5	218.19-125T-T3-M07 F25M	10,0	0,14	0,15	0,16	0,18
K1	218.19-125T-T3-MD10 F25M	16,0	0,28	0,30	0,34	0,36
K2	218.19-125T-T3-MD10 F25M	16,0	0,24	0,28	0,30	0,34
K3	218.19-125T-T3-MD10 F25M	16,0	0,24	0,28	0,30	0,34
K4	218.19-125T-T3-MD10 F25M	16,0	0,24	0,28	0,30	0,34
K5	218.19-125T-T3-MD10 F25M	16,0	0,22	0,24	0,26	0,30
K6	218.19-125T-T3-MD10 F25M	16,0	0,24	0,28	0,30	0,34
K7	218.19-125T-T3-MD10 F25M	16,0	0,22	0,24	0,26	0,30
N1	218.19-125-T3-E06 H25	16,0	0,20	0,24	0,26	0,28
N2	218.19-125-T3-E06 H25	16,0	0,20	0,24	0,26	0,28
N3	218.19-125-T3-E06 H25	16,0	0,20	0,24	0,26	0,28
N11	218.19-125-T3-E06 H25	16,0	0,20	0,24	0,26	0,28
S1	218.19-125T-T3-M07 F40M	10,0	0,14	0,15	0,16	0,18
S2	218.19-125T-T3-M07 F40M	10,0	0,14	0,15	0,16	0,18
S3	218.19-125T-T3-M07 F40M	10,0	0,13	0,14	0,15	0,17
S11	218.19-125T-T3-M07 MS2050	11,0	0,16	0,17	0,19	0,20
S12	218.19-125T-T3-M07 MS2050	11,0	0,16	0,17	0,19	0,20
S13	218.19-125T-T3-M07 MS2050	10,0	0,14	0,15	0,16	0,18
H5	218.19-125T-T3-MD10 F15M	13,0	0,19	0,20	0,22	0,24
H8	218.19-125T-T3-MD10 F15M	11,0	0,14	0,16	0,17	0,19
H11	218.19-125T-T3-MD10 F15M	13,0	0,19	0,20	0,22	0,24
H12	218.19-125T-T3-MD10 F15M	13,0	0,19	0,20	0,22	0,24
H21	218.19-125T-T3-MD10 F15M	11,0	0,14	0,16	0,17	0,19

SMG = Seco material group
f_z = mm/tooth
v_c= m/min
a_e/D_c = %
All cutting data are start values

R218.19-125 – Cutting data v_c = (m/min)

	MP1500			MP2500			T350M			F15M			F25M			F40M		
SMG	100%	30%	15%	100%	30%	15%	100%	30%	15%	100%	30%	15%	100%	30%	15%	100%	30%	15%
P1	405	500	550	360	445	485	375	450	510	325	405	440	355	430	485	325	395	440
P2	395	475	530	350	420	475	355	440	495	315	385	430	340	420	475	310	385	430
P3	345	420	470	305	375	415	315	385	430	275	340	380	300	370	410	270	335	375
P4	305	370	415	270	330	365	275	340	380	245	300	335	265	325	365	240	295	330
P5	290	360	395	255	320	350	270	325	370	235	290	320	255	310	350	235	280	320
P6	325	405	455	290	355	400	300	370	415	260	325	365	290	355	395	260	325	360
P7	305	380	430	270	335	380	285	350	390	245	305	345	270	335	375	245	305	340
P8	290	355	395	255	315	350	265	325	360	235	285	320	250	310	345	230	280	315
P11	300	370	415	265	330	370	275	340	380	240	300	335	265	325	360	240	295	330
M1	—	—	—	250	305	340	275	340	380	255	310	345	275	340	380	250	310	345
M2	—	—	—	205	255	280	230	280	315	210	260	285	230	280	315	210	255	290
M3	—	—	—	170	205	230	185	225	255	170	210	235	185	225	255	165	205	230
M4	—	—	—	130	170	180	145	180	195	135	170	185	145	180	195	130	165	180
M5	—	—	—	110	140	150	120	150	165	110	145	155	120	150	165	110	140	150
K1	310	375	425	275	335	375	280	350	390	250	305	340	270	335	375	245	305	340
K2	275	340	375	245	300	330	255	310	350	220	275	300	245	295	335	220	270	305
K3	230	290	315	205	255	280	215	260	295	185	230	255	205	250	280	185	225	255
K4	220	275	305	195	245	270	205	250	280	180	220	245	195	240	270	180	215	245
K5	135	170	190	120	150	165	125	155	170	110	135	150	120	145	165	110	135	150
K6	195	245	265	175	215	235	180	220	250	155	195	215	175	210	240	160	190	215
K7	175	215	240	155	190	215	160	195	220	140	175	195	155	190	210	140	170	190
N1	—	—	—	1025	1225	1375	—	—	—	930	1125	1250	1025	1225	1400	920	1125	1275
N2	—	—	—	820	990	1100	—	—	—	750	900	1000	820	1000	1125	740	910	1025
N3	—	—	—	550	660	740	—	—	—	500	600	670	550	670	750	495	610	680
N11	—	—	—	630	760	850	—	—	—	570	690	770	620	760	860	570	690	780
S1	—	—	—	65	80	90	65	85	90	60	80	85	65	85	90	60	75	85
S2	—	—	—	50	65	70	55	70	75	50	65	70	55	70	75	49	60	65
S3	—	—	—	44	60	60	47	60	65	43	55	60	47	60	65	43	55	60
S11	—	—	—	90	110	120	95	115	130	85	110	120	95	115	130	85	105	115
S12	—	—	—	50	65	70	55	65	75	50	65	70	55	65	75	49	60	65
S13	—	—	—	41	55	55	43	55	60	40	50	55	43	55	60	39	50	55
H5	65	80	90	50	65	70	60	70	80	50	65	70	55	70	75	50	60	70
H8	70	85	95	55	70	75	60	75	85	55	70	75	60	75	80	55	65	75
H11	85	100	115	65	80	90	75	90	100	65	80	90	70	90	100	65	80	90
H12	135	165	185	110	135	150	120	150	165	110	135	150	115	140	160	105	130	145
H21	70	85	95	55	70	75	60	75	85	55	70	75	60	75	80	55	65	75

R218.19-125 – Cutting data v_c = (m/min)

	MK2050			MS2050			MS2500			H25		
SMG	100%	30%	15%	100%	30%	15%	100%	30%	15%	100%	30%	15%
P1	355	440	480	345	405	430	465	570	630	—	—	—
P2	345	415	465	340	395	415	445	550	620	—	—	—
P3	300	365	410	290	335	355	390	485	540	—	—	—
P4	265	325	360	255	295	310	345	425	475	—	—	—
P5	250	315	345	240	280	290	335	405	460	—	—	—
P6	285	350	395	270	310	325	375	465	520	—	—	—
P7	265	330	375	255	290	310	355	440	490	—	—	—
P8	250	310	345	245	280	295	330	405	455	—	—	—
P11	260	325	365	245	285	300	345	425	475	—	—	—
M1	—	—	—	300	345	365	320	395	445	—	—	—
M2	—	—	—	235	275	285	270	325	370	—	—	—
M3	—	—	—	165	195	200	215	260	295	—	—	—
M4	—	—	—	115	115	135	165	210	230	—	—	—
M5	—	—	—	95	95	110	140	175	190	—	—	—
K1	370	450	500	345	400	420	355	435	490	—	—	—
K2	325	405	445	290	340	350	320	385	435	—	—	—
K3	275	345	375	245	290	300	270	325	370	—	—	—
K4	265	325	360	235	275	285	255	310	355	—	—	—
K5	160	200	225	135	155	165	155	195	215	—	—	—
K6	230	290	315	205	240	250	225	275	310	—	—	—
K7	210	255	285	170	200	210	200	245	275	—	—	—
N1	—	—	—	—	—	—	—	—	—	970	1200	1350
N2	—	—	—	—	—	—	—	—	—	780	970	1100
N3	—	—	—	—	—	—	—	—	—	520	650	730
N11	—	—	—	—	—	—	—	—	—	600	740	830
S1	—	—	—	70	85	90	80	105	110	—	—	—
S2	—	—	—	55	70	70	65	85	90	—	—	—
S3	—	—	—	50	60	65	55	75	80	—	—	—
S11	—	—	—	95	115	120	115	145	155	—	—	—
S12	—	—	—	70	85	90	65	80	90	—	—	—
S13	—	—	—	60	75	75	55	65	70	—	—	—
H5	—	—	—	—	—	—	65	80	90	—	—	—
H8	—	—	—	—	—	—	70	85	95	—	—	—
H11	—	—	—	—	—	—	85	105	115	—	—	—
H12	—	—	—	—	—	—	135	170	185	—	—	—
H21	—	—	—	—	—	—	70	85	95	—	—	—

R218.19-160 – Insert selection – Roughing

SMG			a_p	f_z 100%	f_z 30%	f_z 15%
P1	218.19-160T-04-M08 T350M	SPMT100408T-M08 F40M	19,0	0,14	0,15	0,20
P2	218.19-160T-04-M08 T350M	SPMT100408T-M08 F40M	19,0	0,14	0,16	0,20
P3	218.19-160T-04-M08 T350M	SPMT100408T-M08 F40M	19,0	0,14	0,15	0,19
P4	218.19-160T-04-MD11 MP2500	SPMT100408T-M08 F40M	19,0	0,18	0,20	0,26
P5	218.19-160T-04-MD11 MP2500	SPMT100408T-M08 F40M	19,0	0,18	0,20	0,26
P6	218.19-160T-04-MD11 MP2500	SPMT100408T-M08 F40M	19,0	0,18	0,19	0,26
P7	218.19-160T-04-MD11 MP2500	SPMT100408T-M08 F40M	19,0	0,18	0,19	0,26
P8	218.19-160T-04-MD11 MP2500	SPMT100408T-M08 F40M	19,0	0,19	0,20	0,26
P11	218.19-160T-04-MD11 MP2500	SPMT100408T-M08 F40M	19,0	0,18	0,19	0,26
M1	218.19-160T-04-M08 T350M	SPMT100408T-M08 F40M	19,0	0,14	0,16	0,20
M2	218.19-160T-04-M08 T350M	SPMT100408T-M08 F40M	19,0	0,13	0,14	0,18
M3	218.19-160T-04-M08 T350M	SPMT100408T-M08 F40M	15,0	0,11	0,12	0,16
M4	218.19-160T-04-M08 T350M	SPMT100408T-M08 F40M	11,0	0,10	0,11	0,14
M5	218.19-160T-04-M08 T350M	SPMT100408T-M08 F40M	11,0	0,10	0,11	0,14
K1	218.19-160T-04-MD11 MK2050	SPMT100408T-M08 F40M	19,0	0,20	0,22	0,28
K2	218.19-160T-04-MD11 MK2050	SPMT100408T-M08 F40M	19,0	0,18	0,20	0,26
K3	218.19-160T-04-MD11 MK2050	SPMT100408T-M08 F40M	19,0	0,18	0,20	0,26
K4	218.19-160T-04-MD11 MK2050	SPMT100408T-M08 F40M	19,0	0,18	0,20	0,26
K5	218.19-160T-04-MD11 MK2050	SPMT100408T-M08 F40M	19,0	0,16	0,18	0,22
K6	218.19-160T-04-MD11 MK2050	SPMT100408T-M08 F40M	19,0	0,18	0,20	0,26
K7	218.19-160T-04-MD11 MK2050	SPMT100408T-M08 F40M	19,0	0,16	0,18	0,22
N1	218.19-160-04-E07 H25	SPMT100408T-M08 F40M	19,0	0,16	0,17	0,22
N2	218.19-160-04-E07 H25	SPMT100408T-M08 F40M	19,0	0,16	0,17	0,22
N3	218.19-160-04-E07 H25	SPMT100408T-M08 F40M	19,0	0,16	0,17	0,22
N11	218.19-160-04-E07 H25	SPMT100408T-M08 F40M	19,0	0,16	0,17	0,22
S1	218.19-160T-04-M08 MS2500	SPMT100408T-M08 F40M	11,0	0,10	0,11	0,14
S2	218.19-160T-04-M08 MS2500	SPMT100408T-M08 F40M	11,0	0,10	0,11	0,14
S3	218.19-160T-04-M08 MS2500	SPMT100408T-M08 F40M	11,0	0,090	0,10	0,13
S11	218.19-160T-04-M08 MS2050	SPMT100408T-M08 F40M	13,0	0,11	0,12	0,16
S12	218.19-160T-04-M08 MS2050	SPMT100408T-M08 F40M	13,0	0,11	0,12	0,16
S13	218.19-160T-04-M08 MS2050	SPMT100408T-M08 F40M	11,0	0,10	0,11	0,14
H5	218.19-160T-04-MD11 F15M	SPMT100408T-M08 F40M	15,0	0,13	0,14	0,19
H8	218.19-160T-04-MD11 F15M	SPMT100408T-M08 F40M	13,0	0,10	0,11	0,14
H11	218.19-160T-04-MD11 F15M	SPMT100408T-M08 F40M	15,0	0,13	0,14	0,19
H12	218.19-160T-04-MD11 F15M	SPMT100408T-M08 F40M	15,0	0,13	0,14	0,19
H21	218.19-160T-04-MD11 F15M	SPMT100408T-M08 F40M	13,0	0,10	0,11	0,14

SMG = Seco material group
f_z = mm/tooth
v_c= m/min
a_e/D_c = %
All cutting data are start values

R218.19-160 – Insert selection – Semi-finishing

SMG		a_p	f_z			
			15%	12%	10%	8%
P1	218.19-160T-04-M08 F40M	23,0	0,18	0,20	0,22	0,24
P2	218.19-160T-04-M08 F40M	23,0	0,19	0,20	0,22	0,24
P3	218.19-160T-04-M08 F40M	23,0	0,18	0,20	0,22	0,24
P4	218.19-160T-04-MD11 MP1500	23,0	0,24	0,26	0,28	0,32
P5	218.19-160T-04-MD11 MP1500	23,0	0,24	0,26	0,28	0,32
P6	218.19-160T-04-MD11 MP1500	23,0	0,24	0,26	0,28	0,30
P7	218.19-160T-04-MD11 MP1500	23,0	0,24	0,26	0,28	0,30
P8	218.19-160T-04-MD11 MP1500	23,0	0,24	0,26	0,30	0,32
P11	218.19-160T-04-MD11 MP1500	23,0	0,24	0,26	0,28	0,30
M1	218.19-160T-04-M08 F25M	23,0	0,19	0,20	0,22	0,24
M2	218.19-160T-04-M08 F25M	23,0	0,17	0,19	0,20	0,22
M3	218.19-160T-04-M08 F25M	19,0	0,15	0,16	0,18	0,19
M4	218.19-160T-04-M08 F25M	14,0	0,14	0,15	0,17	0,18
M5	218.19-160T-04-M08 F25M	14,0	0,14	0,15	0,17	0,18
K1	218.19-160T-04-MD11 F25M	23,0	0,26	0,28	0,32	0,34
K2	218.19-160T-04-MD11 F25M	23,0	0,24	0,26	0,28	0,32
K3	218.19-160T-04-MD11 F25M	23,0	0,24	0,26	0,28	0,32
K4	218.19-160T-04-MD11 F25M	23,0	0,24	0,26	0,28	0,32
K5	218.19-160T-04-MD11 F25M	23,0	0,22	0,24	0,26	0,28
K6	218.19-160T-04-MD11 F25M	23,0	0,24	0,26	0,28	0,32
K7	218.19-160T-04-MD11 F25M	23,0	0,22	0,24	0,26	0,28
N1	218.19-160-04-E07 H25	23,0	0,20	0,24	0,26	0,28
N2	218.19-160-04-E07 H25	23,0	0,20	0,24	0,26	0,28
N3	218.19-160-04-E07 H25	23,0	0,20	0,24	0,26	0,28
N11	218.19-160-04-E07 H25	23,0	0,20	0,24	0,26	0,28
S1	218.19-160T-04-M08 F40M	14,0	0,14	0,15	0,17	0,18
S2	218.19-160T-04-M08 F40M	14,0	0,14	0,15	0,17	0,18
S3	218.19-160T-04-M08 F40M	14,0	0,13	0,14	0,15	0,17
S11	218.19-160T-04-M08 MS2050	16,0	0,16	0,17	0,19	0,22
S12	218.19-160T-04-M08 MS2050	16,0	0,16	0,17	0,19	0,22
S13	218.19-160T-04-M08 MS2050	14,0	0,14	0,15	0,17	0,18
H5	218.19-160T-04-MD11 F15M	19,0	0,17	0,19	0,20	0,22
H8	218.19-160T-04-MD11 F15M	16,0	0,14	0,16	0,17	0,19
H11	218.19-160T-04-MD11 F15M	19,0	0,17	0,19	0,20	0,22
H12	218.19-160T-04-MD11 F15M	19,0	0,17	0,19	0,20	0,22
H21	218.19-160T-04-MD11 F15M	16,0	0,14	0,16	0,17	0,19

SMG = Seco material group
f_z = mm/tooth
v_c= m/min
a_e/D_c = %
All cutting data are start values

R218.19-160 – Cutting data v_c = (m/min)

	MP1500			MP2500			MP3000			F15M			T25M			F40M		
SMG	100%	30%	15%	100%	30%	15%	100%	30%	15%	100%	30%	15%	100%	30%	15%	100%	30%	15%
P1	400	490	550	355	435	485	395	490	550	325	395	440	350	430	480	320	390	440
P2	390	480	530	345	425	475	385	470	530	315	385	430	340	415	465	310	375	420
P3	345	420	470	305	370	415	335	410	460	275	335	380	295	360	405	265	330	370
P4	300	370	415	265	325	365	300	360	410	245	295	335	265	320	360	240	290	330
P5	290	355	395	255	315	350	285	350	390	230	290	320	250	310	345	230	280	315
P6	330	400	445	290	355	395	320	395	440	265	325	360	280	350	385	255	315	350
P7	310	380	420	275	335	370	305	375	415	250	305	340	265	330	365	240	300	330
P8	290	350	395	255	310	350	280	345	385	230	285	320	245	305	340	225	275	310
P11	300	370	405	265	325	360	295	365	405	245	295	330	260	320	355	235	290	325
M1	—	—	—	250	305	340	290	350	395	255	310	345	275	335	375	250	305	340
M2	—	—	—	205	255	280	240	295	325	210	260	285	225	280	310	205	255	280
M3	—	—	—	170	205	230	195	235	260	170	210	235	185	220	250	165	200	225
M4	—	—	—	130	165	180	150	185	205	130	165	185	140	175	195	130	160	175
M5	—	—	—	105	135	150	125	155	170	110	140	150	115	145	160	105	135	145
K1	310	380	425	275	335	375	305	370	415	250	305	340	—	—	—	245	295	335
K2	275	340	375	240	300	335	270	335	370	220	275	305	—	—	—	215	270	300
K3	230	285	320	205	255	280	230	285	315	185	230	255	—	—	—	185	225	250
K4	220	275	305	195	245	270	220	270	300	180	220	245	—	—	—	175	215	240
K5	135	170	185	120	150	165	135	165	185	110	135	150	—	—	—	105	130	150
K6	195	240	265	170	215	235	195	240	265	155	195	215	—	—	—	155	190	210
K7	175	215	235	155	190	210	170	210	235	140	175	190	—	—	—	135	170	190
N1	—	—	—	1000	1225	1400	1125	1375	1550	910	1125	1275	—	—	—	900	1100	1250
N2	—	—	—	800	990	1125	910	1100	1250	730	900	1025	—	—	—	730	890	1000
N3	—	—	—	540	660	750	610	740	830	490	600	680	—	—	—	485	590	670
N11	—	—	—	610	760	860	690	850	950	560	690	780	—	—	—	550	680	760
S1	—	—	—	65	80	85	70	85	95	60	75	85	65	80	90	60	75	80
S2	—	—	—	50	65	70	55	70	75	49	60	70	55	65	70	48	60	65
S3	—	—	—	45	55	60	49	60	65	43	55	60	46	60	65	42	55	60
S11	—	—	—	90	105	120	95	120	130	85	105	120	90	115	125	85	105	115
S12	—	—	—	50	60	70	55	70	75	50	60	70	55	65	70	48	60	65
S13	—	—	—	41	50	55	45	55	60	40	50	55	42	55	60	39	48	55
H5	65	80	90	50	65	70	60	70	80	50	65	70	—	—	—	50	60	70
H8	70	85	95	55	65	75	60	75	85	55	65	75	—	—	—	55	65	70
H11	85	100	115	65	80	90	75	90	100	65	80	90	—	—	—	65	80	85
H12	135	165	180	110	130	145	120	150	165	110	130	145	—	—	—	105	125	140
H21	70	85	95	55	65	75	60	75	85	55	65	75	—	—	—	55	65	70

R218.19-160 – Cutting data v_c = (m/min)

	MK2050			MS2050			MS2500			MH1000			H25		
SMG	100%	30%	15%	100%	30%	15%	100%	30%	15%	100%	30%	15%	100%	30%	15%
P1	350	430	480	345	400	420	460	560	630	390	480	530	—	—	—
P2	340	420	465	335	395	415	445	540	610	380	465	520	—	—	—
P3	300	365	410	290	335	355	385	475	530	335	405	460	—	—	—
P4	265	320	360	250	295	305	345	415	475	295	360	405	—	—	—
P5	250	310	345	240	275	290	330	405	450	280	350	385	—	—	—
P6	285	350	390	270	310	330	370	455	510	320	390	430	—	—	—
P7	270	330	365	255	290	310	350	430	480	300	370	410	—	—	—
P8	250	305	345	245	280	295	325	400	445	280	340	385	—	—	—
P11	265	320	355	245	285	300	340	420	465	295	360	395	—	—	—
M1	—	—	—	295	345	365	320	385	435	—	—	—	—	—	—
M2	—	—	—	235	270	285	265	325	360	—	—	—	—	—	—
M3	—	—	—	165	195	200	215	255	290	—	—	—	—	—	—
M4	—	—	—	115	125	135	165	205	225	—	—	—	—	—	—
M5	—	—	—	95	105	115	135	170	185	—	—	—	—	—	—
K1	370	450	500	340	395	420	355	430	480	300	370	410	—	—	—
K2	325	405	445	290	335	355	315	385	430	265	330	365	—	—	—
K3	275	340	380	245	280	300	265	325	365	225	280	310	—	—	—
K4	260	325	360	235	270	285	250	310	345	215	265	295	—	—	—
K5	160	200	220	135	155	160	155	190	215	135	165	180	—	—	—
K6	230	285	320	205	235	250	220	275	305	190	235	260	—	—	—
K7	205	255	280	175	200	205	195	240	270	170	210	230	—	—	—
N1	—	—	—	—	—	—	—	—	—	—	—	—	950	1175	1325
N2	—	—	—	—	—	—	—	—	—	—	—	—	770	950	1075
N3	—	—	—	—	—	—	—	—	—	—	—	—	510	630	710
N11	—	—	—	—	—	—	—	—	—	—	—	—	580	720	820
S1	—	—	—	70	80	85	80	100	110	—	—	—	—	—	—
S2	—	—	—	55	65	70	65	80	90	—	—	—	—	—	—
S3	—	—	—	48	60	60	55	70	80	—	—	—	—	—	—
S11	—	—	—	95	105	115	115	135	155	—	—	—	—	—	—
S12	—	—	—	70	80	90	65	80	90	—	—	—	—	—	—
S13	—	—	—	60	70	75	50	65	70	—	—	—	—	—	—
H5	—	—	—	—	—	—	65	80	90	65	75	85	—	—	—
H8	—	—	—	—	—	—	70	85	95	65	80	90	—	—	—
H11	—	—	—	—	—	—	85	100	115	80	100	110	—	—	—
H12	—	—	—	—	—	—	135	165	185	130	160	175	—	—	—
H21	—	—	—	—	—	—	70	85	95	65	80	90	—	—	—

R218.19-200 – Insert selection – Roughing

SMG		a_p	f_z		
			100%	30%	15%
P1	218.19-200T-05-M10 F40M	12,0	0,26	0,28	0,36
P2	218.19-200T-05-M10 F40M	12,0	0,26	0,28	0,36
P3	218.19-200T-05-M10 F40M	12,0	0,24	0,26	0,34
P4	218.19-200T-05-M10 F25M	12,0	0,24	0,26	0,34
P5	218.19-200T-05-M10 F25M	12,0	0,24	0,26	0,34
P6	218.19-200T-05-M10 F25M	12,0	0,24	0,26	0,32
P7	218.19-200T-05-M10 F25M	12,0	0,24	0,26	0,32
P8	218.19-200T-05-M10 F25M	12,0	0,24	0,26	0,34
P11	218.19-200T-05-M10 F25M	12,0	0,24	0,26	0,32
M1	218.19-200T-05-M10 F40M	12,0	0,26	0,28	0,36
M2	218.19-200T-05-M10 F40M	12,0	0,24	0,26	0,34
M3	218.19-200T-05-M10 F40M	10,0	0,19	0,20	0,26
M4	218.19-200T-05-M10 F40M	7,0	0,17	0,18	0,24
M5	218.19-200T-05-M10 F40M	7,0	0,17	0,18	0,24
K1	218.19-200T-05-M10 F25M	12,0	0,26	0,28	0,36
K2	218.19-200T-05-M10 F25M	12,0	0,24	0,26	0,34
K3	218.19-200T-05-M10 F25M	12,0	0,24	0,26	0,34
K4	218.19-200T-05-M10 F25M	12,0	0,24	0,26	0,34
K5	218.19-200T-05-M10 F25M	12,0	0,22	0,24	0,30
K6	218.19-200T-05-M10 F25M	12,0	0,24	0,26	0,34
K7	218.19-200T-05-M10 F25M	12,0	0,22	0,24	0,30
N1	218.19-200T-05-ME10 F40M	12,0	0,34	0,36	0,46
N2	218.19-200T-05-ME10 F40M	12,0	0,34	0,36	0,46
N3	218.19-200T-05-ME10 F40M	12,0	0,34	0,36	0,46
N11	218.19-200T-05-ME10 F40M	12,0	0,34	0,36	0,46
S1	218.19-200T-05-M10 F40M	7,0	0,17	0,18	0,24
S2	218.19-200T-05-M10 F40M	7,0	0,17	0,18	0,24
S3	218.19-200T-05-M10 F40M	7,0	0,15	0,17	0,22
S11	218.19-200T-05-M10 F40M	8,0	0,19	0,20	0,26
S12	218.19-200T-05-M10 F40M	8,0	0,19	0,20	0,26
S13	218.19-200T-05-M10 F40M	7,0	0,17	0,18	0,24
H5	218.19-200T-05-M10 F25M	10,0	0,16	0,18	0,22
H8	218.19-200T-05-M10 F25M	8,0	0,12	0,13	0,17
H11	218.19-200T-05-M10 F25M	10,0	0,16	0,18	0,22
H12	218.19-200T-05-M10 F25M	10,0	0,16	0,18	0,22
H21	218.19-200T-05-M10 F25M	8,0	0,12	0,13	0,17

SMG = Seco material group
f_z = mm/tooth
v_c= m/min
a_e/D_c = %
All cutting data are start values

R218.19-200 – Insert selection – Semi-finishing

SMG		a_p	f_z			
			15%	12%	10%	8%
P1	218.19-200T-05-M10 F40M	12,0	0,36	0,40	0,44	0,48
P2	218.19-200T-05-M10 F40M	12,0	0,36	0,40	0,44	0,48
P3	218.19-200T-05-M10 F40M	12,0	0,34	0,38	0,42	0,46
P4	218.19-200T-05-M10 F25M	12,0	0,34	0,38	0,40	0,46
P5	218.19-200T-05-M10 F25M	12,0	0,34	0,36	0,40	0,44
P6	218.19-200T-05-M10 F25M	12,0	0,32	0,36	0,40	0,44
P7	218.19-200T-05-M10 F25M	12,0	0,32	0,36	0,40	0,44
P8	218.19-200T-05-M10 F25M	12,0	0,34	0,38	0,42	0,46
P11	218.19-200T-05-M10 F25M	12,0	0,32	0,36	0,40	0,44
M1	218.19-200T-05-M10 F25M	12,0	0,36	0,40	0,44	0,48
M2	218.19-200T-05-M10 F25M	12,0	0,34	0,36	0,40	0,44
M3	218.19-200T-05-M10 F25M	10,0	0,26	0,30	0,32	0,36
M4	218.19-200T-05-M10 F25M	7,0	0,24	0,26	0,28	0,30
M5	218.19-200T-05-M10 F25M	7,0	0,24	0,26	0,28	0,30
K1	218.19-200T-05-M10 F25M	12,0	0,36	0,40	0,44	0,48
K2	218.19-200T-05-M10 F25M	12,0	0,34	0,36	0,40	0,44
K3	218.19-200T-05-M10 F25M	12,0	0,34	0,36	0,40	0,44
K4	218.19-200T-05-M10 F25M	12,0	0,34	0,36	0,40	0,44
K5	218.19-200T-05-M10 F25M	12,0	0,30	0,32	0,36	0,40
K6	218.19-200T-05-M10 F25M	12,0	0,34	0,36	0,40	0,44
K7	218.19-200T-05-M10 F25M	12,0	0,30	0,32	0,36	0,40
N1	218.19-200T-05-ME10 F40M	12,0	0,46	0,50	0,55	0,60
N2	218.19-200T-05-ME10 F40M	12,0	0,46	0,50	0,55	0,60
N3	218.19-200T-05-ME10 F40M	12,0	0,46	0,50	0,55	0,60
N11	218.19-200T-05-ME10 F40M	12,0	0,46	0,50	0,55	0,60
S1	218.19-200T-05-M10 F40M	7,0	0,24	0,26	0,28	0,30
S2	218.19-200T-05-M10 F40M	7,0	0,24	0,26	0,28	0,30
S3	218.19-200T-05-M10 F40M	7,0	0,22	0,24	0,26	0,28
S11	218.19-200T-05-M10 F40M	8,0	0,26	0,30	0,32	0,36
S12	218.19-200T-05-M10 F40M	8,0	0,26	0,30	0,32	0,36
S13	218.19-200T-05-M10 F40M	7,0	0,24	0,26	0,28	0,30
H5	218.19-200T-05-M10 F25M	10,0	0,22	0,24	0,26	0,30
H8	218.19-200T-05-M10 F25M	8,0	0,17	0,19	0,20	0,22
H11	218.19-200T-05-M10 F25M	10,0	0,22	0,24	0,26	0,30
H12	218.19-200T-05-M10 F25M	10,0	0,22	0,24	0,26	0,30
H21	218.19-200T-05-M10 F25M	8,0	0,17	0,19	0,20	0,22

SMG = Seco material group
f_z = mm/tooth
v_c= m/min
a_e/D_c = %
All cutting data are start values

R218.19-200 – Cutting data v_c = (m/min)

SMG	F25M			F40M		
	100%	30%	15%	100%	30%	15%
P1	320	390	435	295	355	395
P2	315	380	425	285	345	385
P3	275	335	370	250	305	335
P4	245	295	325	220	265	295
P5	230	280	310	210	255	285
P6	260	315	355	235	285	325
P7	245	295	335	225	270	305
P8	230	280	310	210	255	285
P11	240	290	325	215	260	295
M1	255	305	340	230	275	310
M2	210	250	280	190	230	255
M3	170	210	230	155	190	210
M4	130	160	175	120	145	160
M5	110	135	145	100	120	135
K1	250	300	335	225	275	305
K2	220	265	295	200	240	270
K3	185	225	250	170	205	230
K4	180	215	240	160	195	215
K5	110	130	145	100	120	135
K6	155	190	210	145	170	190
K7	140	165	190	125	150	170
N1	910	1100	1225	820	1000	1125
N2	730	890	1000	670	810	910
N3	490	590	660	445	540	600
N11	560	680	760	510	610	690
S1	60	75	80	55	70	75
S2	49	60	65	45	55	60
S3	44	55	60	40	48	55
S11	85	105	115	80	95	105
S12	50	60	65	45	55	60
S13	40	49	55	36	44	48
H5	50	60	70	47	55	65
H8	55	70	75	50	60	70
H11	65	80	90	60	75	80
H12	105	130	145	100	115	130
H21	55	70	75	50	60	70

R217.97

Cavity milling in aluminium

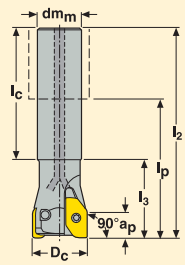

- For insert selection and cutting data recommendations, see page(s) 400
- For complete insert programme, see page(s) 643
- For helical interpolation, see page(s) 682-683

Part No.	Type of mounting	Dimensions in mm							α° max		KG		Insert
		a_p	D_c	dm_m	l_2	l_3	l_p	l_c					
R217.97 -2525.0-X12.2A	Cylindrical	7,5	25	25	150	54,5	94	95	10	2	0,5	40000	XP..12
R217.97 -3232.0-X12.2A	Cylindrical	7,5	32	32	150	64,5	90	85	8	2	0,8	40000	XP..12
-3232.0-X12.3A	Cylindrical	7,5	32	32	150	64,5	90	85	8	3	0,8	40000	XP..12

Spare Parts

For cutter	Insert screw	Insert key
Dia 25	C03508-T10P	T10P-3
Dia 32	C03509-T10P	T10P-3

Please check availability in current price and stock-list

Torque value 2,0 Nm, Torque keys, see page 690

R217/220.97-X12

Cavity milling in aluminium

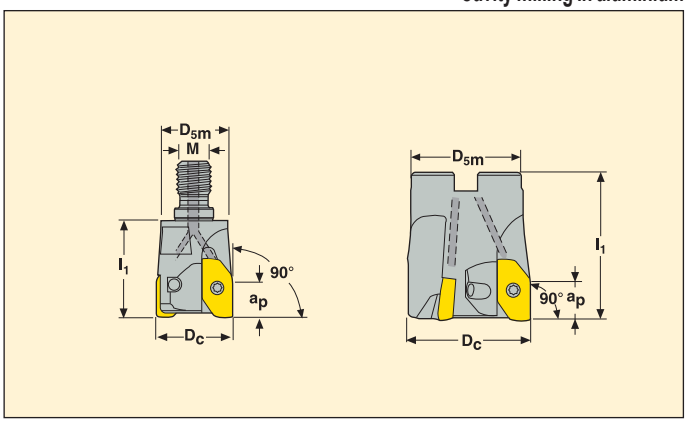

- For insert selection and cutting data recommendations, see page(s) 400
- For complete insert programme, see page(s) 643
- For helical interpolation, see page(s) 682-683

Part No.	Type of mounting	Dimensions in mm						α° max		KG		Insert
		a_p	D_c	D_{5m}	dm_m	l_1	M					
R217.97 -1225.RE-X12.2A	Combimaster	7,5	25	23	–	30	M12	10	2	0,1	40000	XP..12
R217.97 -1632.RE-X12.2A	Combimaster	7,5	32	30	–	40	M16	8	2	0,2	40000	XP..12
-1632.RE-X12.3A	Combimaster	7,5	32	30	–	40	M16	8	3	0,2	40000	XP..12
R217.97 -1640.RE-X12.3A	Combimaster	7,5	40	30	–	40	M16	6	3	0,3	35000	XP..12
R217.97 -2040.RE-X12.3A	Combimaster	7,5	40	36,5	–	40	M20	6	3	0,3	35000	XP..12
R220.97 -0050-X12.4A	Arbor	7,5	50	47	22	45	–	5	4	0,4	30000	XP..12

Spigot size = dm_m

For Combimaster shanks and dimensions, see pages 588-598

Spare Parts

For cutter	Insert screw	Insert key	Arbor screw
R217.97-.. Ø25	C03508-T10P	T10P-3	–
R217.97-.. Ø32-40	C03509-T10P	T10P-3	–
R220.97-0050	C03509-T10P	T10P-3	220.17-692

Please check availability in current price and stock-list

Torque value 2,0 Nm, Torque keys, see page 690

R217.97

Cavity milling in aluminium

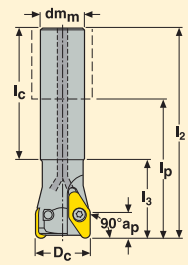

- For insert selection and cutting data recommendations, see page(s) 401
- For complete insert programme, see page(s) 636
- For helical interpolation, see page(s) 682-683

Part No.	Type of mounting	Dimensions in mm							α° max		KG		Insert
		a_p	D_c	dm_m	l_2	l_3	l_p	l_c					
R217.97 -2532.0-V22.2A	Cylindrical	10	32	25	120	64	64	75	15	2	0,4	40000	VPGX2206
R217.97 -3240.0-V22.2A	Cylindrical	10	40	32	150	90	90	105	10	2	0,9	35000	VPGX2206

Spare Parts

For cutter	Insert screw	Insert key
		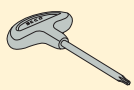
R217.97-..	C05010-T20P	T20P-4

Please check availability in current price and stock-list
Torque value 5,0 Nm, Torque keys, see page 690

R217/220.97-V22

Cavity milling in aluminium

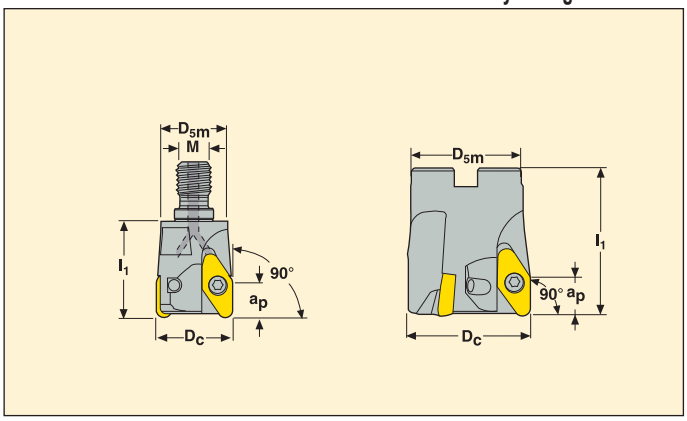

- For insert selection and cutting data recommendations, see page(s) 401
- For complete insert programme, see page(s) 636
- For helical interpolation, see page(s) 682-683

Part No.	Type of mounting	Dimensions in mm a_p	D_c	D_{5m}	dm_m	l_1	M	α° max		KG		Insert
R217.97 -1632.RE-V22.2A	Combimaster	10	32	30	–	40	M16	15	2	0,2	40000	VPGX2206
R217.97 -1640.RE-V22.2A	Combimaster	10	40	30	–	40	M16	10	2	0,2	35000	VPGX2206
R217.97 -2040.RE-V22.2A	Combimaster	10	40	36,5	–	45	M20	10	2	0,3	35000	VPGX2206
R220.97 -0050-V22.2A	Arbor	10	50	47	22	57	–	8	2	0,5	30000	VPGX2206
-0050-V22.3A	Arbor	10	50	47	22	57	–	8	3	0,5	30000	VPGX2206
R220.97 -0063-V22.3A	Arbor	10	63	50	27	57	–	6	3	0,6	27000	VPGX2206
-0063-V22.4A	Arbor	10	63	50	27	57	–	6	4	0,6	27000	VPGX2206
R220.97 -0080-V22.4A	Arbor	10	80	60	32	57	–	5	4	1,0	25000	VPGX2206
R220.97 -0100-V22.5A	Arbor	10	100	77	32	57	–	4	5	1,7	22000	VPGX2206

Spigot size = dm_m

For Combimaster shanks and dimensions, see pages 588-598

Spare Parts

For cutter	Insert screw	Insert key	Arbor screw
R217.97-1632-1640	C05010-T20P	T20P-4	–
R217.97-2040	C05010-T20P	T20P-3	–
R220.97-0050	C05010-T20P	T20P-4	MC6S10X40
R220.97-0063	C05013-T20P	T20P-4	MC6S12X35
R220.97-0080-0100	C05013-T20P	T20P-4	220.17-694

Please check availability in current price and stock-list

Torque value 5,0 Nm, Torque keys, see page 690

R217/220.97-X12 – Insert selection

SMG		a_p	f_z			
			100%	30%	10%	5%
N1	XPKX12T304PDER-E08 H25	3,5	0,13	0,14	0,22	0,30
N2	XPKX12T304PDER-E08 H25	3,5	0,13	0,14	0,22	0,30
N3	XPKX12T304PDER-E08 H25	3,5	0,13	0,14	0,22	0,30
N11	XPKX12T304PDER-E08 H25	3,5	0,13	0,14	0,22	0,30
S11	XPKX12T304PDER-E08 H25	2,5	0,075	0,080	0,12	0,17
S12	XPKX12T304PDER-E08 H25	2,5	0,075	0,080	0,12	0,17

SMG = Seco material group
f_z = mm/tooth
v_c= m/min
a_e/D_c = %
All cutting data are start values

R217/220.97-X12 – Cutting data v_c = (m/min)

SMG	H25			
	100%	30%	10%	5%
N1	690	910	1075	1175
N2	550	740	870	950
N3	370	495	580	640
N11	420	560	660	730
S11	40	55	65	70
S12	31	41	49	55

R217/220.97-V22 – Insert selection

SMG		a_p	f_z			
			100%	30%	10%	5%
N1	VPGX220605ER-E10 H25	5,0	0,18	0,20	0,30	0,42
N2	VPGX220605ER-E10 H25	5,0	0,18	0,20	0,30	0,42
N3	VPGX220605ER-E10 H25	5,0	0,18	0,20	0,30	0,42
N11	VPGX220605ER-E10 H25	5,0	0,18	0,20	0,30	0,42
S11	VPGX220605ER-E10 H25	3,5	0,10	0,11	0,18	0,24
S12	VPGX220605ER-E10 H25	3,5	0,10	0,11	0,18	0,24

SMG = Seco material group
f_z = mm/tooth
v_c= m/min
a_e/D_c = %
All cutting data are start values

R217/220.97-V22 – Cutting data v_c = (m/min)

SMG	H15				H25			
	100%	30%	10%	5%	100%	30%	10%	5%
N1	740	990	1175	1275	640	850	1025	1100
N2	600	800	950	1025	520	690	820	900
N3	400	530	630	680	345	460	550	600
N11	455	610	720	780	395	530	630	680
S11	—	—	—	—	39	50	60	65
S12	—	—	—	—	30	40	47	50

High feed milling cutters

Insert	a_p max	Material suitability									
		P	M	K	N	S	H				
LP05	0,5	■	■	■	□	■	■	■	□	■	■
LP06	0,8	■	■	■	■	■	■	■	□	■	■
LO06	0,8	■	◪	■	–	■	■	■	■	◪	◪
218.19-100	0,7	■	◪	■	■	◪	■	■	◪	■	■
218.19-125	1	■	◪	■	■	◪	■	◪	■	■	■
218.19-160	1,8	■	◪	■	■	◪	□	-	■	■	■
218.19-160C	2,5	■	◪	■	■	◪	□	-	■	-	□
SCET	2	■	■	■	-	■	-	-	■	□	■
ON09	2	■	-	■	-	-	-	-	■	-	-

1st choice	■	High speed machine with low power/torque		Unstable condition suitability			
Alternative choice	◪	Strong stable machine with rigid connection		Ramping ability			
Possible choice	□	a_p max	Max depth of cut	Plunging ability			
Not recommended	-						

High feed milling cutters

No. of insert cutting edges	Application	Cutter diameter available (mm) / number of teeth																									Page
		12	14	16	18	20	25	27	32	35	40	42	50	52	63	66	80	84	88	100	108	125	133	160	168	208	
2				2		3																					405-406
		2	2	3	3	4																					
2						2	3	3	4	4																	409-410
				2	2	3	4		5	5	6																
4						2	3	3	4	5	5																413-414
							4		5	6	6/7	7	8	8	9												
3									2																		417-419
								2	3																		
3									2																		
							2		3	3	4	4															
3													3		4												
											3		4	4	5	5	6			7							
3																			5		6		8		10	12	428
4															4	4	5	5		5		6		7			431
													4	4	5		6			7							
16																	6			7		8		10			434

x	x indicates number of teeth (first choice)
x	x indicates number of teeth

Troubleshooter for unstable fixturing and/or machine

Basic choice

Milling cutters

In milling Seco uses product specific designation systems, there is no ISO system available for cutters. See example below.

Code key for High feed milling cutter 217/220.21

Right hand rotation | System | Cutter diameter | Insert type and size | No. of teeth

R 217 . 21 - 12 25 . RE - LP06 . 4 A

217 = With shank
220 = For arbor

Connecting diameter

Shank type
.RE for Combimaster
.0 for Cylindrical
.3 for Weldon
.3S for Seco Weldon

A = Through coolant supply
E = Solid carbide shank

Dimensions of mounting

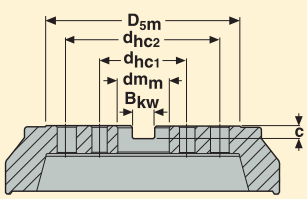

Dimensions in mm						Spindle-nose
D_{5m}	dm_m	B_{kw}	c	d_{hc1}	d_{hc2}	
30-35	16	8,4	5,6	–	–	–
42-47	22	10,4	6.3	–	–	–
48-62	27	12,4	7	–	–	–
60-90	32	14,4	8	–	–	–
90-130	40	16,4	9	66,7	–	(8xxx)
130-270	60	25,7	14	101,6	177,8	(8xxx)

For a more exact D_{5m} and dm_m measurement, see each product table.

R217.21

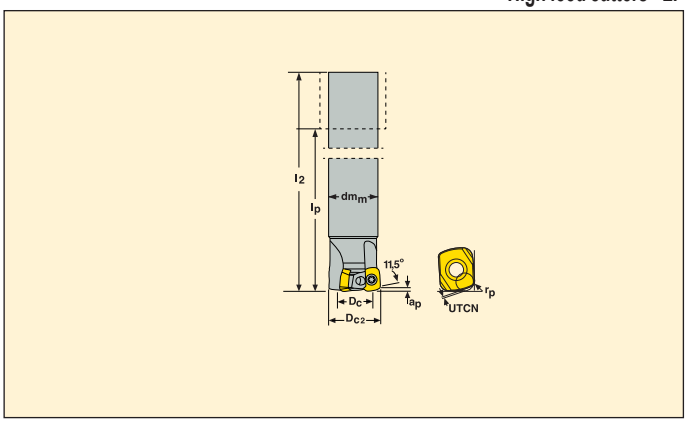

- For insert selection and cutting data recommendations, see page(s) 407-408
- For complete insert programme, see page(s) 609
- For helical interpolation, see page 683

Part No.	Type of mounting	Dimensions in mm								α° max		KG		Insert
		a_p	D_{c2}	D_c	dm_m	l_2	l_p	UTCN	r_p					
R217.21 -1012.0-LP05.2A	Cylindrical	0,65	12	5,4	10	100	60	0,32	1,5	3,9	2	0,1	45000	LP..05
R217.21 -1214.0-LP05.2A	Cylindrical	0,65	14	7,4	12	120	75	0,32	1,5	3,5	2	0,1	42000	LP..05
R217.21 -1416.0-LP05.2A	Cylindrical	0,65	16	9,4	14	150	105	0,32	1,5	3	2	0,2	39000	LP..05
R217.21 -1618.0-LP05.3A	Cylindrical	0,65	18	11,4	16	160	112	0,32	1,5	2,2	3	0,3	37000	LP..05
R217.21 -1820.0-LP05.3A	Cylindrical	0,65	20	13,4	18	160	112	0,32	1,5	1,9	3	0,3	35000	LP..05

UTCN = Uncut thickness, deviation between programmed corner radii (r_p) and generated machined profile.
Ramping angle = α°

Spare Parts

For cutter	Insert screw	Insert key
		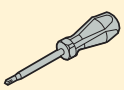
R217.21-..	C02053-T06P	T06P-3

Please check availability in current price and stock-list
Torque value 1,2 Nm, Torque keys, see page 690

R217/220.21

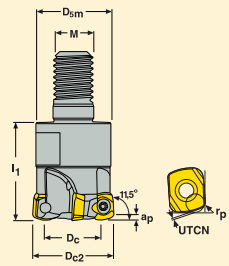

- For insert selection and cutting data recommendations, see page(s) 407-408
- For complete insert programme, see page(s) 609
- For helical interpolation, see page 683

Part No.	Type of mounting	Dimensions in mm a_p	D_{c2}	D_c	D_{5m}	M	l_1	UTCN	r_p	α° max		KG		Insert
R217.21 -0612.RE-LP05.2A	Combimaster	0,65	12	5,4	11	M6	18	0,32	1,5	3,9	2	0,1	45000	LP..05
-0812.RE-LP05.2A	Combimaster	0,65	12	5,4	13,5	M8	20	0,32	1,5	3,9	2	0,1	45000	LP..05
R217.21 -0614.RE-LP05.2A	Combimaster	0,65	14	7,4	11	M6	18	0,32	1,5	3,5	2	0,1	42000	LP..05
-0814.RE-LP05.2A	Combimaster	0,65	14	7,4	13,5	M8	20	0,32	1,5	3,5	2	0,1	42000	LP..05
R217.21 -0816.RE-LP05.3A	Combimaster	0,65	16	9,4	13,5	M8	20	0,32	1,5	3	3	0,1	39000	LP..05
R217.21 -1020.RE-LP05.4A	Combimaster	0,65	20	13,4	18,5	M10	23	0,32	1,5	1,9	4	0,1	35000	LP..05

UTCN = Uncut thickness, deviation between programmed corner radii (r_p) and generated machined profile. For Combimaster shanks and dimensions, see pages 588-598
Ramping angle = α°

Spare Parts

For cutter	Insert screw	Insert key
Dia 12	C02005-T06P	T06P-3
Dia 14-20	C02053-T06P	T06P-3

Please check availability in current price and stock-list
Torque value 1,2 Nm, Torque keys, see page 690

R217/220.21-LP05 – Insert selection

SMG		a_p	f_z		
			100%	70%	30%
P1	LPHT05T210TR-ME04 T350M	0,65	0,42	0,42	0,46
P2	LPHT05T210TR-ME04 T350M	0,65	0,42	0,42	0,48
P3	LPHT05T210TR-ME04 T350M	0,65	0,40	0,40	0,44
P4	LPKT05T210TR-M05 MP2500	0,65	0,50	0,50	0,55
P5	LPKT05T210TR-M05 MP2500	0,65	0,50	0,50	0,55
P6	LPKT05T210TR-M05 MP2500	0,65	0,48	0,48	0,55
P7	LPKT05T210TR-M05 MP2500	0,65	0,48	0,48	0,55
P8	LPKW05T210TR-MD05 MP2500	0,65	0,50	0,50	0,55
P11	LPKT05T210TR-M05 MP2500	0,65	0,48	0,48	0,55
M1	LPKT05T210TR-M05 F40M	0,65	0,55	0,55	0,60
M2	LPKT05T210TR-M05 F40M	0,65	0,50	0,50	0,55
M3	LPKT05T210TR-M05 F40M	0,50	0,44	0,44	0,50
M4	LPKT05T210TR-M05 F40M	0,39	0,44	0,44	0,48
M5	LPKT05T210TR-M05 F40M	0,39	0,44	0,44	0,48
K1	LPKW05T210TR-MD05 MP2500	0,65	0,55	0,55	0,60
K2	LPKW05T210TR-MD05 MP2500	0,65	0,50	0,50	0,55
K3	LPKW05T210TR-MD05 MP2500	0,65	0,50	0,50	0,55
K4	LPKW05T210TR-MD05 MP2500	0,65	0,50	0,50	0,55
K5	LPKW05T210TR-MD05 MP2500	0,65	0,44	0,44	0,48
K6	LPKW05T210TR-MD05 MP2500	0,65	0,50	0,50	0,55
K7	LPKW05T210TR-MD05 MP2500	0,65	0,44	0,44	0,48
N1	LPHT05T210TR-ME04 F40M	0,65	0,55	0,55	0,60
N2	LPHT05T210TR-ME04 F40M	0,65	0,55	0,55	0,60
N3	LPHT05T210TR-ME04 F40M	0,65	0,55	0,55	0,60
N11	LPHT05T210TR-ME04 F40M	0,65	0,55	0,55	0,60
S1	LPHT05T210TR-ME04 F40M	0,39	0,36	0,36	0,38
S2	LPHT05T210TR-ME04 F40M	0,39	0,36	0,36	0,38
S3	LPKT05T210TR-M05 F40M	0,39	0,42	0,42	0,46
S11	LPHT05T210TR-ME04 MS2050	0,44	0,38	0,38	0,42
S12	LPHT05T210TR-ME04 MS2050	0,44	0,38	0,38	0,42
S13	LPHT05T210TR-ME04 MS2050	0,39	0,36	0,36	0,38
H5	LPHW05T210TR-MD05 MH1000	0,40	0,36	0,36	0,40
H8	LPHW05T210TR-MD05 MH1000	0,35	0,30	0,30	0,32
H11	LPKT05T210TR-M05 F40M	0,40	0,36	0,36	0,40
H12	LPKT05T210TR-M05 F40M	0,40	0,36	0,36	0,40
H21	LPHW05T210TR-MD05 MH1000	0,35	0,30	0,30	0,32

SMG = Seco material group
f_z = mm/tooth
v_c= m/min
a_e/D_c = %
All cutting data are start values

R217/220.21-LP05 – Cutting data v_c = (m/min)

	MP2500			MP3000			T350M			F40M			MM4500			MS2050		
SMG	100%	70%	30%	100%	70%	30%	100%	70%	30%	100%	70%	30%	100%	70%	30%	100%	70%	30%
P1	330	390	475	310	370	450	320	380	455	250	295	360	225	265	320	295	335	330
P2	320	380	460	305	360	440	310	370	440	245	290	350	220	260	310	285	325	330
P3	285	335	405	270	320	385	270	320	385	215	255	310	190	225	270	245	275	270
P4	250	295	360	235	280	340	235	280	340	190	225	270	165	200	240	215	245	240
P5	240	285	340	225	270	325	225	270	330	180	215	260	160	190	230	205	230	220
P6	270	320	385	255	305	365	260	305	370	205	245	290	180	215	260	225	255	250
P7	255	305	360	240	285	345	245	290	345	195	230	275	170	205	245	215	240	235
P8	240	285	340	225	270	325	225	270	325	180	215	260	160	190	230	205	230	225
P11	245	295	350	235	280	335	235	280	335	185	225	265	165	200	240	210	235	230
M1	230	275	335	225	270	325	240	285	340	195	235	280	185	225	265	250	285	285
M2	190	230	275	190	225	270	195	230	280	160	195	235	155	180	220	200	225	215
M3	155	185	220	155	180	215	155	185	220	130	155	185	125	145	175	140	155	145
M4	120	140	170	120	140	165	120	140	170	100	120	145	95	110	135	95	110	95
M5	100	115	140	100	115	140	100	120	140	85	100	120	80	95	110	80	90	80
K1	255	300	365	240	285	345	—	—	—	190	230	275	—	—	—	—	—	—
K2	225	270	325	215	255	305	—	—	—	170	205	245	—	—	—	—	—	—
K3	190	225	275	180	215	260	—	—	—	145	170	210	—	—	—	—	—	—
K4	180	215	260	170	205	250	—	—	—	140	165	200	—	—	—	—	—	—
K5	110	135	160	105	125	150	—	—	—	85	100	120	—	—	—	—	—	—
K6	160	190	230	150	180	220	—	—	—	120	145	175	—	—	—	—	—	—
K7	145	170	205	135	160	195	—	—	—	110	130	155	—	—	—	—	—	—
N1	—	—	—	—	—	—	—	—	—	710	850	1025	—	—	—	—	—	—
N2	—	—	—	720	860	1050	—	—	—	580	680	840	—	—	—	—	—	—
N3	—	—	—	480	570	700	—	—	—	385	455	560	—	—	—	—	—	—
N11	—	—	—	—	—	—	—	—	—	440	520	640	—	—	—	—	—	—
S1	—	—	—	55	65	75	55	65	80	47	55	65	29	34	41	60	65	80
S2	—	—	—	44	50	60	45	55	65	38	45	55	23	27	33	47	55	65
S3	—	—	—	39	45	55	40	47	55	33	39	47	21	24	29	43	48	55
S11	—	—	—	75	90	105	80	95	110	65	80	95	41	48	55	80	90	110
S12	—	—	—	44	50	60	46	55	65	38	45	55	31	37	44	60	70	85
S13	—	—	—	36	42	50	36	43	50	31	36	43	25	29	35	50	55	70
H5	50	60	70	49	55	70	50	60	70	42	49	60	—	—	—	—	—	—
H8	50	60	75	50	60	70	55	65	75	44	50	60	—	—	—	—	—	—
H11	65	75	90	60	75	85	65	75	90	55	60	75	—	—	—	—	—	—
H12	95	110	135	95	110	130	100	115	140	80	95	110	—	—	—	—	—	—
H21	50	60	75	50	60	70	55	65	75	44	50	60	—	—	—	—	—	—

R217/220.21-LP05 – Cutting data v_c = (m/min)

	MS2500			MH1000		
SMG	100%	70%	30%	100%	70%	30%
P1	360	425	520	—	—	—
P2	350	415	500	—	—	—
P3	310	365	445	—	—	—
P4	270	325	390	—	—	—
P5	260	310	370	—	—	—
P6	295	350	420	—	—	—
P7	275	330	395	—	—	—
P8	260	310	370	—	—	—
P11	270	320	385	—	—	—
M1	250	300	360	—	—	—
M2	205	245	300	—	—	—
M3	170	200	235	—	—	—
M4	130	150	185	—	—	—
M5	110	125	150	—	—	—
K1	—	—	—	255	305	370
K2	—	—	—	230	270	330
K3	—	—	—	195	230	280
K4	—	—	—	185	220	265
K5	—	—	—	115	135	165
K6	—	—	—	165	195	235
K7	—	—	—	145	175	210
N1	—	—	—	—	—	—
N2	—	—	—	—	—	—
N3	—	—	—	—	—	—
N11	—	—	—	—	—	—
S1	65	75	90	—	—	—
S2	50	60	70	—	—	—
S3	45	50	65	—	—	—
S11	90	105	125	—	—	—
S12	50	60	70	—	—	—
S13	41	48	60	—	—	—
H5	—	—	—	55	65	80
H8	—	—	—	60	70	80
H11	—	—	—	70	85	100
H12	—	—	—	105	125	150
H21	—	—	—	60	70	80

R217.21

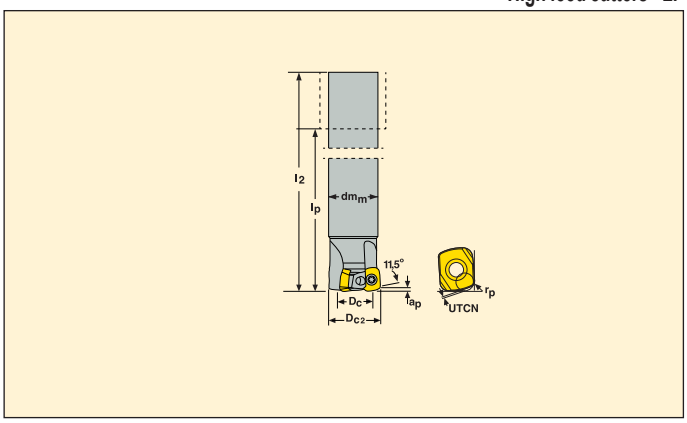

- For insert selection and cutting data recommendations, see page(s) 411-412
- For complete insert programme, see page(s) 609
- For helical interpolation, see page 683

Part No.	Type of mounting	Dimensions in mm								α° max		KG		Insert
		a_p	D_{c2}	D_c	dm_m	l_2	l_p	UTCN	r_p					
R217.21 -1416.0-LP06.2A	Cylindrical	0,8	16	7,5	14	150	102	0,45	1,8	5	2	0,4	39000	LP..06
R217.21 -1618.0-LP06.2A	Cylindrical	0,8	18	9,5	16	160	112	0,45	1,8	3,5	2	0,4	37000	LP..06
R217.21 -1820.0-LP06.2A	Cylindrical	0,8	20	11,6	18	160	110	0,45	1,8	3	2	0,4	35000	LP..06
R217.21 -2525.0-LP06.3A	Cylindrical	0,8	25	16,5	25	180	124	0,45	1,8	2	3	0,4	30000	LP..06
R217.21 -2527.0-LP06.3A	Cylindrical	0,8	27	18,5	25	250	194	0,45	1,8	1,5	3	0,4	30000	LP..06
R217.21 -3232.0-LP06.4A	Cylindrical	0,8	32	23,5	32	200	140	0,45	1,8	1,5	4	0,4	27000	LP..06
R217.21 -3235.0-LP06.4A	Cylindrical	0,8	35	26,5	32	250	190	0,45	1,8	1,2	4	0,4	26000	LP..06

UTCN = Uncut thickness, deviation between programmed corner radii (r_p) and generated machined profile.
Ramping angle = α°

Spare Parts

For cutter	Insert screw	Insert key
		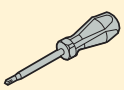
Dia 16-20	C02555-T08P	T08P-3
Dia 25-35	C02506-T08P	T08P-3

Please check availability in current price and stock-list
Torque value 1,2 Nm, Torque keys, see page 690

R217/220.21-LP06

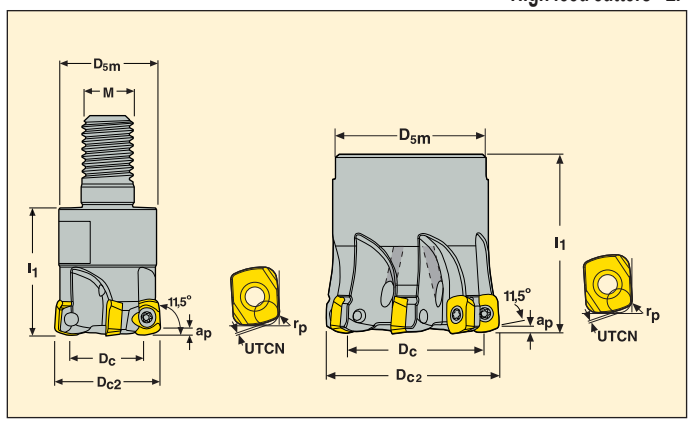

- For insert selection and cutting data recommendations, see page(s) 411-412
- For complete insert programme, see page(s) 609
- For helical interpolation, see page 683

Part No.	Type of mounting	Dimensions in mm a_p	D_{c2}	D_c	D_{5m}	dm_m	M	l_1	UTCN	r_p	α° max		KG		Insert
R217.21 -0816.RE-LP06.2A	Combimaster	0,8	16	7,5	13,5	–	M8	20	0,45	1,8	5	2	0,3	39000	LP..06
R217.21 -1020.RE-LP06.2A	Combimaster	0,8	20	11,5	18,5	–	M10	28	0,45	1,8	3	2	0,3	35000	LP..06
-1020.RE-LP06.3A	Combimaster	0,8	20	11,5	18,5	–	M10	28	0,45	1,8	3	3	0,4	35000	LP..06
R217.21 -1225.RE-LP06.3A	Combimaster	0,8	25	16,5	23	–	M12	30	0,45	1,8	2	3	0,3	30000	LP..06
-1225.RE-LP06.4A	Combimaster	0,8	25	16,5	23	–	M12	30	0,45	1,8	2	4	0,4	30000	LP..06
R217.21 -1632.RE-LP06.5A	Combimaster	0,8	32	23,5	30	–	M16	35	0,45	1,8	1,5	5	0,2	27000	LP..06
R217.21 -1635.RE-LP06.5A	Combimaster	0,8	35	26,5	30	–	M16	35	0,45	1,8	1,5	5	0,3	26000	LP..06
R220.21 -0035-LP06.6A	Arbor	0,8	35	26,5	32	16	–	35	0,45	1,8	1,29	6	0,4	26000	LP..06
R217.21 -2040.RE-LP06.7A	Combimaster	0,8	40	31,5	36,5	–	M20	40	0,45	1,8	0,9	7	0,4	24000	LP..06
R220.21 -0040-LP06.6A	Arbor	0,8	40	31,5	32	16	–	40	0,45	1,8	0,9	6	0,2	24000	LP..06

UTCN = Uncut thickness, deviation between programmed corner radii (r_p) and generated machined profile.
Ramping angle = α°. Spigot size = dm_m

For Combimaster shanks and dimensions, see pages 572-581 MN2015 Milling

Spare Parts

For cutter	Insert screw	Insert key	Arbor screw
Dia 16-20	C02555-T08P	T08P-3	–
Dia 25-40	C02506-T08P	T08P-3	–
R220.21-..	C02506-T08P	T08P-3	220.17-689

Please check availability in current price and stock-list
Torque value 1,2 Nm, Torque keys, see page 690

R217/220.21-LP06 – Insert selection

SMG		a_p	f_z		
			100%	70%	30%
P1	LPHT060310TR-M06 T350M	0,80	0,65	0,65	0,70
P2	LPHT060310TR-M06 T350M	0,80	0,65	0,65	0,70
P3	LPHT060310TR-M06 T350M	0,80	0,60	0,60	0,70
P4	LPHT060310TR-M06 MP2500	0,80	0,60	0,60	0,65
P5	LPHT060310TR-M06 MP2500	0,80	0,60	0,60	0,65
P6	LPHT060310TR-M06 MP2500	0,80	0,60	0,60	0,65
P7	LPHW060310TR-MD07 MP2500	0,80	0,70	0,70	0,75
P8	LPHW060310TR-MD07 MP2500	0,80	0,70	0,70	0,80
P11	LPHW060310TR-MD07 MP2500	0,80	0,70	0,70	0,75
M1	LPHT060310TR-ME05 F40M	0,80	0,55	0,55	0,60
M2	LPHT060310TR-ME05 F40M	0,80	0,50	0,50	0,55
M3	LPHT060310TR-ME05 F40M	0,65	0,60	0,60	0,70
M4	LPHT060310TR-M06 F40M	0,48	0,55	0,55	0,60
M5	LPHT060310TR-M06 F40M	0,48	0,55	0,55	0,60
K1	LPHW060310TR-D06 MP3000	0,80	0,65	0,65	0,70
K2	LPHW060310TR-D06 MP3000	0,80	0,60	0,60	0,65
K3	LPHW060310TR-D06 MP3000	0,80	0,60	0,60	0,65
K4	LPHW060310TR-D06 MP3000	0,80	0,60	0,60	0,65
K5	LPHW060310TR-D06 MP3000	0,80	0,55	0,55	0,60
K6	LPHW060310TR-D06 MP3000	0,80	0,60	0,60	0,65
K7	LPHW060310TR-D06 MP3000	0,80	0,55	0,55	0,60
N1	LPHT060310ER-E05 H25	0,80	0,70	0,70	0,75
N2	LPHT060310ER-E05 H25	0,80	0,70	0,70	0,75
N3	LPHT060310ER-E05 H25	0,80	0,70	0,70	0,75
N11	LPHT060310ER-E05 H25	0,80	0,70	0,70	0,75
S1	LPHT060310TR-M06 MS2500	0,48	0,55	0,55	0,60
S2	LPHT060310TR-M06 MS2500	0,48	0,55	0,55	0,60
S3	LPHT060310TR-M06 MS2500	0,48	0,50	0,50	0,55
S11	LPHT060310TR-M06 MS2050	0,55	0,55	0,55	0,65
S12	LPHT060310TR-M06 MS2050	0,55	0,55	0,55	0,65
S13	LPHT060310TR-M06 MS2050	0,48	0,55	0,55	0,60
H5	LPHW060310TR-D06 MH1000	0,50	0,44	0,44	0,48
H8	LPHW060310TR-D06 MH1000	0,44	0,36	0,36	0,40
H11	LPHW060310TR-D06 MP3000	0,50	0,44	0,44	0,48
H12	LPHT060310TR-M06 T350M	0,50	0,44	0,44	0,48
H21	LPHW060310TR-D06 MH1000	0,44	0,36	0,36	0,40

SMG = Seco material group
f_z = mm/tooth
v_c= m/min
a_e/D_c = %
All cutting data are start values

R217/220.21-LP06 – Cutting data v_c = (m/min)

	MP2500			MP3000			T350M			F40M			MM4500			MS2050		
SMG	100%	70%	30%	100%	70%	30%	100%	70%	30%	100%	70%	30%	100%	70%	30%	100%	70%	30%
P1	300	345	420	285	325	395	260	300	365	225	260	315	200	230	275	—	—	—
P2	290	335	405	275	315	385	255	290	355	220	255	310	195	220	270	—	—	—
P3	255	295	350	240	280	330	225	255	305	195	220	265	170	195	235	—	—	—
P4	225	260	315	215	245	300	195	225	275	170	195	240	150	170	210	—	—	—
P5	215	245	300	205	235	285	185	215	260	165	185	230	145	165	200	—	—	—
P6	240	275	335	230	260	320	210	240	295	185	210	255	160	185	225	—	—	—
P7	230	260	320	215	250	300	200	230	275	175	200	240	150	175	210	—	—	—
P8	215	245	295	205	235	280	185	215	255	165	185	225	145	165	200	—	—	—
P11	220	255	310	210	240	295	195	220	270	170	190	235	150	170	205	—	—	—
M1	210	240	295	205	235	290	195	225	275	180	205	250	165	190	230	230	255	290
M2	175	200	240	170	195	240	160	185	225	145	170	205	140	160	190	190	210	230
M3	140	160	195	140	155	190	130	150	180	120	135	165	115	125	150	145	160	165
M4	110	125	150	105	120	145	100	115	140	90	105	125	85	100	115	105	120	120
M5	90	105	125	90	100	120	85	95	115	75	85	105	70	80	100	90	100	100
K1	230	265	325	220	250	305	—	—	—	175	200	245	—	—	—	—	—	—
K2	205	235	285	195	220	270	—	—	—	155	175	215	—	—	—	—	—	—
K3	175	200	240	165	190	230	—	—	—	130	150	185	—	—	—	—	—	—
K4	165	190	230	155	180	220	—	—	—	125	145	175	—	—	—	—	—	—
K5	100	115	140	95	110	135	—	—	—	75	85	105	—	—	—	—	—	—
K6	145	165	205	140	160	190	—	—	—	110	125	155	—	—	—	—	—	—
K7	130	150	180	120	140	170	—	—	—	95	110	135	—	—	—	—	—	—
N1	—	—	—	—	—	—	—	—	—	640	730	900	—	—	—	—	—	—
N2	—	—	—	—	—	—	—	—	—	520	590	730	—	—	—	—	—	—
N3	—	—	—	—	—	—	—	—	—	345	395	485	—	—	—	—	—	—
N11	—	—	—	—	—	—	—	—	—	395	450	560	—	—	—	—	—	—
S1	—	—	—	50	55	70	47	55	65	43	49	60	26	30	36	44	47	60
S2	—	—	—	40	46	55	38	43	50	35	39	47	21	24	29	35	38	48
S3	—	—	—	35	40	48	34	38	46	30	35	42	19	21	25	32	34	43
S11	—	—	—	70	80	95	65	75	90	60	70	80	37	42	50	60	65	80
S12	—	—	—	41	46	55	39	44	50	35	40	47	28	32	39	46	50	60
S13	—	—	—	32	37	44	30	35	42	28	31	38	23	26	31	38	40	50
H5	45	50	60	44	50	60	43	49	60	38	43	50	—	—	—	—	—	—
H8	48	55	65	47	55	65	46	50	65	40	46	55	—	—	—	—	—	—
H11	60	65	80	55	65	75	55	65	75	48	55	65	—	—	—	—	—	—
H12	85	100	120	85	95	115	85	95	115	75	85	100	—	—	—	—	—	—
H21	48	55	65	47	55	65	46	50	65	40	46	55	—	—	—	—	—	—

R217/220.21-LP06 – Cutting data v_c = (m/min)

	MS2500			MH1000			H25		
SMG	100%	70%	30%	100%	70%	30%	100%	70%	30%
P1	325	375	455	—	—	—	—	—	—
P2	315	365	445	—	—	—	—	—	—
P3	280	320	380	—	—	—	—	—	—
P4	245	280	345	—	—	—	—	—	—
P5	235	270	330	—	—	—	—	—	—
P6	265	300	370	—	—	—	—	—	—
P7	250	285	345	—	—	—	—	—	—
P8	235	270	320	—	—	—	—	—	—
P11	240	275	335	—	—	—	—	—	—
M1	225	260	320	—	—	—	—	—	—
M2	190	215	260	—	—	—	—	—	—
M3	155	175	210	—	—	—	—	—	—
M4	120	135	160	—	—	—	—	—	—
M5	100	110	135	—	—	—	—	—	—
K1	—	—	—	235	270	330	—	—	—
K2	—	—	—	205	240	290	—	—	—
K3	—	—	—	175	200	245	—	—	—
K4	—	—	—	165	190	235	—	—	—
K5	—	—	—	100	115	140	—	—	—
K6	—	—	—	145	170	205	—	—	—
K7	—	—	—	130	150	180	—	—	—
N1	—	—	—	—	—	—	660	760	930
N2	—	—	—	—	—	—	540	620	750
N3	—	—	—	—	—	—	360	410	500
N11	—	—	—	—	—	—	410	470	570
S1	55	65	80	—	—	—	—	—	—
S2	46	55	65	—	—	—	—	—	—
S3	41	46	55	—	—	—	—	—	—
S11	80	95	110	—	—	—	—	—	—
S12	47	55	65	—	—	—	—	—	—
S13	37	42	50	—	—	—	—	—	—
H5	—	—	—	50	60	70	—	—	—
H8	—	—	—	55	60	75	—	—	—
H11	—	—	—	65	75	90	—	—	—
H12	—	—	—	95	110	135	—	—	—
H21	—	—	—	55	60	75	—	—	—

R217.21

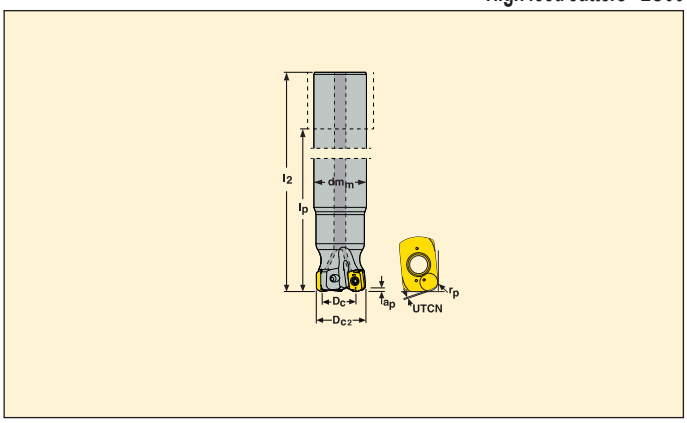

- For insert selection and cutting data recommendations, see page(s) 415-416
- For complete insert programme, see page(s) 608
- For helical interpolation, see page(s) 664-665 MN2015 Milling

Part No.	Type of mounting	Dimensions in mm								α° max		KG		Insert
		a_p	D_{c2}	D_c	dm_m	l_2	l_p	UTCN	r_p					
R217.21 -1820.0-LO06.2A	Cylindrical	0,9	20	13,3	18	160	110	0,38	1,8	1	2	0,3	35000	LO..06
R217.21 -2525.0-LO06.3A	Cylindrical	0,9	25	18,3	25	180	124	0,38	1,8	0,8	3	0,7	30000	LO..06
R217.21 -2527.0-LO06.3A	Cylindrical	0,9	27	20,3	25	200	140	0,38	1,8	0,7	3	0,7	29000	LO..06
R217.21 -3232.0-LO06.4A	Cylindrical	0,9	32	25,3	32	200	140	0,38	1,8	0,5	4	1,2	27000	LO..06

UTCN = Uncut thickness, deviation between programmed corner radii (r_p) and generated machined profile.
Ramping angle = α°

Spare Parts

For cutter	Insert screw	Insert key
		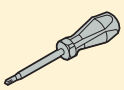
R217.21-..	C02508-T08P	T08P-3

Please check availability in current price and stock-list
Torque value 1,2 Nm, Torque keys, see page 690

R217/220.21-LO06

High feed cutters - LO06

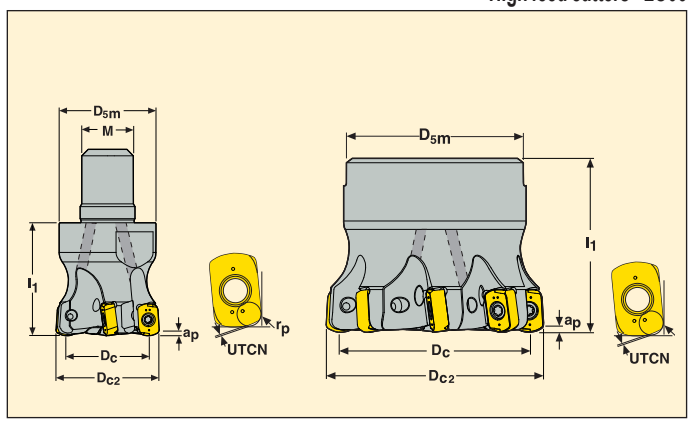

- For insert selection and cutting data recommendations, see page(s) 415-416
- For complete insert programme, see page(s) 608
- For helical interpolation, see page(s) 664-665 MN2015 Milling

Part No.	Type of mounting	Dimensions in mm a_p	D_{c2}	D_c	D_{5m}	dm_m	M	l_1	UTCN	r_p	α° max		KG		Insert
R217.21 -1020.RE-LO06.2A	Combimaster	0,9	20	13,3	18,5	–	M10	28	0,38	1,8	1	2	0,1	35000	LO..06
R217.21 -1225.RE-LO06.3A	Combimaster	0,9	25	18,3	23	–	M12	30	0,38	1,8	0,8	3	0,1	30000	LO..06
-1225.RE-LO06.4A	Combimaster	0,9	25	18,3	23	–	M12	30	0,38	1,8	0,8	4	0,1	30000	LO..06
R217.21 -1632.RE-LO06.4A	Combimaster	0,9	32	25,3	30	–	M16	35	0,38	1,8	0,5	4	0,2	27000	LO..06
-1632.RE-LO06.5A	Combimaster	0,9	32	25,3	30	–	M16	35	0,38	1,8	0,5	5	0,2	27000	LO..06
R217.21 -1635.RE-LO06.5A	Combimaster	0,9	35	28,3	30	–	M16	35	0,38	1,8	0,5	5	0,2	26000	LO..06
R220.21 -0035-LO06.6A	Arbor	0,9	35	28,3	32	16	–	35	0,38	1,8	0,5	6	0,2	24500	LO..06
R217.21 -1640.RE-LO06.5A	Combimaster	0,9	40	33,3	30	–	M16	35	0,38	1,8	0,4	5	0,2	18000	LO..06
-2040.RE-LO06.6A	Combimaster	0,9	40	33	36,5	–	M20	40	0,38	1,8	0,4	6	0,4	18000	LO..06
R220.21 -0040-LO06.7A	Arbor	0,9	40	33,3	35	16	–	40	0,38	1,8	0,4	7	0,2	18000	LO..06
-0042-LO06.7A	Arbor	0,9	42	35,3	35	16	–	40	0,38	1,8	0,4	7	0,2	18000	LO..06
R220.21 -0050-LO06.8A	Arbor	0,9	50	43,3	42	22	–	40	0,38	1,8	0,3	8	0,3	16000	LO..06
-0052-LO06.8A	Arbor	0,9	52	45,3	42	22	–	40	0,38	1,8	0,3	8	0,4	16000	LO..06
R220.21 -0063-LO06.9A	Arbor	0,9	63	56,3	47	22	–	40	0,38	1,8	0,25	9	0,5	15000	LO..06

UTCN = Uncut thickness, deviation between programmed corner radii (r_p) and generated machined profile.
Ramping angle = α°. Spigot size = dm_m

For Combimaster shanks and dimensions, see pages 572-581 MN2015 Milling

Spare Parts

For cutter	Insert screw	Insert key	Arbor screw
R217.21-..	C02508-T08P	T08P-3	–
R220.21- Dia 35	C02508-T08P	T08P-3	MC6S8X25
R220.21-Dia 40-42	C02508-T08P	T08P-3	220.17-689
R220.21- Dia 50-63	C02508-T08P	T08P-3	220.17-692

Please check availability in current price and stock-list
Torque value 1,2 Nm, Torque keys, see page 690

R217/220.21-LO06 – Insert selection

SMG		a_p	f_z		
			100%	70%	30%
P1	LOHT060310TR-ME06 T350M	0,90	0,50	0,50	0,55
P2	LOHT060310TR-ME06 T350M	0,90	0,50	0,50	0,55
P3	LOHT060310TR-ME06 T350M	0,90	0,48	0,48	0,55
P4	LOHT060310TR-M07 MP2500	0,90	0,55	0,55	0,60
P5	LOHT060310TR-M07 MP2500	0,90	0,55	0,55	0,60
P6	LOHT060310TR-M07 MP2500	0,90	0,55	0,55	0,60
P7	LOHT060310TR-M07 MP2500	0,90	0,55	0,55	0,60
P8	LOHT060310TR-MD07 MP2500	0,90	0,55	0,55	0,60
P11	LOHT060310TR-M07 MP2500	0,90	0,55	0,55	0,60
M1	LOHT060310TR-ME06 T350M	0,90	0,50	0,50	0,55
M2	LOHT060310TR-ME06 T350M	0,90	0,46	0,46	0,50
M3	LOHT060310TR-ME06 T350M	0,70	0,42	0,42	0,46
M4	LOHT060310TR-ME06 T350M	0,54	0,42	0,42	0,46
M5	LOHT060310TR-ME06 T350M	0,54	0,42	0,42	0,46
K1	LOHT060310TR-MD07 MK2050	0,90	0,60	0,60	0,65
K2	LOHT060310TR-MD07 MK2050	0,90	0,55	0,55	0,60
K3	LOHT060310TR-MD07 MK2050	0,90	0,55	0,55	0,60
K4	LOHW060310TR-D07 MP1500	0,90	0,55	0,55	0,60
K5	LOHW060310TR-D07 MP1500	0,90	0,48	0,48	0,55
K6	LOHT060310TR-MD07 MK2050	0,90	0,55	0,55	0,60
K7	LOHT060310TR-MD07 MK2050	0,90	0,48	0,48	0,55
S1	LOHT060310TR-ME06 MS2500	0,54	0,42	0,42	0,46
S2	LOHT060310TR-ME06 MS2500	0,54	0,42	0,42	0,46
S3	LOHT060310TR-M07 F40M	0,54	0,46	0,46	0,50
S11	LOHT060310TR-ME06 MS2050	0,63	0,44	0,44	0,48
S12	LOHT060310TR-ME06 MS2050	0,63	0,44	0,44	0,48
S13	LOHT060310TR-ME06 MS2050	0,54	0,42	0,42	0,46
H5	LOHW060310TR-D07 MH1000	0,55	0,40	0,40	0,44
H8	LOHW060310TR-D07 MH1000	0,48	0,34	0,34	0,36
H11	LOHT060310TR-M07 T350M	0,55	0,40	0,40	0,44
H12	LOHT060310TR-M07 T350M	0,55	0,40	0,40	0,44
H21	LOHW060310TR-D07 MH1000	0,48	0,34	0,34	0,36

SMG = Seco material group
f_z = mm/tooth
v_c= m/min
a_e/D_c = %
All cutting data are start values

R217/220.21-LO06 – Cutting data v_c = (m/min)

	MP1500			MP2500			MP3000			T350M			F40M			MM4500		
SMG	100%	70%	30%	100%	70%	30%	100%	70%	30%	100%	70%	30%	100%	70%	30%	100%	70%	30%
P1	280	315	385	270	305	375	260	290	355	260	295	360	205	235	285	185	210	255
P2	270	305	375	265	300	365	250	285	345	255	290	350	200	225	275	180	205	245
P3	240	270	330	235	265	320	220	250	305	220	250	300	175	200	245	155	175	210
P4	210	240	290	205	230	285	195	220	270	195	220	270	155	175	215	140	155	190
P5	200	225	275	195	220	270	185	210	255	190	215	260	150	170	205	135	150	185
P6	225	255	310	220	250	305	210	235	285	210	240	290	165	190	230	150	170	205
P7	215	240	295	210	235	285	195	220	270	200	225	275	160	180	215	140	160	195
P8	200	225	275	195	220	270	185	210	255	185	210	255	150	170	205	130	150	180
P11	205	235	285	200	230	280	190	215	265	195	220	265	155	175	210	135	155	190
M1	—	—	—	190	215	265	190	210	260	195	220	270	160	180	225	155	175	210
M2	—	—	—	160	180	220	155	175	215	165	185	225	135	150	185	130	145	175
M3	—	—	—	130	145	175	125	140	170	130	150	180	110	125	150	105	115	140
M4	—	—	—	100	115	135	100	110	135	105	115	140	85	95	115	80	90	110
M5	—	—	—	85	95	115	85	95	110	85	95	115	70	80	95	65	75	90
K1	215	245	295	210	235	290	200	225	275	—	—	—	160	180	220	—	—	—
K2	190	215	265	185	210	255	175	200	245	—	—	—	140	160	195	—	—	—
K3	160	185	225	160	180	215	150	170	205	—	—	—	120	135	165	—	—	—
K4	155	175	210	150	170	205	145	160	195	—	—	—	115	130	155	—	—	—
K5	95	110	130	95	105	125	90	100	120	—	—	—	70	80	95	—	—	—
K6	135	155	185	135	150	185	125	140	175	—	—	—	100	115	140	—	—	—
K7	120	140	165	120	135	160	115	130	155	—	—	—	90	100	125	—	—	—
S1	—	—	—	—	—	—	47	50	65	48	55	65	40	45	55	25	28	33
S2	—	—	—	—	—	—	37	42	50	39	43	50	32	36	44	20	22	27
S3	—	—	—	—	—	—	33	37	44	34	38	46	28	32	38	17	20	23
S11	—	—	—	—	—	—	65	75	90	70	75	90	55	65	75	35	39	46
S12	—	—	—	—	—	—	38	42	50	39	44	50	33	36	44	27	30	36
S13	—	—	—	—	—	—	30	34	41	31	35	42	26	29	35	21	24	29
H5	47	55	65	42	47	55	41	46	55	44	49	60	35	39	47	—	—	—
H8	50	55	70	44	50	60	43	49	60	47	50	60	37	42	50	—	—	—
H11	60	70	80	55	60	70	50	60	70	55	65	75	45	50	60	—	—	—
H12	90	100	125	80	90	110	80	90	105	85	95	115	65	75	90	—	—	—
H21	50	55	70	44	50	60	43	49	60	47	50	60	37	42	50	—	—	—

R217/220.21-LO06 – Cutting data v_c = (m/min)

	MK2050			MS2050			MS2500			MH1000		
SMG	100%	70%	30%	100%	70%	30%	100%	70%	30%	100%	70%	30%
P1	245	275	335	275	300	340	295	335	410	—	—	—
P2	235	265	325	265	290	330	290	325	400	—	—	—
P3	210	235	290	230	255	285	255	290	350	—	—	—
P4	185	210	255	205	225	250	225	255	310	—	—	—
P5	175	200	240	195	215	235	215	240	295	—	—	—
P6	195	225	270	220	240	265	240	270	330	—	—	—
P7	185	210	255	205	225	250	225	255	315	—	—	—
P8	175	200	240	195	215	240	215	240	295	—	—	—
P11	180	205	250	200	220	245	220	250	305	—	—	—
M1	—	—	—	230	255	290	205	235	285	—	—	—
M2	—	—	—	190	210	230	170	195	235	—	—	—
M3	—	—	—	145	160	170	140	155	190	—	—	—
M4	—	—	—	105	115	120	110	125	150	—	—	—
M5	—	—	—	90	100	100	90	100	125	—	—	—
K1	255	290	355	—	—	—	—	—	—	200	225	275
K2	225	255	315	—	—	—	—	—	—	175	200	240
K3	190	215	265	—	—	—	—	—	—	150	170	205
K4	185	205	250	—	—	—	—	—	—	140	160	195
K5	115	130	155	—	—	—	—	—	—	90	100	120
K6	160	180	220	—	—	—	—	—	—	125	140	170
K7	145	165	195	—	—	—	—	—	—	110	125	150
N1	—	—	—	—	—	—	—	—	—	—	—	—
N2	—	—	—	—	—	—	—	—	—	—	—	—
N3	—	—	—	—	—	—	—	—	—	—	—	—
N11	—	—	—	—	—	—	—	—	—	—	—	—
S1	—	—	—	45	48	60	55	60	75	—	—	—
S2	—	—	—	36	38	48	43	48	60	—	—	—
S3	—	—	—	33	35	43	38	42	50	—	—	—
S11	—	—	—	60	65	80	75	85	100	—	—	—
S12	—	—	—	47	50	60	44	49	60	—	—	—
S13	—	—	—	39	41	50	35	39	47	—	—	—
H5	—	—	—	—	—	—	—	—	—	44	49	60
H8	—	—	—	—	—	—	—	—	—	46	50	65
H11	—	—	—	—	—	—	—	—	—	55	60	75
H12	—	—	—	—	—	—	—	—	—	85	95	115
H21	—	—	—	—	—	—	—	—	—	46	50	65

R217.21

High feed cutters

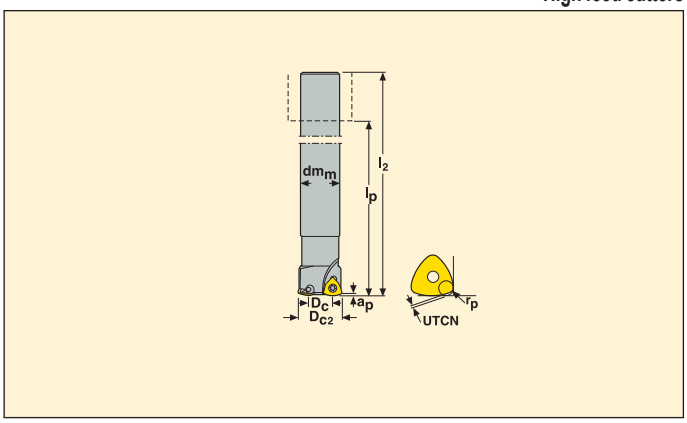

- For insert selection and cutting data recommendations, see page(s) 420-427
- For complete insert programme, see page(s) 645

Part No.	Type of mounting	Dimensions in mm a_p	D_{c2}	D_c	dm_m	l_2	l_p	UTCN	r_p	α° max		KG		Insert
R217.21 -1416.0-R080.2A	Cylindrical	0,63	16	9,25	14	150	105	0,39	1	6,1	2	0,2	53400	218.19-080
R217.21 -1820.0-R100.2A	Cylindrical	0,74	20	11,4	18	160	110	0,45	1,47	5,7	2	0,3	32600	218.19-100
-2025.0-R100.2A	Cylindrical	0,74	25	16,46	20	170	120	0,45	1,47	3,48	2	0,4	29100	218.19-100
-2525.0-R100.3A	Cylindrical	0,74	25	16,46	25	170	114	0,45	1,47	3,48	3	0,6	29100	218.19-100
R217.21 -2532.0-R125.2A	Cylindrical	1,0	32	21,16	25	195	140	0,61	1,74	3,67	2	0,8	19700	218.19-125
-3232.0-R125.3A	Cylindrical	1,0	32	21,16	32	195	135	0,61	1,74	3,67	3	1,1	19700	218.19-125

UTCN = Uncut thickness, deviation between programmed corner radii (r_p) and generated machined profile.
Ramping angle = α°

Spare Parts

For cutter	Insert screw	Insert key
		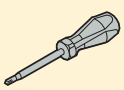
R217.21-R080	C02205-T07P	T07P-3
R217.21-R100	C02506-T08P	T08P-3
R217.21-R125	C03007-T09P	T09P-3

Please check availability in current price and stock-list
Torque value, for insert 218.19-080 0,9 Nm, 218.19-100 1,0 Nm, 218.19-125 2,0 Nm, 218.19-160 3,0 Nm. Torque keys, see page 690

R217.21

High feed cutters

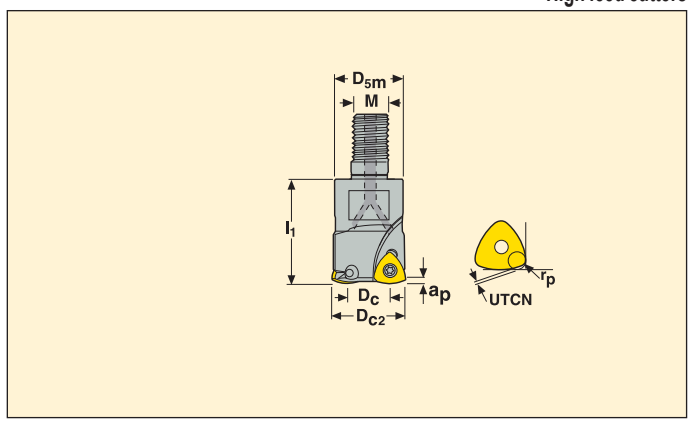

- For insert selection and cutting data recommendations, see page(s) 420-427
- For complete insert programme, see page(s) 645

Part No.	Type of mounting	Dimensions in mm a_p	D_{c2}	D_c	D_{5m}	dm_m	M	l_1	UTCN	r_p	α° max		KG		Insert
R217.21 -0816.RE-R080.2	Combimaster	0,6	16	9,25	13,5	–	M8	23	0,39	1	6,1	2	0,1	53400	218.19-080
R217.21 -1020.RE-R100.2A	Combimaster	0,7	20	11,45	18,5	–	M10	28	0,45	1,47	5,71	2	0,1	32600	218.19-100
-1020.RE-R100.2HA	Combimaster	1,0	20	10,44	18,5	–	M10	28	0,55	1,7	4,32	2	0,1	32600	218.19-100
R217.21 -1225.RE-R100.3A	Combimaster	0,7	25	16,46	23	–	M12	35	0,45	1,47	3,48	3	0,1	29100	218.19-100
-1225.RE-R125.2HA	Combimaster	1,5	25	12,36	23	–	M12	35	0,8	2,18	4,25	2	0,1	29100	218.19-125
R217.21 -1632.RE-R125.2A	Combimaster	1,0	32	21,16	30	–	M16	40	0,61	1,74	3,67	2	0,2	19700	218.19-125
-1632.RE-R125.3A	Combimaster	1,0	32	21,21	30	–	M16	40	0,61	1,74	3,7	3	0,3	19700	218.19-125
-1632.RE-R160.2HA	Combimaster	1,8	32	16,09	30	–	M16	40	0,97	2,87	3,76	2	0,2	16200	218.19-160
R217.21 -1635.RE-R125.3A	Combimaster	1,0	35	24,16	30	–	M16	40	0,61	1,74	3,1	3	0,2	18800	218.19-125
R217.21 -1640.RE-R125.4A	Combimaster	1,0	40	29,25	30	–	M16	40	0,61	1,74	2,47	4	0,3	17600	218.19-125
-1640.RE-R160.3HA	Combimaster	1,8	40	23,99	30	–	M16	40	0,97	2,87	2,18	3	0,2	14500	218.19-160
-2040.RE-R125.4A	Combimaster	1	40	29,25	36,5	–	M20	40	0,61	1,74	2,47	4	0,3	17600	218.19-125
-2040.RE-R160.3HA	Combimaster	1,8	40	23,99	36,5	–	M20	40	0,97	2,87	2,18	3	0,3	14500	218.19-160

UTCN = Uncut thickness, deviation between programmed corner radii (r_p) and generated machined profile.
Ramping angle = α°. Spigot size = dm_m

For Combimaster shanks and dimensions, see pages 572-581 MN2015 Milling

Spare Parts

For cutter	Insert screw	Insert key
R217.21-R080	C02205-T07P	T07P-3
R217.21-R100	C02506-T08P	T08P-3
R217.21-R125	C03007-T09P	T09P-3
R217.21-R160	C03510-T15P	T15P-3

Please check availability in current price and stock-list

Torque value, for insert 218.19-080 0,9 Nm, 218.19-100 1,0 Nm, 218.19-125 2,0 Nm, 218.19-160 3,0 Nm. Torque keys, see page 690

R220.21

High feed cutters

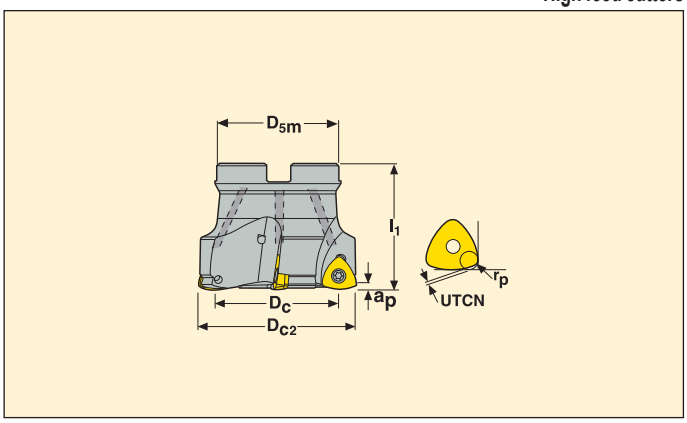

- For insert selection and cutting data recommendations, see page(s) 420-427
- For complete insert programme, see page(s) 645

Part No.	Type of mounting	Dimensions in mm								α° max		KG		Insert
		a_p	D_{c2}	D_c	D_{5m}	dm_m	l_1	UTCN	r_p					
R220.21 -0040-R125.4A	Arbor	1,0	40	29,2	35	16	40	0,61	1,75	2,47	4	0,2	17600	218.19-125
R220.21 -0042-R125.4A	Arbor	1,0	42	31,2	35	16	40	0,61	1,75	2,28	4	0,2	17200	218.19-125
R220.21 -0050-R160.3A	Arbor	1,8	50	34,17	47	22	40	0,97	2,85	1,47	3	0,3	12900	218.19-160
-0050-R160.4A	Arbor	1,8	50	34,17	47	22	40	0,97	2,85	1,47	4	0,3	12900	218.19-160
R220.21 -0052-R160.4A	Arbor	1,8	52	36,19	47	22	40	0,97	2,85	1,38	4	0,4	12700	218.19-160
R220.21 -0063-R160.4A	Arbor	1,8	63	47,2	50	27	50	0,97	2,85	1	4	0,5	11500	218.19-160
-0063-R160.5A	Arbor	1,8	63	47,2	50	27	50	0,97	2,85	1	5	0,6	11500	218.19-160
R220.21 -0066-R160.5A	Arbor	1,8	66	50,21	50	27	50	0,97	2,85	0,95	5	0,6	11200	218.19-160
R220.21 -0080-R160.6A	Arbor	1,8	80	64,15	62	27	50	0,97	2,85	0,73	6	1,0	10200	218.19-160
R220.21 -0100-R160.7A	Arbor	1,8	100	84,13	77	32	50	0,97	2,85	0,54	7	1,6	9700	218.19-160

UTCN = Uncut thickness, deviation between programmed corner radii (r_p) and generated machined profile.
Ramping angle = α°

Spare Parts

For cutter	Insert screw	Insert key	Arbor screw
		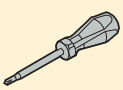	
R220.21-0040-0042	C03007-T09P	T09P-3	220.17-689
R220.21-0050-0052	C03510-T15P	T15P-3	220.17-692
R220.21-0063	C03510-T15P	T15P-3	MC6S12X35
R220.21-0066-0080	C03510-T15P	T15P-4	MC6S12X35
R220.21-0100	C03510-T15P	T15P-4	220.17-694

Please check availability in current price and stock-list
Torque value Dia 40-42 2,0 Nm, Dia 50-100 3,0 Nm. Torque keys, see page 690

R217.21-080 – Insert selection

SMG		a_p	f_z		
			100%	70%	30%
P1	218.19-080T-M04 T350M	0,60	0,50	0,50	0,55
P2	218.19-080T-M04 T350M	0,60	0,50	0,50	0,55
P3	218.19-080T-M04 T350M	0,60	0,48	0,48	0,50
P4	218.19-080T-MD04 MS2500	0,60	0,46	0,46	0,50
P5	218.19-080T-MD04 MS2500	0,60	0,46	0,46	0,50
P6	218.19-080T-MD04 MS2500	0,60	0,44	0,44	0,50
P7	218.19-080T-MD04 MS2500	0,60	0,44	0,44	0,50
P8	218.19-080T-MD04 MP2500	0,60	0,48	0,48	0,50
P11	218.19-080T-MD04 MS2500	0,60	0,44	0,44	0,50
M1	218.19-080T-M04 F40M	0,60	0,50	0,50	0,55
M2	218.19-080T-M04 F40M	0,60	0,46	0,46	0,50
M3	218.19-080T-M04 F40M	0,48	0,40	0,40	0,44
M4	218.19-080T-M04 F40M	0,36	0,42	0,42	0,46
M5	218.19-080T-M04 F40M	0,36	0,42	0,42	0,46
K1	218.19-080T-MD04 F25M	0,60	0,50	0,50	0,55
K2	218.19-080T-MD04 F25M	0,60	0,46	0,46	0,50
K3	218.19-080T-MD04 F25M	0,60	0,46	0,46	0,50
K4	218.19-080T-MD04 F25M	0,60	0,46	0,46	0,50
K5	218.19-080T-MD04 F25M	0,60	0,40	0,40	0,46
K6	218.19-080T-MD04 F25M	0,60	0,46	0,46	0,50
K7	218.19-080T-MD04 F25M	0,60	0,40	0,40	0,46
S1	218.19-080T-M04 F40M	0,36	0,42	0,42	0,46
S2	218.19-080T-M04 F40M	0,36	0,42	0,42	0,46
S3	218.19-080T-M04 F40M	0,36	0,38	0,38	0,42
S11	218.19-080T-M04 F40M	0,42	0,44	0,44	0,48
S12	218.19-080T-M04 F40M	0,42	0,44	0,44	0,48
S13	218.19-080T-M04 F40M	0,36	0,42	0,42	0,46
H5	218.19-080T-MD04 F15M	0,38	0,34	0,34	0,38
H8	218.19-080T-MD04 F15M	0,32	0,28	0,28	0,30
H11	218.19-080T-MD04 F15M	0,38	0,34	0,34	0,38
H12	218.19-080T-MD04 F25M	—	—	—	—
H21	218.19-080T-MD04 F15M	0,32	0,28	0,28	0,30

SMG = Seco material group
f_z = mm/tooth
v_c= m/min
a_e/D_c = %
All cutting data are start values

R217.21-080 – Cutting data v_c = (m/min)

	MP2500			T350M			F15M			F25M			F30M			F40M		
SMG	100%	70%	30%	100%	70%	30%	100%	70%	30%	100%	70%	30%	100%	70%	30%	100%	70%	30%
P1	355	425	510	310	370	445	—	—	—	285	335	405	285	335	405	270	320	385
P2	350	415	490	305	360	425	—	—	—	275	325	390	275	330	390	265	315	370
P3	305	360	430	265	315	375	—	—	—	240	285	340	240	285	340	230	275	325
P4	270	320	375	235	275	330	—	—	—	210	250	300	215	255	300	205	240	285
P5	255	305	365	225	265	320	—	—	—	205	240	290	205	240	290	195	230	275
P6	285	340	410	250	295	355	—	—	—	230	270	325	230	270	325	220	260	310
P7	270	320	385	235	280	335	—	—	—	215	255	305	215	255	310	205	245	295
P8	255	305	360	225	265	315	—	—	—	205	240	285	205	240	285	195	230	275
P11	265	310	375	230	270	330	—	—	—	210	250	300	210	250	300	200	235	285
M1	250	295	355	235	275	330	—	—	—	—	—	—	225	265	315	210	250	300
M2	205	245	295	190	230	275	—	—	—	—	—	—	185	215	260	175	205	250
M3	165	200	240	155	185	225	—	—	—	—	—	—	150	180	215	140	170	205
M4	125	150	180	120	140	170	—	—	—	—	—	—	115	135	160	110	130	155
M5	105	125	150	100	120	140	—	—	—	—	—	—	95	110	135	90	105	130
K1	275	325	390	—	—	—	240	285	335	220	260	310	220	260	310	210	250	295
K2	245	290	345	—	—	—	210	250	300	195	230	275	195	230	275	185	220	265
K3	205	245	295	—	—	—	180	210	255	165	195	235	165	195	235	155	185	220
K4	195	235	280	—	—	—	170	200	240	155	185	220	155	185	225	150	175	210
K5	120	140	170	—	—	—	105	120	145	95	110	135	95	110	135	90	105	130
K6	175	205	245	—	—	—	150	175	215	135	165	195	140	165	195	130	155	185
K7	150	180	215	—	—	—	130	155	185	120	145	170	120	145	170	115	135	165
N1	—	—	—	—	—	—	—	—	—	—	—	—	—	—	—	780	920	1100
N2	—	—	—	—	—	—	—	—	—	—	—	—	—	—	—	630	750	890
N3	—	—	—	—	—	—	—	—	—	—	—	—	—	—	—	420	495	600
N11	—	—	—	—	—	—	—	—	—	—	—	—	—	—	—	480	570	680
S1	—	—	—	55	65	80	—	—	—	—	—	—	55	65	75	50	60	70
S2	—	—	—	45	55	65	—	—	—	—	—	—	42	50	60	40	48	60
S3	—	—	—	39	47	55	—	—	—	—	—	—	37	45	55	36	43	50
S11	—	—	—	80	95	110	—	—	—	—	—	—	75	90	105	70	85	100
S12	—	—	—	45	55	65	—	—	—	—	—	—	43	50	60	41	49	60
S13	—	—	—	36	43	50	—	—	—	—	—	—	34	41	49	32	39	46
H5	55	65	75	50	60	70	50	60	70	—	—	—	46	55	65	44	50	60
H8	55	65	80	55	65	75	55	65	75	—	—	—	48	60	70	46	55	65
H11	65	80	95	65	75	90	65	75	90	—	—	—	60	70	85	55	65	80
H12	100	120	145	95	115	135	95	115	135	—	—	—	90	105	125	85	100	120
H21	55	65	80	55	65	75	55	65	75	—	—	—	48	60	70	46	55	65

R217.21-080 – Cutting data v_c = (m/min)

	MS2500		
SMG	100%	70%	30%
P1	370	440	530
P2	360	430	510
P3	315	375	445
P4	280	330	390
P5	265	315	380
P6	300	355	425
P7	280	335	400
P8	265	315	375
P11	275	325	390
M1	260	305	365
M2	210	250	305
M3	170	205	245
M4	130	155	185
M5	110	130	155
K1	—	—	—
K2	—	—	—
K3	—	—	—
K4	—	—	—
K5	—	—	—
K6	—	—	—
K7	—	—	—
N1	—	—	—
N2	—	—	—
N3	—	—	—
N11	—	—	—
S1	65	75	90
S2	50	60	75
S3	45	55	65
S11	90	110	130
S12	50	60	75
S13	41	49	60
H5	—	—	—
H8	—	—	—
H11	—	—	—
H12	—	—	—
H21	—	—	—

R217.21-100 – Insert selection

SMG		a_p	f_z		
			100%	70%	30%
P1	218.19-100T-M06 T350M	0,70	0,75	0,75	0,85
P2	218.19-100T-M06 T350M	0,70	0,80	0,80	0,85
P3	218.19-100T-M06 T350M	0,70	0,75	0,75	0,80
P4	218.19-100T-MD08 MS2500	0,70	0,95	0,95	1,1
P5	218.19-100T-MD08 MS2500	0,70	0,95	0,95	1,1
P6	218.19-100T-MD08 MS2500	0,70	0,95	0,95	1,0
P7	218.19-100T-MD08 MS2500	0,70	0,95	0,95	1,0
P8	218.19-100T-MD08 MP2500	0,70	1,0	1,0	1,1
P11	218.19-100T-MD08 MS2500	0,70	0,95	0,95	1,0
M1	218.19-100T-M06 F40M	0,70	0,80	0,80	0,85
M2	218.19-100T-M06 F40M	0,70	0,70	0,70	0,80
M3	218.19-100T-M06 F40M	0,55	0,65	0,65	0,70
M4	218.19-100T-M06 F40M	0,42	0,65	0,65	0,70
M5	218.19-100T-M06 F40M	0,42	0,65	0,65	0,70
K1	218.19-100T-MD08 MK2050	0,70	1,0	1,0	1,2
K2	218.19-100T-MD08 MK2050	0,70	0,95	0,95	1,1
K3	218.19-100T-MD08 MK2050	0,70	0,95	0,95	1,1
K4	218.19-100T-MD08 MK2050	0,70	0,95	0,95	1,1
K5	218.19-100T-MD08 MK2050	0,70	0,85	0,85	0,95
K6	218.19-100T-MD08 MK2050	0,70	0,95	0,95	1,1
K7	218.19-100T-MD08 MK2050	0,70	0,85	0,85	0,95
N1	218.19-100-E06 H25	0,70	1,0	1,0	1,1
N2	218.19-100-E06 H25	0,70	1,0	1,0	1,1
N3	218.19-100-E06 H25	0,70	1,0	1,0	1,1
N11	218.19-100-E06 H25	0,70	1,0	1,0	1,1
S1	218.19-100T-M06 MS2500	0,42	0,65	0,65	0,70
S2	218.19-100T-M06 MS2500	0,42	0,65	0,65	0,70
S3	218.19-100T-M06 MS2500	0,42	0,60	0,60	0,65
S11	218.19-100T-M06 MS2050	0,48	0,70	0,70	0,75
S12	218.19-100T-M06 MS2050	0,48	0,70	0,70	0,75
S13	218.19-100T-M06 MS2050	0,42	0,65	0,65	0,70
H5	218.19-100T-MD08 MH1000	0,44	0,70	0,70	0,80
H8	218.19-100T-MD08 MH1000	0,38	0,60	0,60	0,65
H11	218.19-100T-MD08 MH1000	0,44	0,70	0,70	0,80
H12	218.19-100T-M06 MP3000	0,44	0,55	0,55	0,60
H21	218.19-100T-MD08 MH1000	0,38	0,60	0,60	0,65

SMG = Seco material group
f_z = mm/tooth
v_c= m/min
a_e/D_c = %
All cutting data are start values

R217.21-100 – Cutting data v_c = (m/min)

	MP1500			MP2500			MP3000			T350M			F15M			F25M		
SMG	100%	70%	30%	100%	70%	30%	100%	70%	30%	100%	70%	30%	100%	70%	30%	100%	70%	30%
P1	315	365	440	280	325	390	295	345	415	275	315	380	—	—	—	260	300	365
P2	300	350	425	270	310	380	290	335	405	265	310	370	—	—	—	255	295	355
P3	265	305	375	235	270	330	255	295	350	235	270	320	—	—	—	225	260	305
P4	235	270	330	205	240	290	225	260	315	205	240	290	—	—	—	195	230	275
P5	225	265	315	200	235	280	215	250	300	195	230	275	—	—	—	190	220	265
P6	255	295	350	225	260	310	240	280	335	220	255	310	—	—	—	210	245	295
P7	240	280	330	215	245	295	225	265	315	210	240	290	—	—	—	200	230	280
P8	225	260	315	195	230	280	215	250	295	195	230	270	—	—	—	190	220	260
P11	235	270	325	205	240	285	220	255	310	205	235	285	—	—	—	195	225	270
M1	—	—	—	195	225	270	215	250	305	205	235	285	—	—	—	—	—	—
M2	—	—	—	160	185	225	180	205	250	170	195	235	—	—	—	—	—	—
M3	—	—	—	130	150	180	145	170	205	135	160	195	—	—	—	—	—	—
M4	—	—	—	100	115	140	110	130	155	105	120	150	—	—	—	—	—	—
M5	—	—	—	85	95	115	90	110	130	90	100	125	—	—	—	—	—	—
K1	240	275	340	210	245	300	230	265	320	—	—	—	195	225	270	—	—	—
K2	215	250	300	190	220	265	205	235	285	—	—	—	175	200	240	—	—	—
K3	180	210	250	160	185	225	170	200	240	—	—	—	145	170	205	—	—	—
K4	175	200	240	155	180	215	165	190	230	—	—	—	140	160	195	—	—	—
K5	105	120	150	95	110	130	100	115	140	—	—	—	85	100	120	—	—	—
K6	155	180	210	135	155	190	145	165	200	—	—	—	125	145	170	—	—	—
K7	135	155	190	120	140	170	130	150	180	—	—	—	110	125	155	—	—	—
N1	—	—	—	—	—	—	—	—	—	—	—	—	—	—	—	—	—	—
N2	—	—	—	—	—	—	—	—	—	—	—	—	—	—	—	—	—	—
N3	—	—	—	—	—	—	—	—	—	—	—	—	—	—	—	—	—	—
N11	—	—	—	—	—	—	—	—	—	—	—	—	—	—	—	—	—	—
S1	—	—	—	—	—	—	50	60	75	49	55	70	—	—	—	—	—	—
S2	—	—	—	—	—	—	42	49	60	40	46	55	—	—	—	—	—	—
S3	—	—	—	—	—	—	37	43	50	35	40	49	—	—	—	—	—	—
S11	—	—	—	—	—	—	70	85	100	70	80	95	—	—	—	—	—	—
S12	—	—	—	—	—	—	42	49	60	39	46	55	—	—	—	—	—	—
S13	—	—	—	—	—	—	33	39	47	32	37	45	—	—	—	—	—	—
H5	50	60	75	—	—	—	45	55	65	45	50	60	42	49	60	43	50	60
H8	55	65	75	—	—	—	48	55	65	48	55	65	44	50	60	46	55	65
H11	65	75	95	—	—	—	60	65	80	55	65	80	55	60	75	55	65	75
H12	100	115	140	—	—	—	85	100	120	85	100	120	80	95	115	80	95	115
H21	55	65	75	—	—	—	48	55	65	48	55	65	44	50	60	46	55	65

R217.21-100 – Cutting data v_c = (m/min)

	F40M			MK2050			MS2050			MS2500			MH1000			H25		
SMG	100%	70%	30%	100%	70%	30%	100%	70%	30%	100%	70%	30%	100%	70%	30%	100%	70%	30%
P1	235	275	330	275	320	380	—	—	—	340	395	480	—	—	—	—	—	—
P2	230	270	325	265	305	370	—	—	—	335	385	465	—	—	—	—	—	—
P3	205	235	280	230	270	325	—	—	—	295	340	400	—	—	—	—	—	—
P4	180	210	250	205	235	285	—	—	—	260	300	360	—	—	—	—	—	—
P5	170	200	240	200	230	275	—	—	—	245	285	345	—	—	—	—	—	—
P6	190	225	270	220	255	305	—	—	—	275	320	385	—	—	—	—	—	—
P7	180	210	255	210	245	290	—	—	—	260	305	365	—	—	—	—	—	—
P8	170	200	235	195	225	275	—	—	—	245	285	335	—	—	—	—	—	—
P11	175	205	245	205	235	280	—	—	—	255	295	355	—	—	—	—	—	—
M1	185	215	260	—	—	—	240	270	295	240	275	335	—	—	—	—	—	—
M2	155	180	215	—	—	—	195	220	240	195	230	275	—	—	—	—	—	—
M3	125	145	175	—	—	—	150	170	175	160	185	225	—	—	—	—	—	—
M4	95	110	135	—	—	—	110	125	120	120	140	170	—	—	—	—	—	—
M5	80	95	110	—	—	—	90	105	100	100	120	145	—	—	—	—	—	—
K1	185	210	255	285	330	400	—	—	—	—	—	—	235	270	330	—	—	—
K2	160	190	225	255	295	355	—	—	—	—	—	—	210	245	290	—	—	—
K3	135	160	190	215	250	300	—	—	—	—	—	—	175	205	245	—	—	—
K4	130	150	185	205	240	285	—	—	—	—	—	—	170	195	235	—	—	—
K5	80	95	110	125	145	175	—	—	—	—	—	—	105	120	145	—	—	—
K6	115	135	160	180	210	250	—	—	—	—	—	—	150	175	205	—	—	—
K7	105	120	145	160	185	225	—	—	—	—	—	—	130	155	185	—	—	—
N1	680	790	940	—	—	—	—	—	—	—	—	—	—	—	—	710	820	980
N2	550	640	760	—	—	—	—	—	—	—	—	—	—	—	—	570	660	790
N3	365	425	510	—	—	—	—	—	—	—	—	—	—	—	—	380	440	530
N11	420	485	580	—	—	—	—	—	—	—	—	—	—	—	—	435	500	600
S1	45	50	65	—	—	—	46	50	65	60	70	85	—	—	—	—	—	—
S2	36	42	50	—	—	—	37	41	50	48	55	70	—	—	—	—	—	—
S3	32	37	44	—	—	—	33	37	46	42	49	60	—	—	—	—	—	—
S11	60	75	90	—	—	—	60	65	85	85	95	120	—	—	—	—	—	—
S12	36	42	50	—	—	—	46	50	65	48	55	70	—	—	—	—	—	—
S13	29	34	40	—	—	—	39	44	55	39	45	55	—	—	—	—	—	—
H5	39	45	55	—	—	—	—	—	—	—	—	—	50	60	70	—	—	—
H8	41	48	55	—	—	—	—	—	—	—	—	—	55	60	75	—	—	—
H11	49	60	70	—	—	—	—	—	—	—	—	—	65	75	90	—	—	—
H12	75	85	105	—	—	—	—	—	—	—	—	—	95	115	135	—	—	—
H21	41	48	55	—	—	—	—	—	—	—	—	—	55	60	75	—	—	—

R217/220.21-125 – Insert selection

SMG		a_p	f_z		
			100%	70%	30%
P1	218.19-125T-T3-M07 T350M	1,0	0,85	0,85	0,90
P2	218.19-125T-T3-M07 T350M	1,0	0,85	0,85	0,95
P3	218.19-125T-T3-M07 T350M	1,0	0,80	0,80	0,90
P4	218.19-125T-T3-MD10 MS2500	1,0	1,1	1,1	1,2
P5	218.19-125T-T3-MD10 MS2500	1,0	1,1	1,1	1,2
P6	218.19-125T-T3-MD10 MS2500	1,0	1,1	1,1	1,2
P7	218.19-125T-T3-MD10 MS2500	1,0	1,1	1,1	1,2
P8	218.19-125T-T3-MD10 MP2500	1,0	1,1	1,1	1,3
P11	218.19-125T-T3-MD10 MS2500	1,0	1,1	1,1	1,2
M1	218.19-125T-T3-M07 F40M	1,0	0,85	0,85	0,95
M2	218.19-125T-T3-M07 F40M	1,0	0,75	0,75	0,85
M3	218.19-125T-T3-M07 F40M	0,80	0,70	0,70	0,75
M4	218.19-125T-T3-M07 F40M	0,60	0,70	0,70	0,75
M5	218.19-125T-T3-M07 F40M	0,60	0,70	0,70	0,75
K1	218.19-125T-T3-MD10 MK2050	1,0	1,2	1,2	1,3
K2	218.19-125T-T3-MD10 MK2050	1,0	1,1	1,1	1,2
K3	218.19-125T-T3-MD10 MK2050	1,0	1,1	1,1	1,2
K4	218.19-125T-T3-MD10 MK2050	1,0	1,1	1,1	1,2
K5	218.19-125T-T3-MD10 MK2050	1,0	1,0	1,0	1,1
K6	218.19-125T-T3-MD10 MK2050	1,0	1,1	1,1	1,2
K7	218.19-125T-T3-MD10 MK2050	1,0	1,0	1,0	1,1
N1	218.19-125-T3-E06 H25	1,0	0,95	0,95	1,0
N2	218.19-125-T3-E06 H25	1,0	0,95	0,95	1,0
N3	218.19-125-T3-E06 H25	1,0	0,95	0,95	1,0
N11	218.19-125-T3-E06 H25	1,0	0,95	0,95	1,0
S1	218.19-125T-T3-M07 MS2500	0,60	0,70	0,70	0,75
S2	218.19-125T-T3-M07 MS2500	0,60	0,70	0,70	0,75
S3	218.19-125T-T3-M07 MS2500	0,60	0,65	0,65	0,70
S11	218.19-125T-T3-M07 MS2050	0,70	0,75	0,75	0,80
S12	218.19-125T-T3-M07 MS2050	0,70	0,75	0,75	0,80
S13	218.19-125T-T3-M07 MS2050	0,60	0,70	0,70	0,75
H5	218.19-125T-T3-MD10 MH1000	0,60	0,85	0,85	0,90
H8	218.19-125T-T3-MD10 MH1000	0,55	0,65	0,65	0,75
H11	218.19-125T-T3-MD08 MP3000	0,60	0,65	0,65	0,75
H12	218.19-125T-T3-M07 T350M	0,60	0,60	0,60	0,65
H21	218.19-125T-T3-MD10 MH1000	0,55	0,65	0,65	0,75

SMG = Seco material group
f_z = mm/tooth
v_c= m/min
a_e/D_c = %
All cutting data are start values

R217/220.21-125 – Cutting data v_c = (m/min)

	MP1500			MP2500			MP3000			T350M			F40M			MK2050		
SMG	100%	70%	30%	100%	70%	30%	100%	70%	30%	100%	70%	30%	100%	70%	30%	100%	70%	30%
P1	280	325	400	295	340	420	280	325	400	255	300	365	225	260	320	245	280	345
P2	270	315	390	285	335	405	270	315	385	250	290	350	215	250	305	235	275	340
P3	240	280	335	250	290	355	240	275	335	220	255	305	190	220	265	210	245	290
P4	210	245	300	220	255	315	210	245	300	195	225	275	170	195	240	185	215	260
P5	200	235	285	215	250	300	205	235	285	190	220	265	165	190	230	175	205	250
P6	225	265	320	240	280	340	230	265	320	210	245	295	185	215	255	200	230	280
P7	215	250	305	230	265	320	215	250	300	200	230	280	175	200	240	185	215	265
P8	200	235	280	210	245	295	200	230	280	185	215	260	160	185	225	175	205	245
P11	210	240	295	220	255	310	210	245	295	195	225	270	170	195	235	180	210	260
M1	—	—	—	205	240	290	205	235	285	195	225	270	175	205	245	—	—	—
M2	—	—	—	175	200	245	170	200	240	160	185	225	145	170	205	—	—	—
M3	—	—	—	140	160	195	135	160	190	130	150	180	120	135	165	—	—	—
M4	—	—	—	110	125	150	105	120	145	100	115	140	90	105	125	—	—	—
M5	—	—	—	90	105	125	90	100	120	85	95	115	75	85	105	—	—	—
K1	215	250	305	225	265	320	215	250	305	—	—	—	170	200	240	255	295	365
K2	190	220	275	205	235	285	195	225	270	—	—	—	155	180	215	230	265	325
K3	160	190	230	175	200	240	165	190	230	—	—	—	130	150	185	195	225	275
K4	155	180	220	165	190	230	155	180	220	—	—	—	125	145	175	185	215	260
K5	95	110	135	100	115	140	95	110	135	—	—	—	75	90	110	115	130	160
K6	135	160	195	145	170	205	140	160	195	—	—	—	110	130	155	160	190	230
K7	120	140	170	130	150	180	120	140	170	—	—	—	95	115	140	145	165	205
N1	—	—	—	—	—	—	—	—	—	—	—	—	630	730	900	—	—	—
N2	—	—	—	—	—	—	—	—	—	—	—	—	510	590	720	—	—	—
N3	—	—	—	—	—	—	—	—	—	—	—	—	340	395	485	—	—	—
N11	—	—	—	—	—	—	—	—	—	—	—	—	390	450	550	—	—	—
S1	—	—	—	—	—	—	50	55	70	47	55	65	43	49	60	—	—	—
S2	—	—	—	—	—	—	40	46	55	38	43	50	35	39	47	—	—	—
S3	—	—	—	—	—	—	36	40	48	34	38	46	31	35	42	—	—	—
S11	—	—	—	—	—	—	70	80	95	65	75	90	60	70	85	—	—	—
S12	—	—	—	—	—	—	40	46	55	38	43	55	34	39	48	—	—	—
S13	—	—	—	—	—	—	32	37	44	31	35	42	28	31	38	—	—	—
H5	47	55	65	45	50	60	44	50	60	43	49	60	37	43	50	—	—	—
H8	50	60	70	48	55	65	47	55	65	46	55	65	40	46	55	—	—	—
H11	60	70	85	55	65	80	55	65	75	55	65	75	48	55	65	—	—	—
H12	90	105	130	85	100	120	85	95	115	85	95	115	70	80	100	—	—	—
H21	50	60	70	48	55	65	47	55	65	46	55	65	40	46	55	—	—	—

R217/220.21-125 – Cutting data v_c = (m/min)

	MM4500			MS2050			MS2500			MH1000			H25		
SMG	100%	70%	30%	100%	70%	30%	100%	70%	30%	100%	70%	30%	100%	70%	30%
P1	180	210	260	—	—	—	320	375	460	—	—	—	—	—	—
P2	175	205	250	—	—	—	315	365	440	—	—	—	—	—	—
P3	155	180	215	—	—	—	275	320	385	—	—	—	—	—	—
P4	135	160	195	—	—	—	240	280	345	—	—	—	—	—	—
P5	130	155	185	—	—	—	235	275	330	—	—	—	—	—	—
P6	150	170	210	—	—	—	265	305	370	—	—	—	—	—	—
P7	140	165	195	—	—	—	250	290	350	—	—	—	—	—	—
P8	130	150	180	—	—	—	230	270	325	—	—	—	—	—	—
P11	135	160	190	—	—	—	240	280	340	—	—	—	—	—	—
M1	150	175	215	230	255	300	225	260	315	—	—	—	—	—	—
M2	125	145	175	190	215	245	190	220	265	—	—	—	—	—	—
M3	100	115	145	150	170	180	150	175	210	—	—	—	—	—	—
M4	80	90	110	110	125	130	120	135	160	—	—	—	—	—	—
M5	65	75	90	90	105	110	100	110	135	—	—	—	—	—	—
K1	—	—	—	—	—	—	—	—	—	210	245	300	—	—	—
K2	—	—	—	—	—	—	—	—	—	185	215	265	—	—	—
K3	—	—	—	—	—	—	—	—	—	160	185	225	—	—	—
K4	—	—	—	—	—	—	—	—	—	150	175	215	—	—	—
K5	—	—	—	—	—	—	—	—	—	90	105	130	—	—	—
K6	—	—	—	—	—	—	—	—	—	135	155	190	—	—	—
K7	—	—	—	—	—	—	—	—	—	120	135	165	—	—	—
N1	—	—	—	—	—	—	—	—	—	—	—	—	670	780	960
N2	—	—	—	—	—	—	—	—	—	—	—	—	540	630	780
N3	—	—	—	—	—	—	—	—	—	—	—	—	360	420	520
N11	—	—	—	—	—	—	—	—	—	—	—	—	410	480	590
S1	24	28	33	42	45	55	60	65	80	—	—	—	—	—	—
S2	20	22	27	34	36	46	46	55	65	—	—	—	—	—	—
S3	17	20	24	31	33	42	41	47	55	—	—	—	—	—	—
S11	34	39	47	55	60	80	80	90	110	—	—	—	—	—	—
S12	26	30	36	41	45	60	46	55	65	—	—	—	—	—	—
S13	21	24	29	36	39	49	37	42	50	—	—	—	—	—	—
H5	—	—	—	—	—	—	—	—	—	46	55	65	—	—	—
H8	—	—	—	—	—	—	—	—	—	50	55	70	—	—	—
H11	—	—	—	—	—	—	—	—	—	60	65	80	—	—	—
H12	—	—	—	—	—	—	—	—	—	90	100	125	—	—	—
H21	—	—	—	—	—	—	—	—	—	50	55	70	—	—	—

R217/220.21-160 – Insert selection

SMG		a_p	f_z		
			100%	70%	30%
P1	218.19-160T-04-M08 T350M	1,8	0,80	0,80	0,90
P2	218.19-160T-04-M08 T350M	1,8	0,80	0,80	0,90
P3	218.19-160T-04-M08 T350M	1,8	0,80	0,80	0,85
P4	218.19-160T-04-MD11 MS2500	1,8	1,0	1,0	1,1
P5	218.19-160T-04-MD11 MS2500	1,8	1,0	1,0	1,1
P6	218.19-160T-04-MD11 MS2500	1,8	1,0	1,0	1,1
P7	218.19-160T-04-MD11 MS2500	1,8	1,0	1,0	1,1
P8	218.19-160T-04-MD11 MP2500	1,8	1,1	1,1	1,2
P11	218.19-160T-04-MD11 MS2500	1,8	1,0	1,0	1,1
M1	218.19-160T-04-M08 F40M	1,8	0,80	0,80	0,90
M2	218.19-160T-04-M08 F40M	1,8	0,75	0,75	0,80
M3	218.19-160T-04-M08 F40M	1,4	0,70	0,70	0,75
M4	218.19-160T-04-M08 F40M	1,1	0,65	0,65	0,75
M5	218.19-160T-04-M08 F40M	1,1	0,65	0,65	0,75
K1	218.19-160T-04-MD11 MK2050	1,8	1,1	1,1	1,2
K2	218.19-160T-04-MD11 MK2050	1,8	1,0	1,0	1,1
K3	218.19-160T-04-MD11 MK2050	1,8	1,0	1,0	1,1
K4	218.19-160T-04-MD11 MK2050	1,8	1,0	1,0	1,1
K5	218.19-160T-04-MD11 MK2050	1,8	0,90	0,90	1,0
K6	218.19-160T-04-MD11 MK2050	1,8	1,0	1,0	1,1
K7	218.19-160T-04-MD11 MK2050	1,8	0,90	0,90	1,0
N1	218.19-160-04-E07 H25	1,8	0,90	0,90	1,0
N2	218.19-160-04-E07 H25	1,8	0,90	0,90	1,0
N3	218.19-160-04-E07 H25	1,8	0,90	0,90	1,0
N11	218.19-160-04-E07 H25	1,8	0,90	0,90	1,0
S1	218.19-160T-04-M08 MS2500	1,1	0,65	0,65	0,75
S2	218.19-160T-04-M08 MS2500	1,1	0,65	0,65	0,75
S3	218.19-160T-04-M08 MS2500	1,1	0,60	0,60	0,70
S11	218.19-160T-04-M08 MS2050	1,3	0,70	0,70	0,75
S12	218.19-160T-04-M08 MS2050	1,3	0,70	0,70	0,75
S13	218.19-160T-04-M08 MS2050	1,1	0,65	0,65	0,75
H5	218.19-160T-04-MD11 MH1000	1,1	0,75	0,75	0,85
H8	218.19-160T-04-MD11 MH1000	1,0	0,85	0,85	0,95
H11	218.19-160T-04-MD09 MP3000	1,1	0,65	0,65	0,70
H12	218.19-160T-04-M08 T350M	1,1	0,55	0,55	0,60
H21	218.19-160T-04-MD11 MH1000	1,0	0,85	0,85	0,95

SMG = Seco material group
f_z = mm/tooth
v_c= m/min
a_e/D_c = %
All cutting data are start values

R217/220.21-160 – Cutting data v_c = (m/min)

	MP1500			MP2500			MP3000			T350M			F15M			F25M		
SMG	100%	70%	30%	100%	70%	30%	100%	70%	30%	100%	70%	30%	100%	70%	30%	100%	70%	30%
P1	275	320	395	240	285	350	275	320	390	250	295	360	—	—	—	240	285	345
P2	265	315	385	235	280	345	265	315	380	245	290	350	—	—	—	235	275	335
P3	230	270	335	205	240	295	230	270	335	210	250	305	—	—	—	200	235	295
P4	210	245	300	185	215	265	205	240	295	190	225	270	—	—	—	180	215	260
P5	200	235	290	175	205	255	195	230	285	180	215	260	—	—	—	170	205	250
P6	225	265	325	195	235	285	220	260	320	200	240	295	—	—	—	195	230	280
P7	210	250	305	185	220	270	210	245	300	190	225	280	—	—	—	185	215	265
P8	190	225	280	170	200	250	190	225	280	175	210	255	—	—	—	170	200	245
P11	205	240	295	180	215	260	200	240	295	185	220	270	—	—	—	175	210	260
M1	—	—	—	170	200	245	200	235	285	190	220	270	—	—	—	—	—	—
M2	—	—	—	140	165	205	165	195	240	155	185	225	—	—	—	—	—	—
M3	—	—	—	115	135	165	130	155	190	125	145	180	—	—	—	—	—	—
M4	—	—	—	90	105	125	105	120	145	100	115	140	—	—	—	—	—	—
M5	—	—	—	75	85	105	85	100	120	85	95	115	—	—	—	—	—	—
K1	210	250	305	185	220	270	210	250	300	—	—	—	170	200	245	—	—	—
K2	190	220	275	165	195	240	185	220	270	—	—	—	150	180	220	—	—	—
K3	160	190	230	140	165	205	155	185	230	—	—	—	130	150	185	—	—	—
K4	150	180	220	135	160	195	150	175	220	—	—	—	125	145	180	—	—	—
K5	95	110	135	85	100	120	95	110	130	—	—	—	75	90	110	—	—	—
K6	135	160	195	120	140	170	130	155	190	—	—	—	110	125	155	—	—	—
K7	120	140	175	105	125	155	120	140	170	—	—	—	95	115	140	—	—	—
N1	—	—	—	—	—	—	—	—	—	—	—	—	—	—	—	—	—	—
N2	—	—	—	—	—	—	—	—	—	—	—	—	—	—	—	—	—	—
N3	—	—	—	—	—	—	—	—	—	—	—	—	—	—	—	—	—	—
N11	—	—	—	—	—	—	—	—	—	—	—	—	—	—	—	—	—	—
S1	—	—	—	—	—	—	49	55	70	46	55	65	—	—	—	—	—	—
S2	—	—	—	—	—	—	39	46	55	37	43	50	—	—	—	—	—	—
S3	—	—	—	—	—	—	35	40	48	33	38	45	—	—	—	—	—	—
S11	—	—	—	—	—	—	65	80	95	65	75	90	—	—	—	—	—	—
S12	—	—	—	—	—	—	39	45	55	37	43	55	—	—	—	—	—	—
S13	—	—	—	—	—	—	31	37	44	30	35	42	—	—	—	—	—	—
H5	47	55	65	—	—	—	43	50	60	42	49	60	38	44	55	41	47	55
H8	50	60	70	—	—	—	46	50	65	45	50	60	41	47	55	43	49	60
H11	60	70	85	—	—	—	55	65	75	55	65	75	48	55	70	50	60	75
H12	90	105	125	—	—	—	85	95	115	80	95	115	75	85	100	80	90	110
H21	50	60	70	—	—	—	46	50	65	45	50	60	41	47	55	43	49	60

R217/220.21-160 – Cutting data v_c = (m/min)

	F40M			MK2050			MS2050			MS2500			MH1000			H25		
SMG	100%	70%	30%	100%	70%	30%	100%	70%	30%	100%	70%	30%	100%	70%	30%	100%	70%	30%
P1	220	255	315	240	280	345	—	—	—	315	370	450	—	—	—	—	—	—
P2	210	250	305	230	275	340	—	—	—	305	360	440	—	—	—	—	—	—
P3	185	215	265	200	235	290	—	—	—	265	310	385	—	—	—	—	—	—
P4	165	195	235	180	215	265	—	—	—	235	280	340	—	—	—	—	—	—
P5	155	185	230	175	205	250	—	—	—	225	265	330	—	—	—	—	—	—
P6	175	205	255	195	230	280	—	—	—	255	300	370	—	—	—	—	—	—
P7	165	195	240	185	215	265	—	—	—	240	280	350	—	—	—	—	—	—
P8	155	180	225	170	200	245	—	—	—	220	260	320	—	—	—	—	—	—
P11	160	190	235	180	210	260	—	—	—	230	275	340	—	—	—	—	—	—
M1	170	200	245	—	—	—	220	250	300	220	260	315	—	—	—	—	—	—
M2	140	165	205	—	—	—	185	210	245	180	215	260	—	—	—	—	—	—
M3	115	135	165	—	—	—	150	165	190	145	170	210	—	—	—	—	—	—
M4	90	105	125	—	—	—	115	130	140	115	135	160	—	—	—	—	—	—
M5	75	85	105	—	—	—	95	105	115	95	110	135	—	—	—	—	—	—
K1	170	200	240	250	295	365	—	—	—	—	—	—	205	240	300	—	—	—
K2	150	175	215	225	265	325	—	—	—	—	—	—	185	215	265	—	—	—
K3	125	150	185	190	225	275	—	—	—	—	—	—	155	185	225	—	—	—
K4	120	140	175	180	215	260	—	—	—	—	—	—	150	175	215	—	—	—
K5	75	90	105	110	130	160	—	—	—	—	—	—	90	110	130	—	—	—
K6	105	125	155	160	190	230	—	—	—	—	—	—	130	155	190	—	—	—
K7	95	115	135	145	170	205	—	—	—	—	—	—	115	140	170	—	—	—
N1	620	730	900	—	—	—	—	—	—	—	—	—	—	—	—	650	770	940
N2	500	590	730	—	—	—	—	—	—	—	—	—	—	—	—	530	620	760
N3	335	395	485	—	—	—	—	—	—	—	—	—	—	—	—	350	415	510
N11	380	450	550	—	—	—	—	—	—	—	—	—	—	—	—	400	470	580
S1	42	49	60	—	—	—	38	42	55	55	65	80	—	—	—	—	—	—
S2	34	39	47	—	—	—	31	34	43	45	55	65	—	—	—	—	—	—
S3	30	35	41	—	—	—	28	31	39	40	46	55	—	—	—	—	—	—
S11	60	70	85	—	—	—	49	55	75	80	90	110	—	—	—	—	—	—
S12	34	39	48	—	—	—	37	42	55	45	50	65	—	—	—	—	—	—
S13	27	32	38	—	—	—	33	36	46	36	42	50	—	—	—	—	—	—
H5	37	43	50	—	—	—	—	—	—	—	—	—	46	55	65	—	—	—
H8	39	45	55	—	—	—	—	—	—	—	—	—	49	55	70	—	—	—
H11	47	55	65	—	—	—	—	—	—	—	—	—	60	70	80	—	—	—
H12	70	85	100	—	—	—	—	—	—	—	—	—	90	100	125	—	—	—
H21	39	45	55	—	—	—	—	—	—	—	—	—	49	55	70	—	—	—

R220.21C

High feed cutters

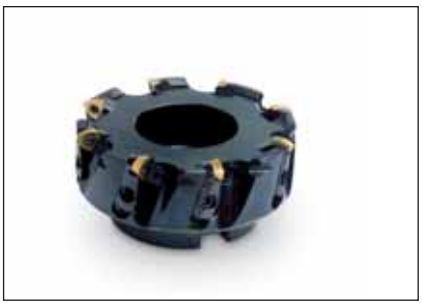

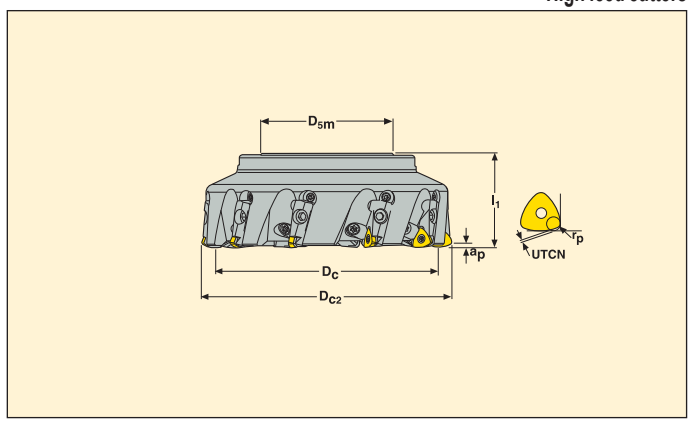

- For insert selection and cutting data recommendations, see page(s) 429-430
- For complete insert programme, see page(s) 645

Part No.	Type of mounting	Dimensions in mm a_p	D_{c2}	D_c	D_{5m}	dm_m	l_1	UTCN	r_p		KG		Insert
R220.21 -0088-R160.5C	Arbor	2,5	88	70	62	27	50	1,21	3,53	5	1,5	7200	218.19-160..
-0108-R160.6C	Arbor	2,5	108	90	77	32	50	1,21	3,53	6	2,3	6500	218.19-160..
-0133-R160.8C	Arbor	2,5	133	115	90	40	63	1,21	3,53	8	3,7	5900	218.19-160..
-8168-R160.10C	Arbor	2,5	168	150	90	40	63	1,21	3,53	10	5,8	5200	218.19-160..
-8208-R160.12C	Arbor	2,5	208	190	90	60	63	1,21	3,53	12	8,7	4700	218.19-160..

UTCN = Uncut thickness, deviation between programmed corner radii (r_p) and generated machined profile.
Ramping angle = $\alpha°$

Spare Parts

For cutter	Wedge screw	Setting gauge	Insert wedge	Insert screw	Insert key	Cassette screw	Cassette	Arbor screw
R220.21-0088	LD8020-T25P	AU1114T-T15P	334.5-640M	C03508-T15P	T15P-4	FS96018	218.19-160ZR	MC6S12X35
R220.21-0108	LD8020-T25P	AU1114T-T15P	334.5-640M		C03508-T15P	FS96018	218.19-160ZR	220.17-694
R220.21-0133-8208	LD8020-T25P	AU1114T-T15P	334.5-640M	C03508-T15P	T15P-4	FS96018	218.19-160ZR	

Please check availability in current price and stock-list
Torque value 3,0 Nm, Torque keys, see page 690

R217/220.21-C – Insert selection

SMG		a_p	f_z		
			100%	70%	30%
P1	218.19-160T-04-M08 F25M	2,5	0,70	0,70	0,75
P2	218.19-160T-04-M08 F25M	2,5	0,70	0,70	0,75
P3	218.19-160T-04-M08 F25M	2,5	0,65	0,65	0,70
P4	218.19-160T-04-MD11 F25M	2,5	0,90	0,90	0,95
P5	218.19-160T-04-MD11 F25M	2,5	0,85	0,85	0,95
P6	218.19-160T-04-MD11 F25M	2,5	0,85	0,85	0,95
P7	218.19-160T-04-MD11 F25M	2,5	0,85	0,85	0,95
P8	218.19-160T-04-MD11 F25M	2,5	0,90	0,90	1,0
P11	218.19-160T-04-MD11 F25M	2,5	0,85	0,85	0,95
M1	218.19-160T-04-M08 T350M	2,5	0,70	0,70	0,75
M2	218.19-160T-04-M08 T350M	2,5	0,65	0,65	0,70
M3	218.19-160T-04-M08 T350M	2,0	0,55	0,55	0,60
M4	218.19-160T-04-M08 T350M	1,5	0,55	0,55	0,60
M5	218.19-160T-04-M08 T350M	1,5	0,55	0,55	0,60
K1	218.19-160T-04-MD11 F15M	2,5	0,95	0,95	1,0
K2	218.19-160T-04-MD11 F15M	2,5	0,85	0,85	0,95
K3	218.19-160T-04-MD11 F15M	2,5	0,85	0,85	0,95
K4	218.19-160T-04-MD11 F15M	2,5	0,85	0,85	0,95
K5	218.19-160T-04-MD11 F15M	2,5	0,80	0,80	0,85
K6	218.19-160T-04-MD11 F15M	2,5	0,85	0,85	0,95
K7	218.19-160T-04-MD11 F15M	2,5	0,80	0,80	0,85
N1	218.19-160-04-E07 H25	2,5	0,80	0,80	0,85
N2	218.19-160-04-E07 H25	2,5	0,80	0,80	0,85
N3	218.19-160-04-E07 H25	2,5	0,80	0,80	0,85
N11	218.19-160-04-E07 H25	2,5	0,80	0,80	0,85
S1	218.19-160T-04-M08 T350M	1,5	0,55	0,55	0,60
S2	218.19-160T-04-M08 T350M	1,5	0,55	0,55	0,60
S3	218.19-160T-04-M08 T350M	1,5	0,55	0,55	0,60
S11	218.19-160T-04-M08 MS2050	1,8	0,60	0,60	0,65
S12	218.19-160T-04-M08 MS2050	1,8	0,60	0,60	0,65
S13	218.19-160T-04-M08 MS2050	1,5	0,55	0,55	0,60
H5	218.19-160T-04-MD11 MH1000	1,6	0,65	0,65	0,70
H8	218.19-160T-04-MD11 MH1000	1,4	0,50	0,50	0,55
H11	218.19-160T-04-MD09 MP3000	1,6	0,50	0,50	0,55
H12	218.19-160T-04-M08 T350M	1,6	0,46	0,46	0,50
H21	218.19-160T-04-MD11 MH1000	1,4	0,50	0,50	0,55

SMG = Seco material group
f_z = mm/tooth
v_c= m/min
a_e/D_c = %
All cutting data are start values

R217/220.21-C – Cutting data v_c = (m/min)

	MP1500			MP2500			T350M			F15M			F25M			F40M		
SMG	100%	70%	30%	100%	70%	30%	100%	70%	30%	100%	70%	30%	100%	70%	30%	100%	70%	30%
P1	285	320	400	250	285	355	235	265	325	—	—	—	190	215	265	205	230	285
P2	275	310	390	245	275	345	230	255	320	—	—	—	185	205	260	200	225	275
P3	240	275	335	215	240	295	200	225	280	—	—	—	160	180	225	175	195	245
P4	215	240	300	190	215	265	175	200	245	—	—	—	140	160	200	155	175	215
P5	205	235	285	185	205	255	170	190	235	—	—	—	140	155	190	145	165	205
P6	235	265	320	205	235	285	190	215	265	—	—	—	155	175	215	165	185	230
P7	220	250	305	195	220	270	180	200	250	—	—	—	145	165	200	155	175	215
P8	205	230	280	180	205	250	170	190	235	—	—	—	135	155	185	145	165	205
P11	215	240	295	190	215	260	175	195	240	—	—	—	140	160	195	150	170	210
M1	—	—	—	175	200	250	175	200	245	—	—	—	—	—	—	160	180	225
M2	—	—	—	150	165	205	145	165	200	—	—	—	—	—	—	130	150	185
M3	—	—	—	120	135	165	120	135	165	—	—	—	—	—	—	110	125	150
M4	—	—	—	95	105	130	95	105	125	—	—	—	—	—	—	85	95	115
M5	—	—	—	80	85	110	80	90	105	—	—	—	—	—	—	70	80	95
K1	220	245	310	195	220	275	—	—	—	160	180	225	145	165	205	155	175	220
K2	195	220	270	175	195	240	—	—	—	145	160	195	130	150	180	140	155	195
K3	165	190	230	150	165	205	—	—	—	120	135	165	110	125	155	120	135	165
K4	160	180	220	140	160	195	—	—	—	115	130	160	105	120	145	110	125	155
K5	95	110	135	85	95	120	—	—	—	70	80	100	65	70	90	70	80	95
K6	140	160	195	125	140	170	—	—	—	100	115	140	95	105	130	100	110	140
K7	125	140	175	110	125	155	—	—	—	90	100	125	80	95	115	90	100	125
N1	—	—	—	—	—	—	—	—	—	—	—	—	—	—	—	570	650	800
N2	—	—	—	—	—	—	—	—	—	—	—	—	—	—	—	460	520	650
N3	—	—	—	—	—	—	—	—	—	—	—	—	—	—	—	310	345	435
N11	—	—	—	—	—	—	—	—	—	—	—	—	—	—	—	350	395	495
S1	—	—	—	—	—	—	44	49	60	—	—	—	—	—	—	40	45	55
S2	—	—	—	—	—	—	35	40	47	—	—	—	—	—	—	32	36	43
S3	—	—	—	—	—	—	30	34	42	—	—	—	—	—	—	28	31	38
S11	—	—	—	—	—	—	60	70	85	—	—	—	—	—	—	55	60	75
S12	—	—	—	—	—	—	35	39	48	—	—	—	—	—	—	32	36	43
S13	—	—	—	—	—	—	28	32	38	—	—	—	—	—	—	26	29	34
H5	49	55	65	39	44	55	40	45	55	35	40	49	—	—	—	35	39	48
H8	55	60	75	43	48	60	43	48	60	39	44	55	—	—	—	37	42	50
H11	60	70	85	50	55	70	50	55	70	45	50	60	—	—	—	44	50	60
H12	95	105	130	75	85	105	75	85	105	70	75	95	—	—	—	65	75	90
H21	55	60	75	43	48	60	43	48	60	39	44	55	—	—	—	37	42	50

R217/220.21-C – Cutting data v_c = (m/min)

	MK2050			MS2050			MS2500			MH1000			H25		
SMG	100%	70%	30%	100%	70%	30%	100%	70%	30%	100%	70%	30%	100%	70%	30%
P1	225	250	315	—	—	—	275	310	385	—	—	—	—	—	—
P2	215	245	305	—	—	—	265	300	375	—	—	—	—	—	—
P3	190	215	265	—	—	—	235	265	325	—	—	—	—	—	—
P4	165	190	235	—	—	—	205	230	290	—	—	—	—	—	—
P5	165	185	225	—	—	—	200	225	275	—	—	—	—	—	—
P6	185	205	250	—	—	—	225	255	310	—	—	—	—	—	—
P7	175	195	240	—	—	—	210	240	295	—	—	—	—	—	—
P8	160	180	220	—	—	—	195	220	270	—	—	—	—	—	—
P11	170	190	230	—	—	—	205	235	285	—	—	—	—	—	—
M1	—	—	—	205	220	275	190	215	270	—	—	—	—	—	—
M2	—	—	—	170	185	225	160	180	220	—	—	—	—	—	—
M3	—	—	—	140	155	175	130	145	180	—	—	—	—	—	—
M4	—	—	—	110	120	130	100	115	140	—	—	—	—	—	—
M5	—	—	—	90	100	110	85	95	115	—	—	—	—	—	—
K1	235	265	330	—	—	—	—	—	—	190	215	270	—	—	—
K2	210	240	290	—	—	—	—	—	—	170	195	240	—	—	—
K3	180	200	245	—	—	—	—	—	—	145	165	200	—	—	—
K4	170	190	235	—	—	—	—	—	—	140	155	190	—	—	—
K5	105	115	145	—	—	—	—	—	—	85	95	120	—	—	—
K6	150	170	205	—	—	—	—	—	—	125	140	170	—	—	—
K7	130	150	185	—	—	—	—	—	—	110	120	150	—	—	—
N1	—	—	—	—	—	—	—	—	—	—	—	—	600	680	850
N2	—	—	—	—	—	—	—	—	—	—	—	—	490	550	680
N3	—	—	—	—	—	—	—	—	—	—	—	—	325	365	455
N11	—	—	—	—	—	—	—	—	—	—	—	—	370	420	520
S1	—	—	—	36	38	48	50	55	70	—	—	—	—	—	—
S2	—	—	—	29	31	38	40	45	55	—	—	—	—	—	—
S3	—	—	—	25	27	35	35	39	48	—	—	—	—	—	—
S11	—	—	—	45	48	65	70	80	95	—	—	—	—	—	—
S12	—	—	—	35	37	50	40	45	55	—	—	—	—	—	—
S13	—	—	—	31	33	41	32	36	44	—	—	—	—	—	—
H5	—	—	—	—	—	—	—	—	—	43	48	60	—	—	—
H8	—	—	—	—	—	—	—	—	—	47	55	65	—	—	—
H11	—	—	—	—	—	—	—	—	—	55	60	75	—	—	—
H12	—	—	—	—	—	—	—	—	—	80	90	115	—	—	—
H21	—	—	—	—	—	—	—	—	—	47	55	65	—	—	—

R220.21SC

High feed cutters

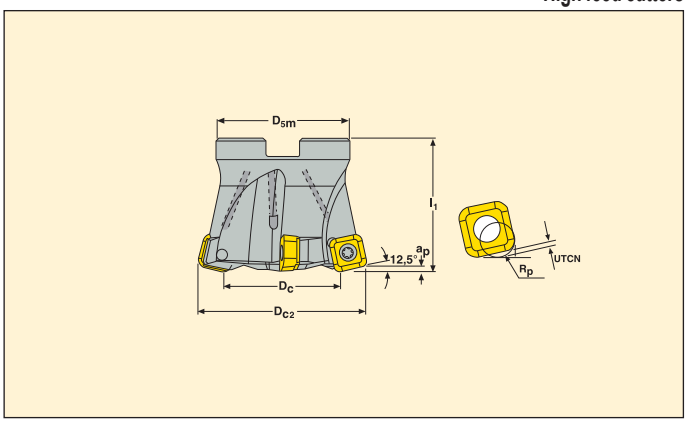

- For insert selection and cutting data recommendations, see page(s) 432-433
- For complete insert programme, see page(s) 617

Part No.	Type of mounting	Dimensions in mm a_p	D_{c2}	D_c	D_{5m}	dm_m	l_1	UTCN	r_p	α° max		KG		Insert
R220.21 -0050-SC12.4A	Arbor	2	50	31	42	22	40	1,1	4,4	2,3	4	0,3	10700	SCET120630T
R220.21 -0052-SC12.4A	Arbor	2	52	33	42	22	40	1,1	4,4	2,2	4	0,3	10500	SCET120630T
R220.21 -0063-SC12.4A	Arbor	2	63	44	50	27	50	1,1	4,4	0,9	4	0,6	9600	SCET120630T
-0063-SC12.5A	Arbor	2	63	44	50	27	50	1,1	4,4	0,9	5	0,6	9600	SCET120630T
R220.21 -0066-SC12.4A	Arbor	2	66	47	60	27	50	1,1	4,4	0,85	4	0,6	9400	SCET120630T
R220.21 -0080-SC12.5A	Arbor	2	80	61	62	27	50	1,1	4,4	0,8	5	1,0	8500	SCET120630T
-0080-SC12.6A	Arbor	2	80	61	62	27	50	1,1	4,4	0,8	6	1,0	8500	SCET120630T
R220.21 -0084-SC12.5A	Arbor	2	84	65	77	32	55	1,1	4,4	0,8	5	1,2	8300	SCET120630T
R220.21 -0100-SC12.5A	Arbor	2	100	81	77	32	50	1,1	4,4	0,75	5	1,3	7600	SCET120630T
-0100-SC12.7A	Arbor	2	100	81	77	32	50	1,1	4,4	0,75	7	1,5	7600	SCET120630T
R220.21 -0125-SC12.6A	Arbor	2	125	106	90	40	63	1,1	4,4	0,7	6	2,4	6800	SCET120630T
R220.21 -8160-SC12.7	Arbor	2	160	141	90	40	63	1,1	4,4	–	7	3,8	6000	SCET120630T

UTCN = Uncut thickness, deviation between programmed corner radii (r_p) and generated machined profile.
Ramping angle = α°

Spare Parts

For cutter	Insert screw	Insert key	Arbor screw
		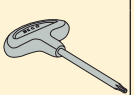	
R220.21-0050-0052	C45011-T20P	T20P-4	–
R220.21-0063-0080	C45011-T20P	T20P-4	MC6S12X35
R220.21-0084	C45011-T20P	T20P-4	MC6S16X40
R220.21-0100	C45011-T20P	T20P-4	MLC6S16X35
R220.21-0125-8160	C45011-T20P	T20P-4	–

Please check availability in current price and stock-list
Torque value 5,0 Nm, Torque keys, see page 690

R220.21-SC12– Insert selection

SMG		a_p	f_z		
			100%	70%	30%
P1	SCET120630T-M14 T350M	1,0	0,95	0,95	1,1
P2	SCET120630T-M14 T350M	1,0	1,0	1,0	1,1
P3	SCET120630T-M14 T350M	1,0	0,95	0,95	1,0
P4	SCET120630T-MD16 MS2500	1,0	1,0	1,0	1,1
P5	SCET120630T-MD16 MS2500	1,0	1,0	1,0	1,1
P6	SCET120630T-MD16 MS2500	1,0	1,0	1,0	1,1
P7	SCET120630T-MD16 MS2500	1,0	1,0	1,0	1,1
P8	SCET120630T-MD16 MP2500	1,0	1,1	1,1	1,2
P11	SCET120630T-MD16 MS2500	1,0	1,0	1,0	1,1
M1	SCET120630T-M14 F40M	1,0	1,0	1,0	1,1
M2	SCET120630T-M14 F40M	1,0	0,90	0,90	1,0
M3	SCET120630T-M14 F40M	0,75	0,75	0,75	0,80
M4	SCET120630T-M14 F40M	0,60	0,65	0,65	0,70
M5	SCET120630T-M14 F40M	0,60	0,65	0,65	0,70
K1	SCET120630T-MD16 MP1500	1,0	1,1	1,1	1,2
K2	SCET120630T-MD16 MP1500	1,0	1,0	1,0	1,1
K3	SCET120630T-MD16 MP1500	1,0	1,0	1,0	1,1
K4	SCET120630T-MD16 MP1500	1,0	1,0	1,0	1,1
K5	SCET120630T-MD16 MP1500	1,0	0,95	0,95	1,0
K6	SCET120630T-MD16 MP1500	1,0	1,0	1,0	1,1
K7	SCET120630T-MD16 MP1500	1,0	0,95	0,95	1,0
S1	SCET120630T-M14 MS2500	0,60	0,65	0,65	0,70
S2	SCET120630T-M14 MS2500	0,60	0,65	0,65	0,70
S3	SCET120630T-M14 MS2500	0,60	0,60	0,60	0,65
S11	SCET120630T-M14 MS2500	0,70	0,75	0,75	0,80
S12	SCET120630T-M14 MS2500	0,70	0,75	0,75	0,80
S13	SCET120630T-M14 MS2500	0,60	0,65	0,65	0,70
H5	SCET120630T-MD16 MP1500	0,75	0,70	0,70	0,80
H8	SCET120630T-MD16 MP1500	0,70	0,55	0,55	0,60
H11	SCET120630T-MD16 T350M	0,75	0,70	0,70	0,80
H12	SCET120630T-MD16 T350M	0,75	0,70	0,70	0,80
H21	SCET120630T-MD16 MP1500	0,70	0,55	0,55	0,60

SMG = Seco material group
f_z = mm/tooth
v_c= m/min
a_e/D_c = %
All cutting data are start values

R220.21-SC12 – Cutting data v_c = (m/min)

	MP1500			MP2500			MP3000			T350M			F40M			MK2050		
SMG	100%	70%	30%	100%	70%	30%	100%	70%	30%	100%	70%	30%	100%	70%	30%	100%	70%	30%
P1	305	345	430	270	305	380	265	305	370	245	280	340	215	245	295	280	315	385
P2	295	335	415	260	300	370	255	290	360	235	270	330	205	235	285	265	305	375
P3	255	290	360	225	255	320	225	255	315	205	235	290	180	205	255	235	265	330
P4	230	265	325	205	235	285	200	230	280	185	210	255	160	180	225	210	235	290
P5	220	250	310	195	225	275	190	220	265	175	200	245	155	175	215	200	225	280
P6	250	280	345	220	250	310	215	245	305	195	225	280	170	195	245	225	255	315
P7	235	265	330	205	235	290	200	230	285	185	210	265	160	185	230	210	240	300
P8	215	245	300	190	215	265	190	215	265	175	195	245	150	170	215	195	225	280
P11	225	260	320	200	230	280	195	225	280	180	205	255	155	180	225	205	235	290
M1	—	—	—	190	215	265	190	220	270	180	205	255	165	190	230	—	—	—
M2	—	—	—	155	180	220	160	180	225	150	170	210	140	155	190	—	—	—
M3	—	—	—	125	140	175	130	145	180	120	135	170	110	125	155	—	—	—
M4	—	—	—	95	110	135	100	110	135	95	105	130	85	95	115	—	—	—
M5	—	—	—	80	90	110	85	95	115	80	90	110	70	80	100	—	—	—
K1	235	265	330	210	235	290	205	230	285	—	—	—	160	185	225	285	325	405
K2	210	240	295	185	210	260	180	205	255	—	—	—	145	165	205	255	295	360
K3	175	200	250	155	180	220	155	175	215	—	—	—	125	140	170	215	250	305
K4	170	195	235	150	170	210	145	165	205	—	—	—	115	135	165	205	235	290
K5	100	115	145	90	105	130	90	105	125	—	—	—	70	80	100	130	145	180
K6	150	170	210	130	150	185	130	145	180	—	—	—	105	120	145	185	210	255
K7	130	150	185	115	130	165	115	130	160	—	—	—	90	105	130	165	185	230
N1	—	—	—	—	—	—	—	—	—	—	—	—	590	670	840	—	—	—
N2	—	—	—	—	—	—	—	—	—	—	—	—	475	540	680	—	—	—
N3	—	—	—	—	—	—	—	—	—	—	—	—	320	360	450	—	—	—
N11	—	—	—	—	—	—	—	—	—	—	—	—	365	415	510	—	—	—
S1	—	—	—	—	—	—	46	50	65	44	49	60	40	45	55	—	—	—
S2	—	—	—	—	—	—	37	42	50	35	40	49	32	36	44	—	—	—
S3	—	—	—	—	—	—	33	37	45	31	35	43	28	32	39	—	—	—
S11	—	—	—	—	—	—	65	75	90	60	70	85	55	65	75	—	—	—
S12	—	—	—	—	—	—	37	42	50	35	40	49	32	36	44	—	—	—
S13	—	—	—	—	—	—	30	34	41	28	32	39	26	29	35	—	—	—
H5	49	55	70	—	—	—	40	45	55	40	45	55	34	39	48	—	—	—
H8	50	60	70	—	—	—	43	48	60	42	47	60	36	41	50	—	—	—
H11	65	70	85	—	—	—	50	60	70	50	55	70	44	49	60	—	—	—
H12	95	105	130	—	—	—	75	85	105	75	85	105	65	75	90	—	—	—
H21	50	60	70	—	—	—	43	48	60	42	47	60	36	41	50	—	—	—

R220.21-SC12 – Cutting data v_c = (m/min)

	MS2500		
SMG	100%	70%	30%
P1	305	350	425
P2	295	335	415
P3	260	295	365
P4	230	265	320
P5	220	250	305
P6	245	280	350
P7	235	265	330
P8	215	245	305
P11	225	260	320
M1	210	240	295
M2	175	200	245
M3	140	160	195
M4	110	125	150
M5	90	105	125
K1	—	—	—
K2	—	—	—
K3	—	—	—
K4	—	—	—
K5	—	—	—
K6	—	—	—
K7	—	—	—
N1	—	—	—
N2	—	—	—
N3	—	—	—
N11	—	—	—
S1	55	60	75
S2	43	48	60
S3	38	43	50
S11	75	85	105
S12	43	48	60
S13	35	39	47
H5	—	—	—
H8	—	—	—
H11	—	—	—
H12	—	—	—
H21	—	—	—

R220.21-ON09

High feed cutters

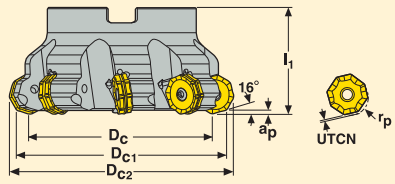

- For insert selection and cutting data recommendations, see page(s) 435-435
- For complete insert programme, see page(s) 613

Part No.	Type of mounting	Dimensions in mm a_p	D_{c2}	D_c	D_{c1}	D_{5m}	dm_m	l_1	UTCN	r_p		KG		Insert
R220.21 -0080-ON09-6A	Arbor	2,4	89,9	65,35	80	62,0	27,0	50,0	0,85	10,28	6	1,0	4400	ON..09
-0100-ON09-7A	Arbor	2,4	109,9	85,35	100	77,0	32,0	50,0	0,85	10,28	7	1,5	3900	ON..09
-0125-ON09-8A	Arbor	2,4	134,9	110,35	125,0	90,0	40,0	63,0	0,85	10,28	8	2,9	3500	ON..09
-8160-ON09-10	Arbor	2,0	169,9	145,35	160	90,0	40,0	63,0	0,85	10,28	10	4,1	3100	ON..09

UTCN = Uncut thickness, deviation between programmed corner radii (r_p) and generated machined profile.
Ramping angle = $\alpha°$

Spare Parts

For cutter	Insert screw	Insert key	Arbor screw
R220.21-0080	C05013-T20P	T20P-4	MC6S12X35
R220.21-0100-8160	C05013-T20P	T20P-4	–

Please check availability in current price and stock-list
Torque value 1,0 Nm. Torque keys, see page 690

R220.21-ON09 – Insert selection

SMG		a_p	f_z		
			100%	70%	30%
P1	ONMU090520ANTN-M12 MP2500	1,4	0,60	0,60	0,65
P2	ONMU090520ANTN-M12 MP2500	1,4	0,60	0,60	0,70
P3	ONMU090520ANTN-M12 MP2500	1,4	0,60	0,60	0,65
P4	ONMU090520ANTN-M12 MP2500	1,4	0,60	0,60	0,65
P5	ONMU090520ANTN-M12 MP2500	1,4	0,55	0,55	0,60
P6	ONMU090520ANTN-M12 MP2500	1,4	0,55	0,55	0,60
P7	ONMU090520ANTN-MD16 MP1500	1,4	0,75	0,75	0,80
P8	ONMU090520ANTN-MD16 MP1500	1,4	0,80	0,80	0,85
P11	ONMU090520ANTN-MD16 MP1500	1,4	0,75	0,75	0,80
K1	ONMU090520ANTN-M14 MK2050	1,4	0,75	0,75	0,80
K2	ONMU090520ANTN-M14 MK2050	1,4	0,65	0,65	0,70
K3	ONMU090520ANTN-M14 MK2050	1,4	0,65	0,65	0,70
K4	ONMU090520ANTN-M14 MK2050	1,4	0,65	0,65	0,70
K5	ONMU090520ANTN-M14 MK2050	1,4	0,60	0,60	0,65
K6	ONMU090520ANTN-MD16 MK1500	1,4	0,75	0,75	0,85
K7	ONMU090520ANTN-MD16 MK1500	1,4	0,70	0,70	0,75

SMG = Seco material group
f_z = mm/tooth
v_c= m/min
a_e/D_c = %
All cutting data are start values

R220.21-ON09 – Cutting data v_c = (m/min)

SMG	MP1500			MP2500			MK1500			MK2050		
	100%	70%	30%	100%	70%	30%	100%	70%	30%	100%	70%	30%
P1	315	350	430	280	310	380	—	—	—	255	280	340
P2	305	345	410	270	305	365	—	—	—	240	270	330
P3	265	295	360	235	260	320	—	—	—	210	235	290
P4	235	260	320	205	230	280	—	—	—	190	215	255
P5	230	255	310	200	225	275	—	—	—	185	205	250
P6	255	285	350	225	255	310	—	—	—	205	230	280
P7	240	270	330	215	240	290	—	—	—	195	215	265
P8	220	250	305	195	220	270	—	—	—	180	200	245
P11	235	260	320	210	230	285	—	—	—	190	210	255
K1	245	270	325	215	240	290	275	305	380	260	290	360
K2	215	240	295	190	215	260	250	280	340	235	265	325
K3	185	205	250	160	180	220	210	235	290	200	225	275
K4	175	195	240	155	175	210	200	225	275	190	210	260
K5	105	120	145	95	105	130	125	135	170	115	130	160
K6	155	170	210	135	150	185	175	200	245	170	185	230
K7	135	155	185	120	135	165	155	175	215	150	165	205

Code key shanks

Connecting size
MP=Minimaster Plus

Shank length

Angle of
tapered part

MP12 - 16 107 - 036 . 00 - E

Shank diameter

Access length

E=Carbide

Code key inserts

System size

Cutting edge
length in mm

No. of flutes

Insert grade

MP12 - 120 14 R12 Z3 - M04 , MP3000

Insert diameter

Type
R12=Corner radii (12=1,2mm)
B90=Ball nose
KW=Keyway

Geometry

System size

For short cutting edge
length in mm

No. of flutes

Insert grade

MP12 - 120 0.7 HF Z3 - MD10 , MP3000

Insert diameter

Type
HF=High feed

Geometry

Internal through coolant

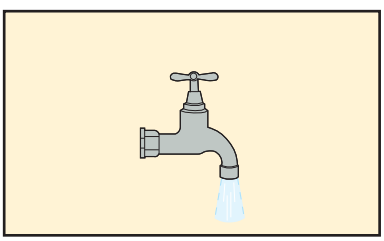

Choice of insert, shank and cutting data

Select taper size

- The design of the workpiece and the machining operations determines suitable taper size

- Select the largest possible taper size for best strength and stability.

Select insert

- Use the tables beginning on page 692 to classify the workpiece material into a Seco material group.

- Look up the pages for the selected taper size and choose a suitable insert in the insert selection table.

Select shank

- Look up the pages for the selected taper size and choose a suitable shank in the tool data table.

- Always choose the shortest shank possible (to get maximum stability).

Select cutting data

- Maximum recommended axial cutting depth is in the cutting data conversion table. (See figure 1.)

- Cutting speed recommendations are in the cutting data tables

Notice that the recommendations are for a fully engaged cutter in stable machining condition.

- Maximum RPM that for safety reasons should never be exceeded are shown on each shank page.

- Feed per tooth f_z recommendations are in the cutting data conversion table.

- **If the cutter is not fully engaged** the feed per tooth and the cutting speed should be increased compared to the recommendations for a fully engaged cutter. The reason for that is to keep the average chip thickness and the working temperature in the cutting zone at the same value as for a fully engaged cutter. (See figure 2.)

- Divide the radial cutting depth with the cutter diameter to get the actual cutter engagement percentage (a_e/D_c%).

- Use the percentage to get a correct feed per tooth and cutting speed recommendation for the actual cutter engagement.

- When calculating feed per revolution and feed speed always use the z_c-value. That is the effective number of teeth to use for cutting data calculation. The z_c-value is in the insert selection table.

- Notice that there will be a deterioration of the surface finish on the workpiece when the feed rate is increased (See figure 3).

- When milling in corners and bottoms of cavities the feed rate should be reduced due to the increase of the chip thickness. Use the feed per tooth recommendations for a fully engaged cutter. (See figure 4.)

- **When steep down copying** with an angle bigger than 40° or steep up copying with an angle bigger than 30° in combination with small depths of cut use the diameter (D_c) as working diameter instead of D_w (See figure 5)

- **Calculate surface finish.** Use the profile height value (H) from the cutting data conversion table to calculate the expected surface finish for the actual operation. (See figure 5).

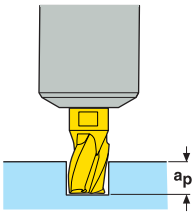

Figure 1

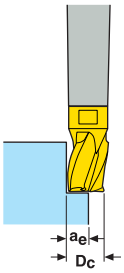

Figure 2

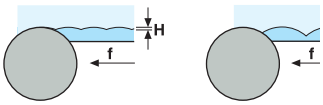

Figure 3

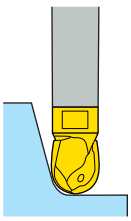

Figure 4

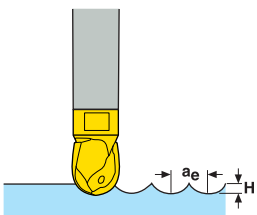

Figure 5

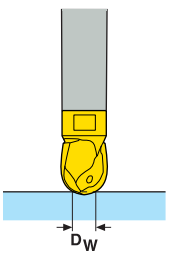

Torque wrench information

We recommend a torque wrench when mounting the insert
for best precision and extended tool life.

Different torque values for assembly
– MP10: 11Nm
– MP12: 15Nm
– MP16: 19Nm
Do not use worn out replaceable blades

Before mounting the insert make sure to lubricate the contact surface
for extended tool life, trouble free mounting and dismantling.

Note: Torque wrenches and standard keys must be ordered separately!

User instructions Torque wrench

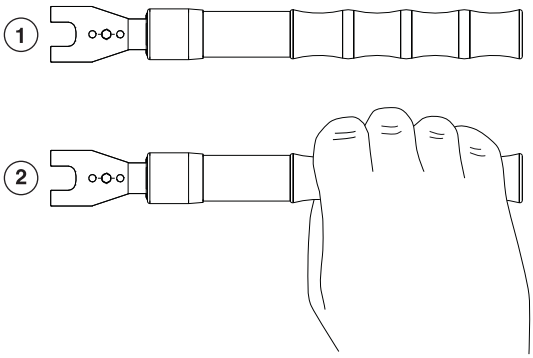

Use the arched handle (fig. 1) to grip the wrench by hand as shown (fig. 2)

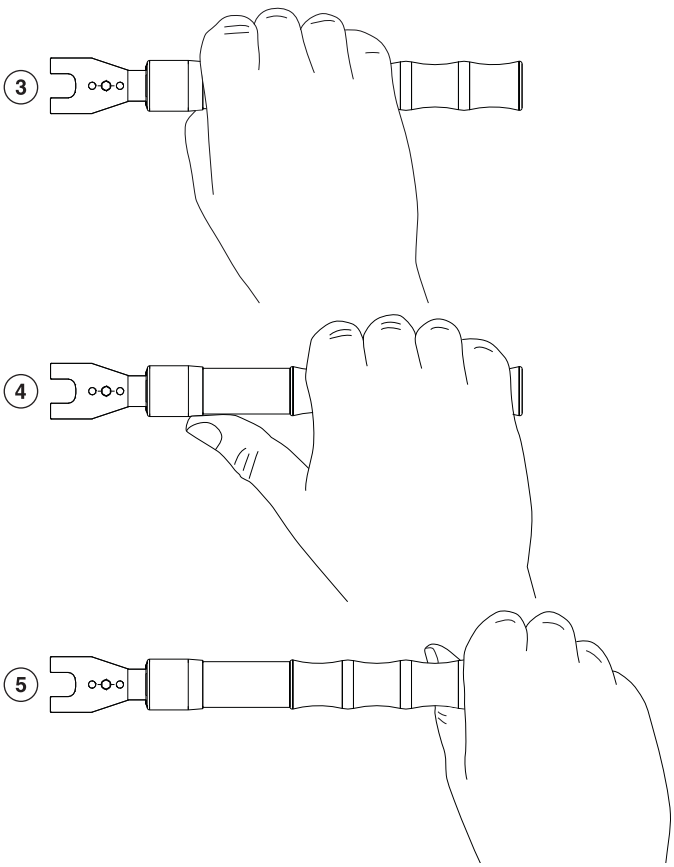

Do not grip the wrench as shown on figure 3-5, there is a risk that the applied torque might be incorrect and the insert will not be properly seated.

MP10 Shanks

Design 1

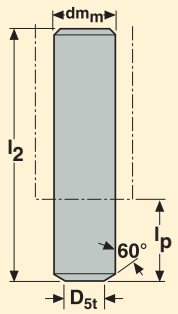

Design 2

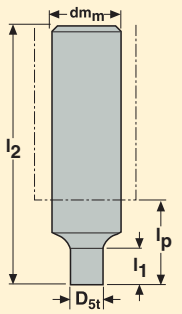

Design 3

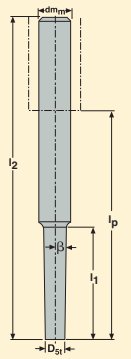

Design 4

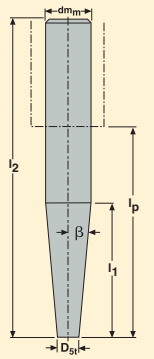

- Cylindrical shank dm_m with tolerance h5, compatible for Shrinkfit.
- Max RPM 80000 r/min

Part No.	Connecting size	Dimensions in mm								KG
		D_{5t}	dm_m	l_2	l_p	l_1	β°	Design		
MP10 -10055-010.00	MP10	9,8	10	55	15	10	0	2	✓	0,1
-16068-000.60	MP10	9,5	16	68	20	0	60	1	✓	0,1
-16073-015.00	MP10	9,8	16	73	25	15	0	2	✓	0,1
-16118-035.01	MP10	9,5	16	118	70	35	1	3	✓	0,2
-16158-060.01	MP10	9,5	16	158	110	60	1	3	✓	0,2
-20100-045.03	MP10	9,5	20	100	50	45	3	3	✓	0,2
-20140-085.03	MP10	9,5	20	140	90	85	3	3	✓	0,3
-20140-090.05	MP10	9,5	20	140	90	60	5	4	✓	0,3
MP10 -12095-030.00-E	MP10	9,8	12	95	50	30	0	2	✓	0,2
-12105-040.00-E	MP10	9,8	12	105	60	40	0	2	✓	0,2
-12125-060.00-E	MP10	9,8	12	125	80	60	0	2	✓	0,2
-16120-050.01-E	MP10	9,5	16	120	72	50	1	3	✓	0,3
-16150-080.01-E	MP10	9,5	16	150	102	80	1	3	✓	0,3
-16170-100.01-E	MP10	9,5	16	170	122	100	1	3	✓	0,4
-16140-092.03-E	MP10	9,5	16	140	92	62	3	4	✓	0,4
-16170-122.03-E	MP10	9,5	16	170	122	62	3	4	✓	0,4

Accessories

Inserts	Torque key	Replacement blade	Key
MP10	MP00-10.110	MP00-10M	MP1016

Blades are included with the torque key

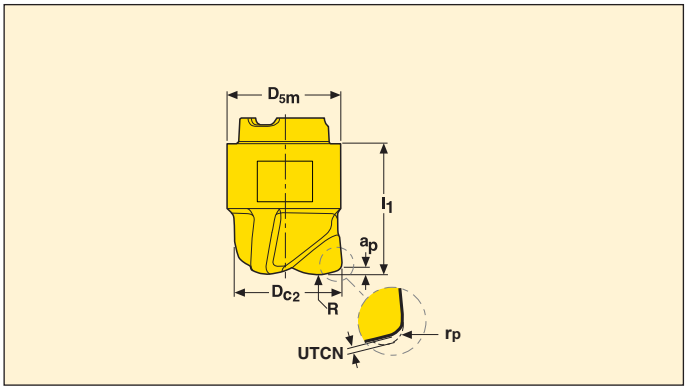

Z3

Part No.	Dimensions in mm							Z_c*		Coated				
										Grades				
	a_p	D_{c2}	R	r_p	D_{5m}	l_1	UTCN			MP3000	F40M			
MP10 -1000.6HFZ3-MD08	0,6	10	6,2	1,13	9,6	11,0	0,32	3	✓	■				

*Effective number of flutes
UTCN = Uncut thickness, deviation between programmed corner radii (r_p) and generated machined profile.

MP10 Square shoulder

Slotting and contouring

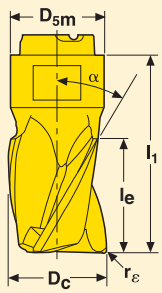

Z3

Part No.	Dimensions in mm D_c	r_ε	l_e	D_{5m}	l_1	α°	Z_c*		Coated Grades MP3000	F40M			
MP10 -09807KWZ3-E03	9,8	0,3	7,0	9,6	16,0	30	3	✓		■			
-10007R04Z3-E03	10,0	0,4	7,0	9,6	16,0	30	3	✓		■			
-10007R04Z3-M03	10,0	0,4	7,0	9,6	16,0	30	3	✓	■				
-10007R05Z3-E03	10,0	0,5	7,0	9,6	16,0	30	3	✓		■			
-10007R08Z3-E03	10,0	0,8	7,0	9,6	16,0	30	3	✓		■			
-10007R08Z3-M03	10,0	0,8	7,0	9,6	16,0	30	3	✓	■				
-10007R12Z3-E03	10,0	1,2	7,0	9,6	16,0	30	3	✓		■			
-10007R12Z3-M03	10,0	1,2	7,0	9,6	16,0	30	3	✓	■				
-10007R16Z3-E03	10,0	1,6	7,0	9,6	16,0	30	3	✓		■			
-10007R20Z3-E03	10,0	2,0	7,0	9,6	16,0	30	3	✓		■			
-10007R24Z3-E03	10,0	2,4	7,0	9,6	16,0	30	3	✓		■			
-10007R31Z3-E03	10,0	3,1	7,0	9,6	16,0	30	3	✓		■			
-09812KWZ3-E03	9,8	0,3	12,0	9,6	21,0	30	3	✓		■			
-10012R04Z3-E03	10	0,4	12,0	9,6	21,0	30	3	✓		■			
-10012R04Z3-M03	10	0,4	12,0	9,6	21,0	30	3	✓	■				
-10012R05Z3-E03	10	0,5	12,0	9,6	21,0	30	3	✓		■			
-10012R08Z3-E03	10	0,8	12,0	9,6	21,0	30	3	✓		■			
-10012R08Z3-M03	10	0,8	12,0	9,6	21,0	30	3	✓	■				
-10012R12Z3-E03	10	1,2	12,0	9,6	21,0	30	3	✓		■			
-10012R12Z3-M03	10	1,2	12,0	9,6	21,0	30	3	✓	■				
-10012R16Z3-E03	10	1,6	12,0	9,6	21,0	30	3	✓		■			
-10012R20Z3-E03	10	2,0	12,0	9,6	21,0	30	3	✓		■			
-10012R24Z3-E03	10	2,4	12,0	9,6	21,0	30	3	✓		■			
-10012R31Z3-E03	10	3,1	12,0	9,6	21,0	30	3	✓		■			

*Effective number of flutes

MP10 Square shoulder

Contouring only

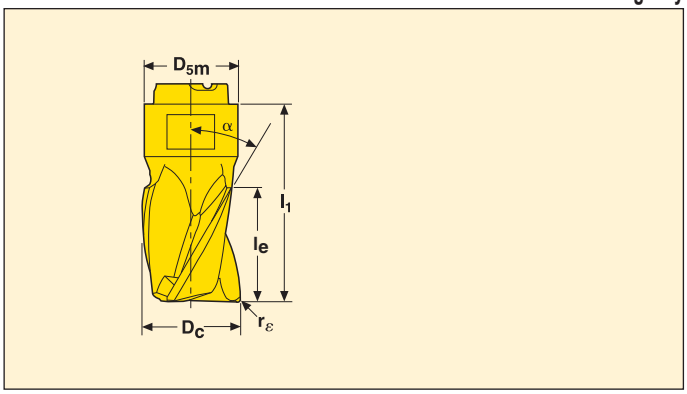

Z5

Part No.	Dimensions in mm								Coated				
									Grades				
	D_c	r_ε	l_e	D_{5m}	l_1	α°	Z_c*		MP3000	F40M			
MP10 -10012R04Z5-M02	10	0,4	12	9,6	21	40	5		■				

*Effective number of flutes

MP10 Ball nose design

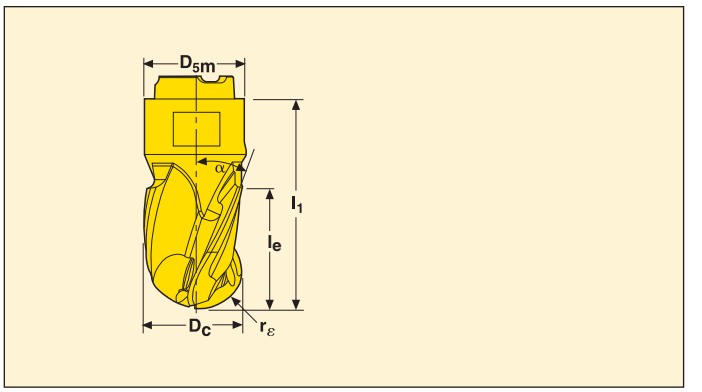

Z3

Part No.	Dimensions in mm						Zc*		Coated				
									Grades				
	Dc	rε	le	D5m	l1	α°			MP3000	F40M			
MP10 -10012B90Z3-E03	10,0	5	12,0	9,6	21,0	30	3	✓		■			
-10012B90Z3-M03	10,0	5	12,0	9,6	21,0	30	3	✓	■				
-10007B90Z3-E03	10,0	5,0	7,0	9,6	16,0	30	3	✓		■			
-10007B90Z3-M03	10,0	5,0	7,0	9,6	16,0	30	3	✓	■				

*Effective number of flutes

MP10 High feed milling – Insert selection

SMG		a_p	f_z 100%	70%	30%	20%
P1	MP10-1000.6HFZ3-MD08 MP3000	0,42	0,60	0,60	0,70	0,85
P2	MP10-1000.6HFZ3-MD08 MP3000	0,42	0,60	0,60	0,70	0,85
P3	MP10-1000.6HFZ3-MD08 MP3000	0,42	0,60	0,60	0,65	0,80
P4	MP10-1000.6HFZ3-MD08 MP3000	0,42	0,60	0,60	0,65	0,80
P5	MP10-1000.6HFZ3-MD08 MP3000	0,42	0,55	0,55	0,65	0,80
P6	MP10-1000.6HFZ3-MD08 MP3000	0,42	0,55	0,55	0,65	0,75
P7	MP10-1000.6HFZ3-MD08 MP3000	0,42	0,55	0,55	0,65	0,75
P8	MP10-1000.6HFZ3-MD08 MP3000	0,42	0,60	0,60	0,65	0,80
P11	MP10-1000.6HFZ3-MD08 MP3000	0,42	0,55	0,55	0,65	0,75
M1	MP10-1000.6HFZ3-MD08 MP3000	0,42	0,60	0,60	0,70	0,85
M2	MP10-1000.6HFZ3-MD08 MP3000	0,42	0,55	0,55	0,65	0,80
M3	MP10-1000.6HFZ3-MD08 MP3000	0,42	0,46	0,46	0,50	0,60
M4	MP10-1000.6HFZ3-MD08 MP3000	0,42	0,40	0,40	0,44	0,50
M5	MP10-1000.6HFZ3-MD08 MP3000	0,42	0,40	0,40	0,44	0,50
K1	MP10-1000.6HFZ3-MD08 MP3000	0,42	0,60	0,60	0,70	0,85
K2	MP10-1000.6HFZ3-MD08 MP3000	0,42	0,55	0,55	0,65	0,80
K3	MP10-1000.6HFZ3-MD08 MP3000	0,42	0,55	0,55	0,65	0,80
K4	MP10-1000.6HFZ3-MD08 MP3000	0,42	0,55	0,55	0,65	0,80
K5	MP10-1000.6HFZ3-MD08 MP3000	0,42	0,50	0,50	0,55	0,70
K6	MP10-1000.6HFZ3-MD08 MP3000	0,42	0,55	0,55	0,65	0,80
K7	MP10-1000.6HFZ3-MD08 MP3000	0,42	0,50	0,50	0,55	0,70
N1	MP10-1000.6HFZ3-MD08 MP3000	0,42	0,80	0,80	0,90	1,2
N2	MP10-1000.6HFZ3-MD08 MP3000	0,42	0,80	0,80	0,90	1,2
N3	MP10-1000.6HFZ3-MD08 MP3000	0,42	0,80	0,80	0,90	1,2
N11	MP10-1000.6HFZ3-MD08 MP3000	0,42	0,80	0,80	0,90	1,2
S1	MP10-1000.6HFZ3-MD08 MP3000	0,42	0,40	0,40	0,44	0,50
S2	MP10-1000.6HFZ3-MD08 MP3000	0,42	0,40	0,40	0,44	0,50
S3	MP10-1000.6HFZ3-MD08 MP3000	0,42	0,36	0,36	0,40	0,48
S11	MP10-1000.6HFZ3-MD08 MP3000	0,42	0,46	0,46	0,50	0,60
S12	MP10-1000.6HFZ3-MD08 MP3000	0,42	0,46	0,46	0,50	0,60
S13	MP10-1000.6HFZ3-MD08 MP3000	0,42	0,40	0,40	0,44	0,50
H5	MP10-1000.6HFZ3-MD08 MP3000	0,42	0,38	0,38	0,42	0,50
H8	MP10-1000.6HFZ3-MD08 MP3000	0,42	0,30	0,30	0,32	0,38
H11	MP10-1000.6HFZ3-MD08 MP3000	0,42	0,38	0,38	0,42	0,50
H12	MP10-1000.6HFZ3-MD08 MP3000	0,42	0,38	0,38	0,42	0,50
H21	MP10-1000.6HFZ3-MD08 MP3000	0,42	0,30	0,30	0,32	0,38

SMG = Seco material group
f_z = mm/tooth
v_c= m/min
a_e/D_c = %
All cutting data are start values

MP10 High feed milling – Cutting data v_c = (m/min)

SMG	MP3000			
	100%	70%	30%	20%
P1	245	300	360	375
P2	235	295	350	365
P3	205	255	305	320
P4	180	220	270	280
P5	175	215	255	270
P6	195	245	290	305
P7	185	230	270	290
P8	170	210	255	270
P11	180	225	265	280
M1	175	220	260	275
M2	145	180	215	225
M3	115	145	175	185
M4	90	110	135	140
M5	75	95	110	120
K1	185	235	275	290
K2	165	205	245	255
K3	140	175	205	215
K4	135	165	195	205
K5	80	100	120	125
K6	120	145	175	180
K7	105	130	155	160
N1	690	860	1025	1050
N2	560	690	830	860
N3	370	460	550	570
N11	425	530	630	650
S1	42	50	60	65
S2	34	42	50	55
S3	30	37	44	46
S11	60	75	85	90
S12	34	42	50	55
S13	27	34	40	43
H5	36	45	55	55
H8	38	47	55	60
H11	46	55	70	70
H12	70	85	100	110
H21	38	47	55	60

MP10 Slot milling – Insert selection

SMG		a_p	f_z 100%	f_z 30%	f_z 10%	f_z 5%
P1	MP10-10007R04Z3-M03 MP3000	3,0	0,042	0,046	0,070	0,10
P2	MP10-10007R04Z3-M03 MP3000	3,0	0,044	0,048	0,075	0,10
P3	MP10-10007R04Z3-M03 MP3000	3,0	0,040	0,044	0,070	0,095
P4	MP10-10007R04Z3-M03 MP3000	3,0	0,040	0,044	0,065	0,095
P5	MP10-10007R04Z3-M03 MP3000	3,0	0,040	0,042	0,065	0,090
P6	MP10-10007R04Z3-M03 MP3000	3,0	0,038	0,042	0,065	0,090
P7	MP10-10007R04Z3-M03 MP3000	3,0	0,038	0,042	0,065	0,090
P8	MP10-10007R04Z3-M03 MP3000	3,0	0,040	0,044	0,070	0,095
P11	MP10-10007R04Z3-M03 MP3000	3,0	0,038	0,042	0,065	0,090
M1	MP10-10007R04Z3-E03 F40M	3,0	0,044	0,048	0,075	0,10
M2	MP10-10007R04Z3-E03 F40M	3,0	0,040	0,042	0,065	0,090
M3	MP10-10007R04Z3-E03 F40M	2,5	0,032	0,034	0,055	0,075
M4	MP10-10007R04Z3-E03 F40M	1,7	0,028	0,030	0,046	0,065
M5	MP10-10007R04Z3-E03 F40M	1,7	0,028	0,030	0,046	0,065
K1	MP10-10007R04Z3-M03 MP3000	3,0	0,044	0,048	0,075	0,10
K2	MP10-10007R04Z3-M03 MP3000	3,0	0,040	0,042	0,065	0,090
K3	MP10-10007R04Z3-M03 MP3000	3,0	0,040	0,042	0,065	0,090
K4	MP10-10007R04Z3-M03 MP3000	3,0	0,040	0,042	0,065	0,090
K5	MP10-10007R04Z3-M03 MP3000	3,0	0,036	0,038	0,060	0,085
K6	MP10-10007R04Z3-M03 MP3000	3,0	0,040	0,042	0,065	0,090
K7	MP10-10007R04Z3-M03 MP3000	3,0	0,036	0,038	0,060	0,085
N1	MP10-10007R04Z3-E03 F40M	3,0	0,055	0,060	0,095	0,13
N2	MP10-10007R04Z3-E03 F40M	3,0	0,055	0,060	0,095	0,13
N3	MP10-10007R04Z3-E03 F40M	3,0	0,055	0,060	0,095	0,13
N11	MP10-10007R04Z3-E03 F40M	3,0	0,055	0,060	0,095	0,13
S1	MP10-10007R04Z3-E03 F40M	1,7	0,028	0,030	0,046	0,065
S2	MP10-10007R04Z3-E03 F40M	1,7	0,028	0,030	0,046	0,065
S3	MP10-10007R04Z3-E03 F40M	1,7	0,026	0,028	0,044	0,060
S11	MP10-10007R04Z3-E03 F40M	2,0	0,032	0,034	0,055	0,075
S12	MP10-10007R04Z3-E03 F40M	2,0	0,032	0,034	0,055	0,075
S13	MP10-10007R04Z3-E03 F40M	1,7	0,028	0,030	0,046	0,065
H5	MP10-10007R04Z3-M03 MP3000	2,5	0,026	0,030	0,044	0,060
H8	MP10-10007R04Z3-M03 MP3000	2,0	0,020	0,022	0,034	0,048
H11	MP10-10007R04Z3-M03 MP3000	2,5	0,026	0,030	0,044	0,060
H12	MP10-10007R04Z3-M03 MP3000	2,5	0,026	0,030	0,044	0,060
H21	MP10-10007R04Z3-M03 MP3000	2,0	0,020	0,022	0,034	0,048

SMG = Seco material group
f_z = mm/tooth
v_c= m/min
a_e/D_c = %
All cutting data are start values

MP10 Slot milling – Cutting data v_c = (m/min)

SMG	MP3000				F40M			
	100%	30%	10%	5%	100%	30%	10%	5%
P1	265	350	410	445	250	330	385	420
P2	260	340	400	435	245	320	375	410
P3	225	295	345	375	215	280	325	355
P4	200	260	305	330	185	245	290	315
P5	190	250	290	320	180	235	275	300
P6	215	280	330	360	205	265	310	340
P7	205	265	310	340	190	250	290	320
P8	190	250	290	315	180	235	275	300
P11	195	260	300	330	185	245	285	310
M1	195	255	300	325	200	255	305	330
M2	160	210	245	265	160	215	250	270
M3	125	165	195	210	130	170	195	215
M4	95	125	145	160	100	130	150	165
M5	80	105	125	135	80	110	125	135
K1	205	270	315	345	195	255	300	325
K2	180	235	275	305	170	225	260	285
K3	150	200	235	255	145	190	220	245
K4	145	190	225	245	135	180	210	230
K5	90	115	135	150	85	110	130	140
K6	130	170	195	215	120	160	185	205
K7	115	150	175	190	105	140	165	180
N1	770	1025	1200	1300	730	960	1125	1225
N2	620	820	960	1050	590	770	910	990
N3	415	550	640	700	390	520	610	660
N11	475	620	730	800	450	590	690	750
S1	45	60	70	75	46	60	70	75
S2	36	48	55	60	37	49	55	60
S3	32	41	48	55	32	42	49	55
S11	65	85	100	105	65	85	100	110
S12	37	48	55	60	37	49	60	60
S13	29	38	44	48	29	39	45	49
H5	38	50	60	65	38	50	60	65
H8	40	50	60	65	40	50	60	65
H11	49	65	75	80	49	65	75	80
H12	80	100	120	130	80	105	120	135
H21	40	50	60	65	40	50	60	65

MP10 Copy milling – Insert selection

SMG		a_p	f_z 100%	30%	10%	5%	2%
P1	MP10-10007B90Z3-M03 MP3000	3,0	0,060	0,065	0,10	0,14	0,24
P2	MP10-10007B90Z3-M03 MP3000	3,0	0,060	0,065	0,10	0,14	0,24
P3	MP10-10007B90Z3-M03 MP3000	3,0	0,055	0,065	0,095	0,14	0,22
P4	MP10-10007B90Z3-M03 MP3000	3,0	0,055	0,060	0,095	0,13	0,22
P5	MP10-10007B90Z3-M03 MP3000	3,0	0,055	0,060	0,095	0,13	0,22
P6	MP10-10007B90Z3-M03 MP3000	3,0	0,055	0,060	0,090	0,13	0,20
P7	MP10-10007B90Z3-M03 MP3000	3,0	0,055	0,060	0,090	0,13	0,20
P8	MP10-10007B90Z3-M03 MP3000	3,0	0,055	0,065	0,095	0,14	0,22
P11	MP10-10007B90Z3-M03 MP3000	3,0	0,055	0,060	0,090	0,13	0,20
M1	MP10-10007B90Z3-E03 F40M	3,0	0,060	0,065	0,10	0,14	0,24
M2	MP10-10007B90Z3-E03 F40M	3,0	0,055	0,060	0,095	0,13	0,22
M3	MP10-10007B90Z3-E03 F40M	2,5	0,044	0,048	0,075	0,10	0,17
M4	MP10-10007B90Z3-E03 F40M	1,7	0,038	0,042	0,065	0,090	0,14
M5	MP10-10007B90Z3-E03 F40M	1,7	0,038	0,042	0,065	0,090	0,14
K1	MP10-10007B90Z3-M03 MP3000	3,0	0,060	0,065	0,10	0,14	0,24
K2	MP10-10007B90Z3-M03 MP3000	3,0	0,055	0,060	0,095	0,13	0,22
K3	MP10-10007B90Z3-M03 MP3000	3,0	0,055	0,060	0,095	0,13	0,22
K4	MP10-10007B90Z3-M03 MP3000	3,0	0,055	0,060	0,095	0,13	0,22
K5	MP10-10007B90Z3-M03 MP3000	3,0	0,050	0,055	0,085	0,12	0,19
K6	MP10-10007B90Z3-M03 MP3000	3,0	0,055	0,060	0,095	0,13	0,22
K7	MP10-10007B90Z3-M03 MP3000	3,0	0,050	0,055	0,085	0,12	0,19
N1	MP10-10007B90Z3-E03 F40M	3,0	0,075	0,085	0,13	0,18	0,30
N2	MP10-10007B90Z3-E03 F40M	3,0	0,075	0,085	0,13	0,18	0,30
N3	MP10-10007B90Z3-E03 F40M	3,0	0,075	0,085	0,13	0,18	0,30
N11	MP10-10007B90Z3-E03 F40M	3,0	0,075	0,085	0,13	0,18	0,30
S1	MP10-10007B90Z3-E03 F40M	1,7	0,038	0,042	0,065	0,090	0,14
S2	MP10-10007B90Z3-E03 F40M	1,7	0,038	0,042	0,065	0,090	0,14
S3	MP10-10007B90Z3-E03 F40M	1,7	0,036	0,040	0,060	0,085	0,13
S11	MP10-10007B90Z3-E03 F40M	2,0	0,044	0,048	0,075	0,10	0,17
S12	MP10-10007B90Z3-E03 F40M	2,0	0,044	0,048	0,075	0,10	0,17
S13	MP10-10007B90Z3-E03 F40M	1,7	0,038	0,042	0,065	0,090	0,14
H5	MP10-10007B90Z3-M03 MP3000	2,5	0,038	0,040	0,065	0,085	0,14
H8	MP10-10007B90Z3-M03 MP3000	2,0	0,028	0,032	0,048	0,065	0,11
H11	MP10-10007B90Z3-M03 MP3000	2,5	0,038	0,040	0,065	0,085	0,14
H12	MP10-10007B90Z3-M03 MP3000	2,5	0,038	0,040	0,065	0,085	0,14
H21	MP10-10007B90Z3-M03 MP3000	2,0	0,028	0,032	0,048	0,065	0,11

SMG = Seco material group
f_z = mm/tooth
v_c= m/min
a_e/D_c = %
All cutting data are start values

MP10 Copy milling – Cutting data v_c = (m/min)

	MP3000					F40M				
SMG	100%	30%	10%	5%	2%	100%	30%	10%	5%	2%
P1	360	415	485	530	590	340	395	460	500	560
P2	350	405	470	520	570	330	385	440	485	540
P3	305	350	405	445	500	290	330	385	420	470
P4	270	310	360	395	440	255	295	340	375	415
P5	255	295	345	380	420	245	280	325	360	400
P6	290	335	390	425	475	270	315	365	400	450
P7	270	315	365	400	450	255	295	345	380	425
P8	255	295	340	375	420	245	275	325	350	395
P11	265	305	355	390	435	250	290	335	370	410
M1	265	305	350	385	430	265	310	355	395	435
M2	215	250	290	315	355	220	250	295	320	360
M3	170	200	225	250	280	175	205	230	255	285
M4	135	155	175	190	215	135	160	180	195	220
M5	110	130	145	160	180	115	130	150	160	180
K1	280	320	370	410	455	265	305	350	385	430
K2	245	280	330	360	400	230	265	310	340	380
K3	205	240	275	305	340	195	225	260	285	320
K4	195	230	265	290	325	185	215	250	275	305
K5	120	135	160	175	195	110	130	150	165	185
K6	175	200	235	255	285	165	190	220	240	270
K7	150	175	205	225	250	145	165	195	210	240
N1	1075	1200	1400	1525	1700	1000	1150	1325	1450	1625
N2	860	970	1150	1225	1375	810	920	1075	1175	1300
N3	570	650	760	820	920	540	610	720	780	870
N11	650	740	870	940	1050	620	700	820	890	990
S1	60	75	80	90	100	65	75	85	90	100
S2	50	60	65	70	80	50	60	65	75	80
S3	43	50	55	65	70	44	50	60	65	70
S11	85	105	115	125	140	90	105	115	130	145
S12	50	60	65	75	80	50	60	65	75	85
S13	40	47	55	55	65	41	48	55	60	65
H5	50	60	70	75	85	50	60	70	75	85
H8	55	65	70	80	90	55	65	70	80	90
H11	65	80	90	95	110	65	80	90	95	110
H12	100	115	135	145	165	100	120	135	145	165
H21	55	65	70	80	90	55	65	70	80	90

MP12 Shanks

Design 1

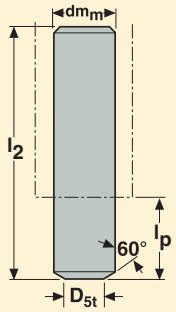

Design 2

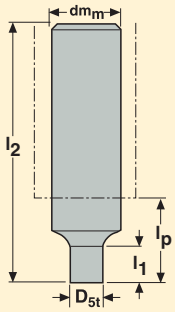

Design 3

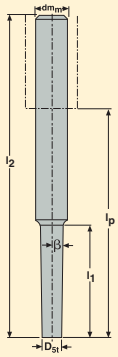

Design 4

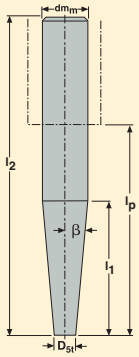

- Cylindrical shank dm_m with tolerance h5, compatible for Shrinkfit.
- Max RPM 72700 r/min

Part No.	Connecting size	Dimensions in mm D_{5t}	dm_m	l_2	l_p	l_1	β°	Design		KG
MP12 -12060-012.00	MP12	11,5	12	60	15	12	0	2	✓	0,1
-16068-000.60	MP12	11,5	16	68	20	0	60	1	✓	0,1
-16078-018.00	MP12	11,5	16	78	30	18	0	2	✓	0,1
-16153-042.01	MP12	11,5	16	153	105	42	1	3	✓	0,2
-20170-072.01	MP12	11,5	20	170	120	72	1	3	✓	0,3
-20110-055.03	MP12	11,5	20	110	60	55	3	3	✓	0,2
-20150-100.03	MP12	11,5	20	150	100	81,1	3	4	✓	0,3
-20155-105.05	MP12	11,5	20	155	105	48,6	5	4	✓	0,4
MP12 -16107-036.00-E	MP12	11,5	16	107	59	36	0	2	✓	0,3
-16120-048.00-E	MP12	11,5	16	120	72	48	0	2	✓	0,3
-16150-072.00-E	MP12	11,5	16	150	102	72	0	2	✓	0,3
-16120-060.01-E	MP12	11,5	16	120	72	60	1	3	✓	0,3
-16150-096.01-E	MP12	11,5	16	150	102	96	1	3	✓	0,4
-16175-120.01-E	MP12	11,5	16	175	127	120	1	3	✓	0,4
-16155-107.03-E	MP12	11,5	16	155	107	42,9	3	4	✓	0,4
-16180-132.03-E	MP12	11,5	16	180	132	42,9	3	4	✓	0,5

Accessories

Inserts	Torque key	Replacement blade	Key
MP12	MP00-12.150	MP00-12M	MP1016

Blades are included with the torque key

MP12 High feed

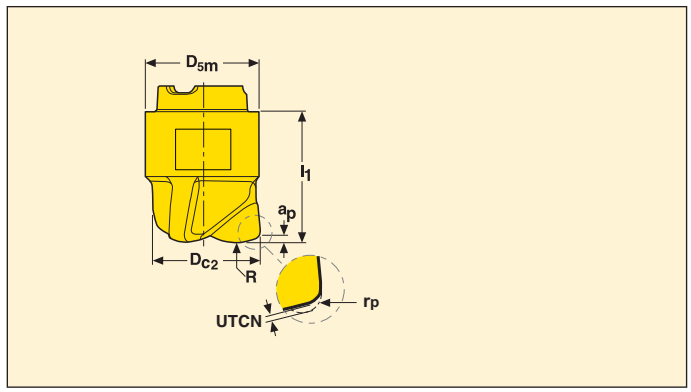

Z3

Part No.	Dimensions in mm							Z_c*		Coated				
										Grades				
	a_p	D_{c2}	R	r_p	D_{5m}	l_1	UTCN			MP3000	F40M			
MP12 -1200.7HFZ3-MD10	0,7	12	7,5	1,66	11,5	13,0	0,33	3	✓	■				

*Effective number of flutes

UTCN = Uncut thickness, deviation between programmed corner radii (r_p) and generated machined profile.

MP12 Square shoulder

Slotting and contouring

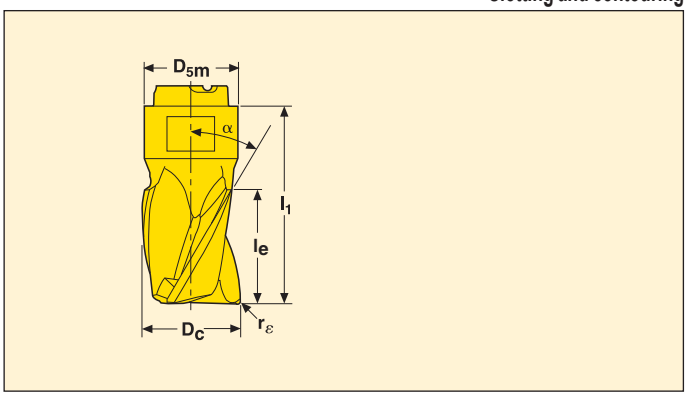

Z3

Part No.	Dimensions in mm								Coated				
									Grades				
	D_c	r_ε	l_e	D_{5m}	l_1	α°	Z_c*		MP3000	F40M			
MP12 -11714KWZ3-E04	11,7	0,3	14,0	11,5	24,0	30	3	✓		■			
-12014R04Z3-E04	12	0,4	14,0	11,5	24,0	30	3	✓		■			
-12014R04Z3-M04	12	0,4	14,0	11,5	24,0	30	3	✓	■				
-12014R05Z3-E04	12	0,5	14,0	11,5	24,0	30	3	✓		■			
-12014R08Z3-E04	12	0,8	14,0	11,5	24,0	30	3	✓		■			
-12014R08Z3-M04	12	0,8	14,0	11,5	24,0	30	3	✓	■				
-12014R12Z3-E04	12	1,2	14,0	11,5	24,0	30	3	✓		■			
-12014R12Z3-M04	12	1,2	14,0	11,5	24,0	30	3	✓	■				
-12014R16Z3-E04	12	1,6	14,0	11,5	24,0	30	3	✓		■			
-12014R20Z3-E04	12	2,0	14,0	11,5	24,0	30	3	✓		■			
-12014R24Z3-E04	12	2,4	14,0	11,5	24,0	30	3	✓		■			
-12014R31Z3-E04	12	3,1	14,0	11,5	24,0	30	3	✓		■			
MP12 -11708KWZ3-E04	11,7	0,3	8,0	11,5	18,8	30	3	✓		■			
-12008R04Z3-E04	12,0	0,4	8,0	11,5	18,8	30	3	✓		■			
-12008R04Z3-M04	12,0	0,4	8,0	11,5	18,8	30	3	✓	■				
-12008R05Z3-E04	12,0	0,5	8,0	11,5	18,8	30	3	✓		■			
-12008R08Z3-E04	12,0	0,8	8,0	11,5	18,8	30	3	✓		■			
-12008R08Z3-M04	12,0	0,8	8,0	11,5	18,8	30	3	✓	■				
-12008R12Z3-E04	12,0	1,2	8,0	11,5	18,8	30	3	✓		■			
-12008R12Z3-M04	12,0	1,2	8,0	11,5	18,8	30	3	✓	■				
-12008R16Z3-E04	12,0	1,6	8,0	11,5	18,8	30	3	✓		■			
-12008R20Z3-E04	12,0	2,0	8,0	11,5	18,8	30	3	✓		■			
-12008R24Z3-E04	12,0	2,4	8,0	11,5	18,8	30	3	✓		■			
-12008R31Z3-E04	12,0	3,1	8,0	11,5	18,8	30	3	✓		■			

*Effective number of flutes

MP12 Square shoulder

Contouring only

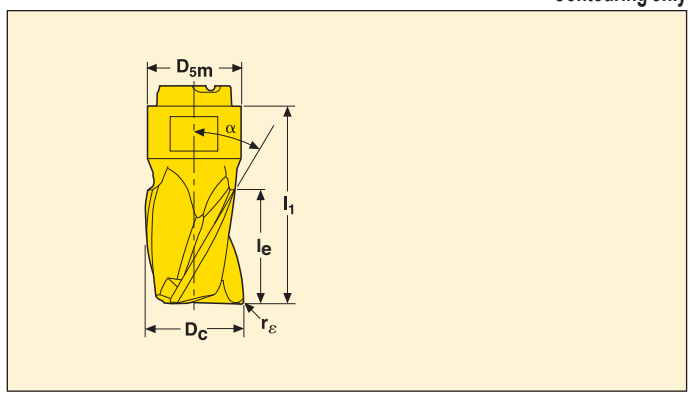

Z6

Part No.	Dimensions in mm						Zc*		Coated				
									Grades				
	Dc	rε	le	D5m	l1	α°			MP3000	F40M			
MP12 -12014R04Z6-M03	12	0,4	14	11,5	24	40	6		■				

*Effective number of flutes

MP12 Ball nose design

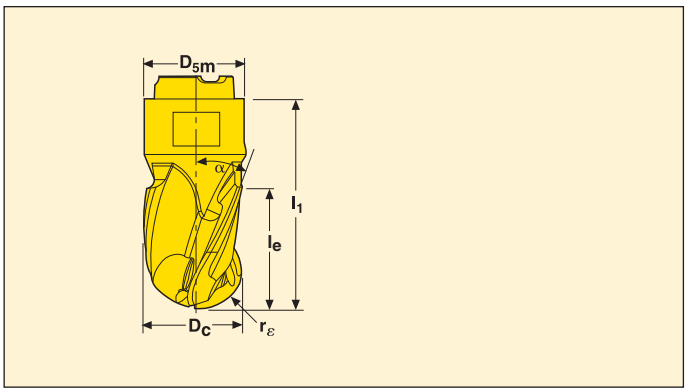

Z3

Part No.	Dimensions in mm						Zc*		Coated				
									Grades				
	Dc	rε	le	D5m	l1	α°			MP3000	F40M			
MP12 -12008B90Z3-E04	12,0	6,0	8,0	11,5	18,8	30	3	✓		■			
-12008B90Z3-M04	12,0	6,0	8,0	11,5	18,8	30	3	✓	■				
-12014B90Z3-E04	12,0	6	14,0	11,5	24,0	30	3	✓		■			
-12014B90Z3-M04	12,0	6	14,0	11,5	24,0	30	3	✓	■				

*Effective number of flutes

MP12 High feed milling – Insert selection

SMG		a_p	f_z			
			100%	70%	30%	20%
P1	MP12-1200.7HFZ3-MD10 MP3000	0,48	0,80	0,80	0,90	1,1
P2	MP12-1200.7HFZ3-MD10 MP3000	0,48	0,80	0,80	0,90	1,1
P3	MP12-1200.7HFZ3-MD10 MP3000	0,48	0,75	0,75	0,85	1,1
P4	MP12-1200.7HFZ3-MD10 MP3000	0,48	0,75	0,75	0,85	1,0
P5	MP12-1200.7HFZ3-MD10 MP3000	0,48	0,75	0,75	0,80	1,0
P6	MP12-1200.7HFZ3-MD10 MP3000	0,48	0,70	0,70	0,80	1,0
P7	MP12-1200.7HFZ3-MD10 MP3000	0,48	0,70	0,70	0,80	1,0
P8	MP12-1200.7HFZ3-MD10 MP3000	0,48	0,75	0,75	0,85	1,1
P11	MP12-1200.7HFZ3-MD10 MP3000	0,48	0,70	0,70	0,80	1,0
M1	MP12-1200.7HFZ3-MD10 MP3000	0,48	0,80	0,80	0,90	1,1
M2	MP12-1200.7HFZ3-MD10 MP3000	0,48	0,75	0,75	0,80	1,0
M3	MP12-1200.7HFZ3-MD10 MP3000	0,48	0,60	0,60	0,65	0,80
M4	MP12-1200.7HFZ3-MD10 MP3000	0,48	0,50	0,50	0,55	0,70
M5	MP12-1200.7HFZ3-MD10 MP3000	0,48	0,50	0,50	0,55	0,70
K1	MP12-1200.7HFZ3-MD10 MP3000	0,48	0,80	0,80	0,90	1,1
K2	MP12-1200.7HFZ3-MD10 MP3000	0,48	0,75	0,75	0,80	1,0
K3	MP12-1200.7HFZ3-MD10 MP3000	0,48	0,75	0,75	0,80	1,0
K4	MP12-1200.7HFZ3-MD10 MP3000	0,48	0,75	0,75	0,80	1,0
K5	MP12-1200.7HFZ3-MD10 MP3000	0,48	0,65	0,65	0,75	0,90
K6	MP12-1200.7HFZ3-MD10 MP3000	0,48	0,75	0,75	0,80	1,0
K7	MP12-1200.7HFZ3-MD10 MP3000	0,48	0,65	0,65	0,75	0,90
N1	MP12-1200.7HFZ3-MD10 MP3000	0,48	1,0	1,0	1,2	1,6
N2	MP12-1200.7HFZ3-MD10 MP3000	0,48	1,0	1,0	1,2	1,6
N3	MP12-1200.7HFZ3-MD10 MP3000	0,48	1,0	1,0	1,2	1,6
N11	MP12-1200.7HFZ3-MD10 MP3000	0,48	1,0	1,0	1,2	1,6
S1	MP12-1200.7HFZ3-MD10 MP3000	0,48	0,50	0,50	0,55	0,70
S2	MP12-1200.7HFZ3-MD10 MP3000	0,48	0,50	0,50	0,55	0,70
S3	MP12-1200.7HFZ3-MD10 MP3000	0,48	0,48	0,48	0,50	0,65
S11	MP12-1200.7HFZ3-MD10 MP3000	0,48	0,60	0,60	0,65	0,80
S12	MP12-1200.7HFZ3-MD10 MP3000	0,48	0,60	0,60	0,65	0,80
S13	MP12-1200.7HFZ3-MD10 MP3000	0,48	0,50	0,50	0,55	0,70
H5	MP12-1200.7HFZ3-MD10 MP3000	0,48	0,50	0,50	0,55	0,65
H8	MP12-1200.7HFZ3-MD10 MP3000	0,48	0,38	0,38	0,42	0,50
H11	MP12-1200.7HFZ3-MD10 MP3000	0,48	0,50	0,50	0,55	0,65
H12	MP12-1200.7HFZ3-MD10 MP3000	0,48	0,50	0,50	0,55	0,65
H21	MP12-1200.7HFZ3-MD10 MP3000	0,48	0,38	0,38	0,42	0,50

SMG = Seco material group
f_z = mm/tooth
v_c= m/min
a_e/D_c = %
All cutting data are start values

MP12 High feed milling – Cutting data v_c = (m/min)

SMG	MP3000			
	100%	70%	30%	20%
P1	225	280	335	355
P2	220	275	330	345
P3	195	240	285	295
P4	170	210	250	270
P5	160	200	245	255
P6	185	230	275	285
P7	175	215	260	270
P8	160	200	240	250
P11	170	210	250	265
M1	165	205	245	260
M2	135	170	205	215
M3	110	135	165	170
M4	85	105	125	135
M5	70	90	105	110
K1	175	215	260	275
K2	155	190	230	245
K3	130	160	195	205
K4	125	155	185	195
K5	75	95	115	120
K6	110	135	165	175
K7	100	120	145	155
N1	650	810	960	980
N2	520	650	770	790
N3	350	435	510	530
N11	400	495	590	610
S1	40	50	60	60
S2	32	40	48	50
S3	28	35	42	44
S11	55	70	85	85
S12	32	39	48	50
S13	26	32	38	40
H5	34	42	50	55
H8	36	45	55	55
H11	43	55	65	70
H12	65	80	95	105
H21	36	45	55	55

MP12 Slot milling – Insert selection

SMG		a_p	f_z			
			100%	30%	10%	5%
P1	MP12-12008R04Z3-M04 MP3000	3,5	0,055	0,060	0,095	0,13
P2	MP12-12008R04Z3-M04 MP3000	3,5	0,060	0,065	0,095	0,13
P3	MP12-12008R04Z3-M04 MP3000	3,5	0,055	0,060	0,090	0,13
P4	MP12-12008R04Z3-M04 MP3000	3,5	0,055	0,060	0,090	0,12
P5	MP12-12008R04Z3-M04 MP3000	3,5	0,050	0,055	0,090	0,12
P6	MP12-12008R04Z3-M04 MP3000	3,5	0,050	0,055	0,085	0,12
P7	MP12-12008R04Z3-M04 MP3000	3,5	0,050	0,055	0,085	0,12
P8	MP12-12008R04Z3-M04 MP3000	3,5	0,055	0,060	0,090	0,13
P11	MP12-12008R04Z3-M04 MP3000	3,5	0,050	0,055	0,085	0,12
M1	MP12-12008R04Z3-E04 F40M	3,5	0,060	0,065	0,095	0,13
M2	MP12-12008R04Z3-E04 F40M	3,5	0,050	0,055	0,090	0,12
M3	MP12-12008R04Z3-E04 F40M	2,5	0,042	0,046	0,070	0,10
M4	MP12-12008R04Z3-E04 F40M	2,0	0,038	0,040	0,060	0,085
M5	MP12-12008R04Z3-E04 F40M	2,0	0,038	0,040	0,060	0,085
K1	MP12-12008R04Z3-M04 MP3000	3,5	0,060	0,065	0,095	0,13
K2	MP12-12008R04Z3-M04 MP3000	3,5	0,050	0,055	0,090	0,12
K3	MP12-12008R04Z3-M04 MP3000	3,5	0,050	0,055	0,090	0,12
K4	MP12-12008R04Z3-M04 MP3000	3,5	0,050	0,055	0,090	0,12
K5	MP12-12008R04Z3-M04 MP3000	3,5	0,048	0,050	0,080	0,11
K6	MP12-12008R04Z3-M04 MP3000	3,5	0,050	0,055	0,090	0,12
K7	MP12-12008R04Z3-M04 MP3000	3,5	0,048	0,050	0,080	0,11
N1	MP12-12008R04Z3-E04 F40M	3,5	0,075	0,080	0,12	0,17
N2	MP12-12008R04Z3-E04 F40M	3,5	0,075	0,080	0,12	0,17
N3	MP12-12008R04Z3-E04 F40M	3,5	0,075	0,080	0,12	0,17
N11	MP12-12008R04Z3-E04 F40M	3,5	0,075	0,080	0,12	0,17
S1	MP12-12008R04Z3-E04 F40M	2,0	0,038	0,040	0,060	0,085
S2	MP12-12008R04Z3-E04 F40M	2,0	0,038	0,040	0,060	0,085
S3	MP12-12008R04Z3-E04 F40M	2,0	0,034	0,038	0,060	0,080
S11	MP12-12008R04Z3-E04 F40M	2,5	0,042	0,046	0,070	0,10
S12	MP12-12008R04Z3-E04 F40M	2,5	0,042	0,046	0,070	0,10
S13	MP12-12008R04Z3-E04 F40M	2,0	0,038	0,040	0,060	0,085
H5	MP12-12008R04Z3-M04 MP3000	2,5	0,036	0,040	0,060	0,085
H8	MP12-12008R04Z3-M04 MP3000	2,5	0,028	0,030	0,046	0,065
H11	MP12-12008R04Z3-M04 MP3000	2,5	0,036	0,040	0,060	0,085
H12	MP12-12008R04Z3-M04 MP3000	2,5	0,036	0,040	0,060	0,085
H21	MP12-12008R04Z3-M04 MP3000	2,5	0,028	0,030	0,046	0,065

SMG = Seco material group
f_z = mm/tooth
v_c= m/min
a_e/D_c = %
All cutting data are start values

MP12 Slot milling – Cutting data v_c = (m/min)

SMG	MP3000				F40M			
	100%	30%	10%	5%	100%	30%	10%	5%
P1	255	330	385	425	240	315	365	400
P2	245	315	375	410	235	300	355	390
P3	210	275	325	355	200	260	310	335
P4	185	245	290	315	175	230	270	300
P5	180	235	280	305	170	225	260	285
P6	205	265	310	340	195	250	295	320
P7	195	250	295	320	180	235	280	305
P8	180	235	275	300	170	220	260	280
P11	185	245	285	310	175	230	270	295
M1	185	235	280	310	190	240	285	315
M2	150	200	230	255	155	200	235	255
M3	120	155	185	200	125	160	185	205
M4	95	120	140	155	95	125	145	155
M5	80	100	115	130	80	100	120	130
K1	195	250	295	325	185	235	280	310
K2	175	225	265	290	165	215	250	270
K3	145	190	225	245	140	180	210	230
K4	140	180	215	230	130	170	200	220
K5	85	110	130	140	80	105	120	135
K6	125	160	185	205	115	150	175	195
K7	105	140	165	180	100	135	155	170
N1	720	950	1125	1225	680	900	1050	1150
N2	580	770	900	990	550	720	850	930
N3	390	510	600	660	365	485	570	620
N11	445	580	690	750	420	550	650	710
S1	43	55	65	70	44	55	65	75
S2	35	45	55	60	36	46	55	60
S3	30	39	46	50	31	40	47	50
S11	60	80	95	100	60	80	95	105
S12	35	46	55	60	36	47	55	60
S13	28	36	42	46	29	37	43	47
H5	37	48	55	60	37	48	55	60
H8	38	50	60	65	39	50	60	65
H11	47	60	70	80	47	60	70	80
H12	70	90	105	120	70	95	110	120
H21	38	50	60	65	39	50	60	65

MP12 Copy milling – Insert selection

SMG		a_p	f_z 100%	30%	10%	5%	2%
P1	MP12-12008R04Z3-M04 MP3000	3,5	0,055	0,060	0,095	0,13	0,22
P2	MP12-12008R04Z3-M04 MP3000	3,5	0,060	0,065	0,095	0,13	0,22
P3	MP12-12008R04Z3-M04 MP3000	3,5	0,055	0,060	0,090	0,13	0,20
P4	MP12-12008R04Z3-M04 MP3000	3,5	0,055	0,060	0,090	0,12	0,20
P5	MP12-12008R04Z3-M04 MP3000	3,5	0,050	0,055	0,090	0,12	0,20
P6	MP12-12008R04Z3-M04 MP3000	3,5	0,050	0,055	0,085	0,12	0,20
P7	MP12-12008R04Z3-M04 MP3000	3,5	0,050	0,055	0,085	0,12	0,20
P8	MP12-12008R04Z3-M04 MP3000	3,5	0,055	0,060	0,090	0,13	0,20
P11	MP12-12008R04Z3-M04 MP3000	3,5	0,050	0,055	0,085	0,12	0,20
M1	MP12-12008R04Z3-E04 F40M	3,5	0,060	0,065	0,095	0,13	0,22
M2	MP12-12008R04Z3-E04 F40M	3,5	0,050	0,055	0,090	0,12	0,20
M3	MP12-12008R04Z3-E04 F40M	2,5	0,042	0,046	0,070	0,10	0,16
M4	MP12-12008R04Z3-E04 F40M	2,0	0,038	0,040	0,060	0,085	0,14
M5	MP12-12008R04Z3-E04 F40M	2,0	0,038	0,040	0,060	0,085	0,14
K1	MP12-12008R04Z3-M04 MP3000	3,5	0,060	0,065	0,095	0,13	0,22
K2	MP12-12008R04Z3-M04 MP3000	3,5	0,050	0,055	0,090	0,12	0,20
K3	MP12-12008R04Z3-M04 MP3000	3,5	0,050	0,055	0,090	0,12	0,20
K4	MP12-12008R04Z3-M04 MP3000	3,5	0,050	0,055	0,090	0,12	0,20
K5	MP12-12008R04Z3-M04 MP3000	3,5	0,048	0,050	0,080	0,11	0,18
K6	MP12-12008R04Z3-M04 MP3000	3,5	0,050	0,055	0,090	0,12	0,20
K7	MP12-12008R04Z3-M04 MP3000	3,5	0,048	0,050	0,080	0,11	0,18
N1	MP12-12008R04Z3-E04 F40M	3,5	0,075	0,080	0,12	0,17	0,28
N2	MP12-12008R04Z3-E04 F40M	3,5	0,075	0,080	0,12	0,17	0,28
N3	MP12-12008R04Z3-E04 F40M	3,5	0,075	0,080	0,12	0,17	0,28
N11	MP12-12008R04Z3-E04 F40M	3,5	0,075	0,080	0,12	0,17	0,28
S1	MP12-12008R04Z3-E04 F40M	2,0	0,038	0,040	0,060	0,085	0,14
S2	MP12-12008R04Z3-E04 F40M	2,0	0,038	0,040	0,060	0,085	0,14
S3	MP12-12008R04Z3-E04 F40M	2,0	0,034	0,038	0,060	0,080	0,13
S11	MP12-12008R04Z3-E04 F40M	2,5	0,042	0,046	0,070	0,10	0,16
S12	MP12-12008R04Z3-E04 F40M	2,5	0,042	0,046	0,070	0,10	0,16
S13	MP12-12008R04Z3-E04 F40M	2,0	0,038	0,040	0,060	0,085	0,14
H5	MP12-12008R04Z3-M04 MP3000	2,5	0,036	0,040	0,060	0,085	0,13
H8	MP12-12008R04Z3-M04 MP3000	2,5	0,028	0,030	0,046	0,065	0,10
H11	MP12-12008R04Z3-M04 MP3000	2,5	0,036	0,040	0,060	0,085	0,13
H12	MP12-12008R04Z3-M04 MP3000	2,5	0,036	0,040	0,060	0,085	0,13
H21	MP12-12008R04Z3-M04 MP3000	2,5	0,028	0,030	0,046	0,065	0,10

SMG = Seco material group
f_z = mm/tooth
v_c= m/min
a_e/D_c = %
All cutting data are start values

MP12 Copy milling – Cutting data v_c = (m/min)

SMG	MP3000					F40M				
	100%	30%	10%	5%	2%	100%	30%	10%	5%	2%
P1	340	400	455	495	550	320	380	430	470	520
P2	330	385	445	485	540	310	365	420	455	510
P3	285	335	390	420	470	270	315	365	400	445
P4	255	300	340	370	415	240	280	325	350	390
P5	240	285	325	360	400	230	270	310	340	380
P6	270	320	365	405	450	255	305	345	380	425
P7	255	300	345	380	425	240	285	325	360	400
P8	240	280	325	355	395	230	265	310	335	375
P11	250	295	335	370	415	235	280	320	350	390
M1	245	290	330	360	405	250	295	340	370	410
M2	200	240	275	300	335	205	245	280	305	340
M3	165	190	220	240	265	170	195	220	240	270
M4	130	150	165	180	205	130	155	170	185	210
M5	110	125	140	150	170	110	130	140	155	175
K1	260	305	350	385	425	245	290	330	360	405
K2	230	270	310	340	380	215	255	295	320	360
K3	195	230	260	290	325	185	215	250	270	305
K4	185	220	250	275	310	175	205	235	260	290
K5	115	135	150	165	185	105	125	145	155	175
K6	165	195	220	240	270	155	180	210	230	255
K7	145	170	195	210	240	135	160	185	200	225
N1	990	1150	1325	1425	1600	940	1100	1250	1350	1500
N2	800	940	1075	1150	1300	760	890	1000	1100	1225
N3	530	620	710	770	860	500	590	670	730	810
N11	610	710	820	880	980	580	670	770	830	930
S1	60	70	80	85	95	60	70	80	85	95
S2	49	55	65	70	75	49	60	65	70	80
S3	42	50	55	60	65	43	50	55	60	70
S11	85	100	110	120	135	85	100	110	120	135
S12	49	55	65	70	75	50	60	65	70	80
S13	39	46	50	55	60	40	47	50	55	65
H5	50	60	65	75	80	50	60	65	75	80
H8	50	60	70	75	85	55	60	70	75	85
H11	65	75	85	95	105	65	75	85	95	105
H12	95	110	125	140	155	95	115	130	140	155
H21	50	60	70	75	85	55	60	70	75	85

MP16 Shanks

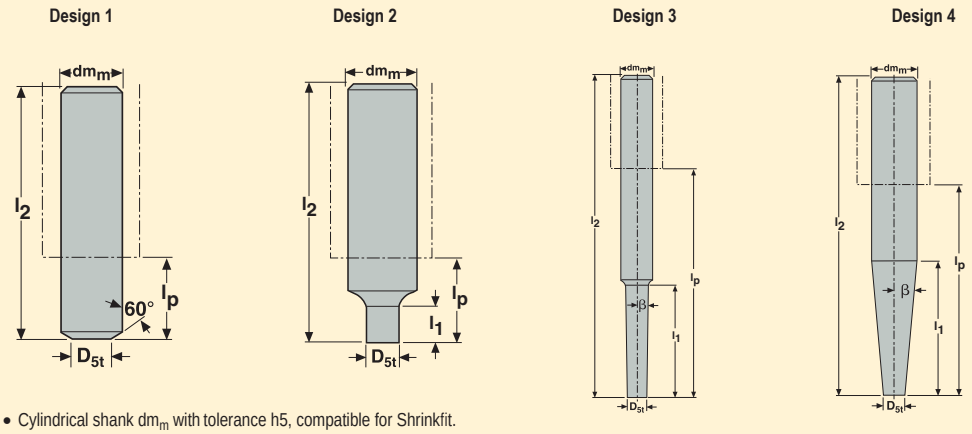

- Cylindrical shank dm_m with tolerance h5, compatible for Shrinkfit.
- Max RPM 63600 r/min

Part No.	Connecting size	Dimensions in mm D_{5t}	dm_m	l_2	l_p	l_1	β°	Design		KG
MP16 -16068-016.00	MP16	15,2	16	68	20	16	0	2	✓	0,1
-20070-000.60	MP16	15,2	20	70	20	0	60	1	✓	0,2
-20090-024.00	MP16	15,2	20	90	40	24	0	2	✓	0,2
-20190-056.01	MP16	15,2	20	190	140	56	1	3	✓	0,4
-20195-095.01	MP16	15,2	20	195	145	95	1	3	✓	0,4
-25136-075.03	MP16	15,2	25	136	80	75	3	3	✓	0,4
-25181-125.03	MP16	15,2	25	181	125	93,5	3	4	✓	0,6
-25181-125.05	MP16	15,2	25	181	125	56	5	4	✓	0,6
MP16 -16126-048.00-E	MP16	15,2	16	126	78	48	0	2	✓	0,4
-16140-064.00-E	MP16	15,2	16	140	92	64	0	2	✓	0,4
-16180-096.00-E	MP16	15,2	16	180	132	96	0	2	✓	0,5
-20135-080.01-E	MP16	15,2	20	135	85	80	1	3	✓	0,5
-20180-128.01-E	MP16	15,2	20	180	130	128	1	3	✓	0,7
-20200-150.01-E	MP16	15,2	20	200	150	137,5	1	4	✓	0,8
-20180-130.03-E	MP16	15,2	20	180	130	45,8	3	4	✓	0,8
-20210-160.03-E	MP16	15,2	20	210	160	45,8	3	4	✓	0,9

Accessories

Inserts	Torque key	Replacement blade	Key
MP16	MP00-16.190	MP00-16M	MP1016

Blades are included with the torque key

MP16 High feed

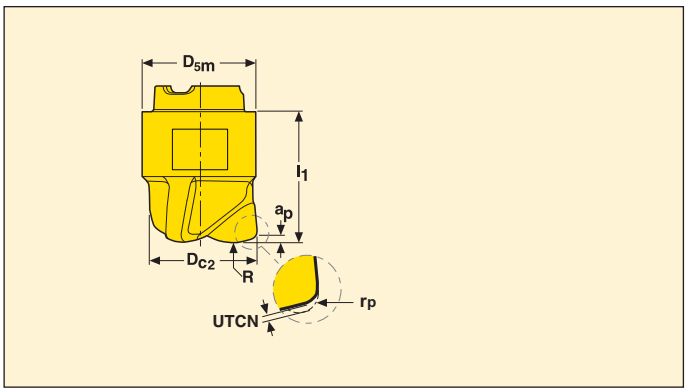

Z3

Part No.	Dimensions in mm							Z_c*		Coated				
										Grades				
	a_p	D_{c2}	R	r_p	D_{5m}	l_1	UTCN			MP3000	F40M			
MP16 -1600.9HFZ3-MD12	0,9	16	7,8	1,79	15,4	19,0	0,46	3	✓	■				

*Effective number of flutes
UTCN = Uncut thickness, deviation between programmed corner radii (r_p) and generated machined profile.

MP16 Square shoulder

Slotting and contouring

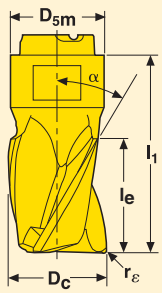

Z3

Part No.	Dimensions in mm D_c	r_ε	l_e	D_{5m}	l_1	α°	Z_c*		Coated Grades MP3000	F40M			
MP16 -15710KWZ3-E05	15,7	0,3	10,0	15,4	24,6	30	3	✓		■			
-16010R04Z3-E05	16,0	0,4	10,0	15,4	24,6	30	3	✓		■			
-16010R04Z3-M05	16,0	0,4	10,0	15,4	24,6	30	3	✓	■				
-16010R05Z3-E05	16,0	0,5	10,0	15,4	24,6	30	3	✓		■			
-16010R08Z3-E05	16,0	0,8	10,0	15,4	24,6	30	3	✓		■			
-16010R08Z3-M05	16,0	0,8	10,0	15,4	24,6	30	3	✓	■				
-16010R12Z3-E05	16,0	1,2	10,0	15,4	24,6	30	3	✓		■			
-16010R12Z3-M05	16,0	1,2	10,0	15,4	24,6	30	3	✓	■				
-16010R16Z3-E05	16,0	1,6	10,0	15,4	24,6	30	3	✓		■			
-16010R20Z3-E05	16,0	2,0	10,0	15,4	24,6	30	3	✓		■			
-16010R24Z3-E05	16,0	2,4	10,0	15,4	24,6	30	3	✓		■			
-16010R31Z3-E05	16,0	3,1	10,0	15,4	24,6	30	3	✓		■			
MP16 -15719KWZ3-E05	15,7	0,3	19	15,4	32,6	30	3	✓		■			
-16019R04Z3-E05	16	0,4	19	15,4	32,6	30	3	✓		■			
-16019R04Z3-M05	16	0,4	19	15,4	32,6	30	3	✓	■				
-16019R05Z3-E05	16	0,5	19	15,4	32,6	30	3	✓		■			
-16019R08Z3-E05	16	0,8	19	15,4	32,6	30	3	✓		■			
-16019R08Z3-M05	16	0,8	19	15,4	32,6	30	3	✓	■				
-16019R12Z3-E05	16	1,2	19	15,4	32,6	30	3	✓		■			
-16019R12Z3-M05	16	1,2	19	15,4	32,6	30	3	✓	■				
-16019R16Z3-E05	16	1,6	19	15,4	32,6	30	3	✓		■			
-16019R20Z3-E05	16	2,0	19	15,4	32,6	30	3	✓		■			
-16019R24Z3-E05	16	2,4	19	15,4	32,6	30	3	✓		■			
-16019R31Z3-E05	16	3,1	19	15,4	32,6	30	3	✓		■			

*Effective number of flutes

MP16 Square shoulder

Contouring only

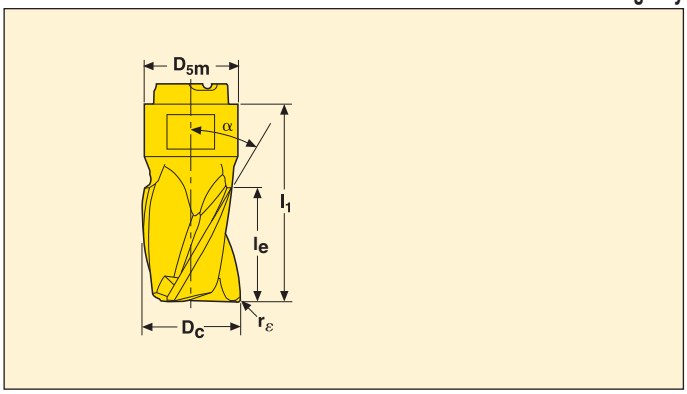

Z6/Z8

Part No.	Dimensions in mm						Zc*		Coated				
									Grades				
	Dc	rε	le	D5m	l1	α°			MP3000	F40M			
MP16 -16019R04Z6-M04	16	0,4	19	15,4	32,6	40	6		■				
MP16 -16019R04Z8-M04	16	0,4	19	15,4	32,6	40	8		■				

*Effective number of flutes

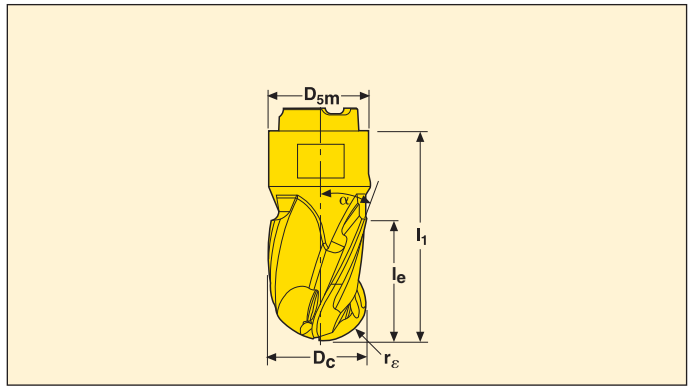

Z3

Part No.	Dimensions in mm						Zc*		Coated				
									Grades				
	Dc	rε	le	D5m	l1	α°			MP3000	F40M			
MP16 -16010B90Z3-E05	16,0	8,0	10,0	15,4	24,6	30	3	✓		■			
-16010B90Z3-M05	16,0	8,0	10,0	15,4	24,6	30	3	✓	■				
-16019B90Z3-E05	16	8	19,0	15,4	32,6	30	3	✓		■			
-16019B90Z3-M05	16	8	19,0	15,4	32,6	30	3	✓	■				

*Effective number of flutes

MP16 High feed milling – Insert selection

SMG		a_p	f_z 100%	70%	30%	20%
P1	MP16-1600.9HFZ3-MD12 MP3000	0,65	0,85	0,85	0,90	1,1
P2	MP16-1600.9HFZ3-MD12 MP3000	0,65	0,85	0,85	0,95	1,1
P3	MP16-1600.9HFZ3-MD12 MP3000	0,65	0,80	0,80	0,90	1,1
P4	MP16-1600.9HFZ3-MD12 MP3000	0,65	0,80	0,80	0,85	1,1
P5	MP16-1600.9HFZ3-MD12 MP3000	0,65	0,75	0,75	0,85	1,0
P6	MP16-1600.9HFZ3-MD12 MP3000	0,65	0,75	0,75	0,85	1,0
P7	MP16-1600.9HFZ3-MD12 MP3000	0,65	0,75	0,75	0,85	1,0
P8	MP16-1600.9HFZ3-MD12 MP3000	0,65	0,80	0,80	0,90	1,1
P11	MP16-1600.9HFZ3-MD12 MP3000	0,65	0,75	0,75	0,85	1,0
M1	MP16-1600.9HFZ3-MD12 MP3000	0,65	0,85	0,85	0,95	1,1
M2	MP16-1600.9HFZ3-MD12 MP3000	0,65	0,75	0,75	0,85	1,0
M3	MP16-1600.9HFZ3-MD12 MP3000	0,65	0,60	0,60	0,70	0,80
M4	MP16-1600.9HFZ3-MD12 MP3000	0,65	0,55	0,55	0,60	0,70
M5	MP16-1600.9HFZ3-MD12 MP3000	0,65	0,55	0,55	0,60	0,70
K1	MP16-1600.9HFZ3-MD12 MP3000	0,65	0,85	0,85	0,95	1,1
K2	MP16-1600.9HFZ3-MD12 MP3000	0,65	0,75	0,75	0,85	1,0
K3	MP16-1600.9HFZ3-MD12 MP3000	0,65	0,75	0,75	0,85	1,0
K4	MP16-1600.9HFZ3-MD12 MP3000	0,65	0,75	0,75	0,85	1,0
K5	MP16-1600.9HFZ3-MD12 MP3000	0,65	0,70	0,70	0,75	0,90
K6	MP16-1600.9HFZ3-MD12 MP3000	0,65	0,75	0,75	0,85	1,0
K7	MP16-1600.9HFZ3-MD12 MP3000	0,65	0,70	0,70	0,75	0,90
N1	MP16-1600.9HFZ3-MD12 MP3000	0,65	1,1	1,1	1,2	1,5
N2	MP16-1600.9HFZ3-MD12 MP3000	0,65	1,1	1,1	1,2	1,5
N3	MP16-1600.9HFZ3-MD12 MP3000	0,65	1,1	1,1	1,2	1,5
N11	MP16-1600.9HFZ3-MD12 MP3000	0,65	1,1	1,1	1,2	1,5
S1	MP16-1600.9HFZ3-MD12 MP3000	0,65	0,55	0,55	0,60	0,70
S2	MP16-1600.9HFZ3-MD12 MP3000	0,65	0,55	0,55	0,60	0,70
S3	MP16-1600.9HFZ3-MD12 MP3000	0,65	0,50	0,50	0,55	0,65
S11	MP16-1600.9HFZ3-MD12 MP3000	0,65	0,60	0,60	0,70	0,80
S12	MP16-1600.9HFZ3-MD12 MP3000	0,65	0,60	0,60	0,70	0,80
S13	MP16-1600.9HFZ3-MD12 MP3000	0,65	0,55	0,55	0,60	0,70
H5	MP16-1600.9HFZ3-MD12 MP3000	0,65	0,50	0,50	0,60	0,70
H7	MP16-1600.9HFZ3-MD12 MP3000	—	—	—	—	—
H11	MP16-1600.9HFZ3-MD12 MP3000	0,65	0,50	0,50	0,60	0,70
H12	MP16-1600.9HFZ3-MD12 MP3000	0,65	0,50	0,50	0,60	0,70
H21	MP16-1600.9HFZ3-MD12 MP3000	0,65	0,40	0,40	0,44	0,50

SMG = Seco material group
f_z = mm/tooth
v_c= m/min
a_e/D_c = %
All cutting data are start values

MP16 High feed milling – Cutting data v_c = (m/min)

SMG	MP3000			
	100%	70%	30%	20%
P1	210	260	320	335
P2	205	255	305	325
P3	180	220	265	280
P4	160	195	240	245
P5	155	190	230	240
P6	175	210	255	270
P7	165	200	240	255
P8	150	185	225	235
P11	160	195	235	250
M1	155	190	230	245
M2	130	160	190	200
M3	105	130	150	165
M4	80	100	120	125
M5	65	80	100	105
K1	165	200	240	260
K2	145	180	215	230
K3	125	150	185	195
K4	120	145	175	185
K5	70	90	105	115
K6	105	130	155	165
K7	90	115	135	145
N1	600	730	900	940
N2	485	590	730	760
N3	320	395	485	510
N11	370	450	550	580
S1	37	46	55	60
S2	30	37	45	47
S3	27	33	39	42
S11	55	65	75	80
S12	30	37	44	47
S13	24	30	36	38
H5	32	40	47	50
H8	34	42	50	55
H11	41	50	60	65
H12	60	75	90	95
H21	34	42	50	55

MP16 Slot milling – Insert selection

SMG		a_p	f_z 100%	f_z 30%	f_z 10%	f_z 5%
P1	MP16-16010R04Z3-M05 MP3000	4,0	0,070	0,075	0,12	0,17
P2	MP16-16010R04Z3-M05 MP3000	4,0	0,070	0,080	0,12	0,17
P3	MP16-16010R04Z3-M05 MP3000	4,0	0,070	0,075	0,11	0,16
P4	MP16-16010R04Z3-M05 MP3000	4,0	0,065	0,075	0,11	0,16
P5	MP16-16010R04Z3-M05 MP3000	4,0	0,065	0,070	0,11	0,15
P6	MP16-16010R04Z3-M05 MP3000	4,0	0,065	0,070	0,11	0,15
P7	MP16-16010R04Z3-M05 MP3000	4,0	0,065	0,070	0,11	0,15
P8	MP16-16010R04Z3-M05 MP3000	4,0	0,070	0,075	0,11	0,16
P11	MP16-16010R04Z3-M05 MP3000	4,0	0,065	0,070	0,11	0,15
M1	MP16-16010R04Z3-E05 F40M	4,0	0,070	0,080	0,12	0,17
M2	MP16-16010R04Z3-E05 F40M	4,0	0,065	0,070	0,11	0,15
M3	MP16-16010R04Z3-E05 F40M	3,5	0,050	0,055	0,090	0,12
M4	MP16-16010R04Z3-E05 F40M	2,5	0,046	0,050	0,075	0,11
M5	MP16-16010R04Z3-E05 F40M	2,5	0,046	0,050	0,075	0,11
K1	MP16-16010R04Z3-M05 MP3000	4,0	0,070	0,080	0,12	0,17
K2	MP16-16010R04Z3-M05 MP3000	4,0	0,065	0,070	0,11	0,15
K3	MP16-16010R04Z3-M05 MP3000	4,0	0,065	0,070	0,11	0,15
K4	MP16-16010R04Z3-M05 MP3000	4,0	0,065	0,070	0,11	0,15
K5	MP16-16010R04Z3-M05 MP3000	4,0	0,060	0,065	0,10	0,14
K6	MP16-16010R04Z3-M05 MP3000	4,0	0,065	0,070	0,11	0,15
K7	MP16-16010R04Z3-M05 MP3000	4,0	0,060	0,065	0,10	0,14
N1	MP16-16010R04Z3-E05 F40M	4,0	0,090	0,10	0,15	0,22
N2	MP16-16010R04Z3-E05 F40M	4,0	0,090	0,10	0,15	0,22
N3	MP16-16010R04Z3-E05 F40M	4,0	0,090	0,10	0,15	0,22
N11	MP16-16010R04Z3-E05 F40M	4,0	0,090	0,10	0,15	0,22
S1	MP16-16010R04Z3-E05 F40M	2,5	0,046	0,050	0,075	0,11
S2	MP16-16010R04Z3-E05 F40M	2,5	0,046	0,050	0,075	0,11
S3	MP16-16010R04Z3-E05 F40M	2,5	0,042	0,046	0,070	0,10
S11	MP16-16010R04Z3-E05 F40M	3,0	0,050	0,055	0,090	0,12
S12	MP16-16010R04Z3-E05 F40M	3,0	0,050	0,055	0,090	0,12
S13	MP16-16010R04Z3-E05 F40M	2,5	0,046	0,050	0,075	0,11
H5	MP16-16010R04Z3-M05 MP3000	3,5	0,044	0,048	0,075	0,10
H8	MP16-16010R04Z3-M05 MP3000	3,0	0,034	0,038	0,055	0,080
H11	MP16-16010R04Z3-M05 MP3000	3,5	0,044	0,048	0,075	0,10
H12	MP16-16010R04Z3-M05 MP3000	3,5	0,044	0,048	0,075	0,10
H21	MP16-16010R04Z3-M05 MP3000	3,0	0,034	0,038	0,055	0,080

SMG = Seco material group
f_z = mm/tooth
v_c= m/min
a_e/D_c = %
All cutting data are start values

MP16 Slot milling – Cutting data v_c = (m/min)

	MP3000				F40M			
SMG	100%	30%	10%	5%	100%	30%	10%	5%
P1	240	315	365	405	225	295	345	380
P2	230	300	355	390	220	285	335	365
P3	200	265	310	340	190	250	295	320
P4	180	230	275	300	170	220	260	280
P5	170	225	260	290	160	210	245	270
P6	190	250	295	325	180	240	280	305
P7	180	235	280	305	170	225	260	290
P8	170	220	260	285	160	210	245	270
P11	175	230	270	295	165	220	255	280
M1	175	225	265	290	175	230	270	295
M2	145	185	220	240	145	190	225	245
M3	115	150	175	190	115	155	180	195
M4	90	115	135	145	90	115	135	150
M5	75	95	110	120	75	100	115	125
K1	185	240	280	305	175	225	265	290
K2	160	215	250	275	155	200	235	260
K3	135	180	210	230	130	170	200	220
K4	130	170	200	220	125	160	190	210
K5	80	105	120	135	75	100	115	125
K6	115	150	175	195	110	145	165	185
K7	100	135	155	170	95	125	145	160
N1	680	890	1050	1150	650	840	1000	1075
N2	550	720	850	920	520	680	810	870
N3	370	480	570	620	350	455	540	580
N11	420	550	650	700	400	520	610	660
S1	41	55	65	70	42	55	65	70
S2	33	43	50	55	34	44	50	55
S3	29	38	44	48	30	39	45	49
S11	60	75	90	95	60	75	90	100
S12	34	44	50	55	34	45	50	55
S13	27	35	41	44	27	35	41	45
H5	35	46	55	60	35	46	55	60
H8	37	48	55	60	37	48	55	60
H11	45	60	70	75	45	60	70	75
H12	65	90	105	115	70	90	105	115
H21	37	48	55	60	37	48	55	60

MP16 Copy milling – Insert selection

SMG		a_p	f_z 100%	30%	10%	5%	2%
P1	MP16-16010R04Z3-M05 MP3000	4,0	0,070	0,075	0,12	0,17	0,26
P2	MP16-16010R04Z3-M05 MP3000	4,0	0,070	0,080	0,12	0,17	0,28
P3	MP16-16010R04Z3-M05 MP3000	4,0	0,070	0,075	0,11	0,16	0,26
P4	MP16-16010R04Z3-M05 MP3000	4,0	0,065	0,075	0,11	0,16	0,26
P5	MP16-16010R04Z3-M05 MP3000	4,0	0,065	0,070	0,11	0,15	0,24
P6	MP16-16010R04Z3-M05 MP3000	4,0	0,065	0,070	0,11	0,15	0,24
P7	MP16-16010R04Z3-M05 MP3000	4,0	0,065	0,070	0,11	0,15	0,24
P8	MP16-16010R04Z3-M05 MP3000	4,0	0,070	0,075	0,11	0,16	0,26
P11	MP16-16010R04Z3-M05 MP3000	4,0	0,065	0,070	0,11	0,15	0,24
M1	MP16-16010R04Z3-E05 F40M	4,0	0,070	0,080	0,12	0,17	0,28
M2	MP16-16010R04Z3-E05 F40M	4,0	0,065	0,070	0,11	0,15	0,24
M3	MP16-16010R04Z3-E05 F40M	3,5	0,050	0,055	0,090	0,12	0,19
M4	MP16-16010R04Z3-E05 F40M	2,5	0,046	0,050	0,075	0,11	0,17
M5	MP16-16010R04Z3-E05 F40M	2,5	0,046	0,050	0,075	0,11	0,17
K1	MP16-16010R04Z3-M05 MP3000	4,0	0,070	0,080	0,12	0,17	0,28
K2	MP16-16010R04Z3-M05 MP3000	4,0	0,065	0,070	0,11	0,15	0,24
K3	MP16-16010R04Z3-M05 MP3000	4,0	0,065	0,070	0,11	0,15	0,24
K4	MP16-16010R04Z3-M05 MP3000	4,0	0,065	0,070	0,11	0,15	0,24
K5	MP16-16010R04Z3-M05 MP3000	4,0	0,060	0,065	0,10	0,14	0,22
K6	MP16-16010R04Z3-M05 MP3000	4,0	0,065	0,070	0,11	0,15	0,24
K7	MP16-16010R04Z3-M05 MP3000	4,0	0,060	0,065	0,10	0,14	0,22
N1	MP16-16010R04Z3-E05 F40M	4,0	0,090	0,10	0,15	0,22	0,36
N2	MP16-16010R04Z3-E05 F40M	4,0	0,090	0,10	0,15	0,22	0,36
N3	MP16-16010R04Z3-E05 F40M	4,0	0,090	0,10	0,15	0,22	0,36
N11	MP16-16010R04Z3-E05 F40M	4,0	0,090	0,10	0,15	0,22	0,36
S1	MP16-16010R04Z3-E05 F40M	2,5	0,046	0,050	0,075	0,11	0,17
S2	MP16-16010R04Z3-E05 F40M	2,5	0,046	0,050	0,075	0,11	0,17
S3	MP16-16010R04Z3-E05 F40M	2,5	0,042	0,046	0,070	0,10	0,16
S11	MP16-16010R04Z3-E05 F40M	3,0	0,050	0,055	0,090	0,12	0,20
S12	MP16-16010R04Z3-E05 F40M	3,0	0,050	0,055	0,090	0,12	0,20
S13	MP16-16010R04Z3-E05 F40M	2,5	0,046	0,050	0,075	0,11	0,17
H5	MP16-16010R04Z3-M05 MP3000	3,5	0,044	0,048	0,075	0,10	0,16
H8	MP16-16010R04Z3-M05 MP3000	3,0	0,034	0,038	0,055	0,080	0,13
H11	MP16-16010R04Z3-M05 MP3000	3,5	0,044	0,048	0,075	0,10	0,16
H12	MP16-16010R04Z3-M05 MP3000	3,5	0,044	0,048	0,075	0,10	0,16
H21	MP16-16010R04Z3-M05 MP3000	3,0	0,034	0,038	0,055	0,080	0,13

SMG = Seco material group
f_z = mm/tooth
v_c= m/min
a_e/D_c = %
All cutting data are start values

MP16 Copy milling – Cutting data v_c = (m/min)

	MP3000					F40M				
SMG	100%	30%	10%	5%	2%	100%	30%	10%	5%	2%
P1	330	375	435	480	530	310	355	410	455	500
P2	320	365	420	465	510	305	345	400	440	485
P3	280	320	370	400	450	265	305	350	380	425
P4	245	285	325	355	395	230	270	305	340	375
P5	235	270	310	340	385	225	255	295	320	360
P6	265	305	355	385	430	250	285	335	360	405
P7	250	285	335	360	405	235	270	315	340	385
P8	235	270	310	340	380	220	255	295	320	355
P11	245	280	325	350	395	230	265	305	330	370
M1	240	275	315	350	385	245	280	320	355	390
M2	195	225	260	285	320	200	230	265	290	325
M3	160	185	205	230	255	165	190	210	230	260
M4	125	145	160	175	195	130	150	165	180	200
M5	105	120	135	145	160	110	125	135	150	165
K1	255	290	335	370	410	240	275	315	350	385
K2	225	255	295	325	365	210	245	280	305	345
K3	190	215	250	275	310	180	205	235	260	290
K4	180	210	240	260	295	170	195	225	245	275
K5	110	125	145	160	175	105	120	140	150	165
K6	160	185	210	230	260	150	175	200	220	245
K7	140	160	185	205	225	130	155	175	195	215
N1	950	1100	1250	1375	1525	900	1025	1175	1300	1425
N2	770	880	1000	1100	1225	730	830	960	1050	1150
N3	510	590	670	740	820	485	550	640	700	770
N11	590	670	770	850	930	550	630	730	800	880
S1	60	70	75	80	90	60	70	75	85	90
S2	48	55	60	65	75	49	55	60	65	75
S3	42	48	50	60	65	42	49	55	60	65
S11	85	95	105	115	130	85	95	105	115	130
S12	48	55	60	65	75	49	55	60	70	75
S13	38	44	48	55	60	39	45	49	55	60
H5	49	55	65	70	80	49	55	65	70	80
H8	50	60	65	75	80	50	60	65	75	85
H11	60	70	80	90	100	60	70	80	90	100
H12	95	110	125	135	150	95	110	125	135	150
H21	50	60	65	75	80	50	60	65	75	85

Note that parts of the code can vary for different types of insert or shanks

Code key shanks

Insert taper size		Shank diameter	Shank length		Shank type 0 = Cylindrical 3 = Cyl/Weldon	Angle of tapered part (10 = 1°)	Length of tapered part	High density anti vibration shank (without sleeve)	Modified version
MM10	-	16	160	.	0	- 10	35	DS	M

Code key, 3-flute Minimaster inserts

Insert taper size		Diameter (100 = 10,0)	Cutting edge length		Corner radius (B90 = ball nose)	Helix angle 30°		Edge geometry, E = easy operations M = medium operations D = difficult operations 03 = relative edge strength
MM10	-	100	12	-	R10	A30	-	M03

Code key, 2-flute Minimaster inserts

Insert taper size		Diameter (100 = 10,0)	Cutting edge length		Corner radius A = positive rake angle B = ball nose C = centre drill CR = concave radius 4525 = chamfer 45 x 2,5 mm Rxx-PL = Plunging		Edge geometry, E = for easy conditions M = for medium conditions D = for difficult conditions. 04 = relative edge strength
MM10	-	100	07	-	R04	-	MD04

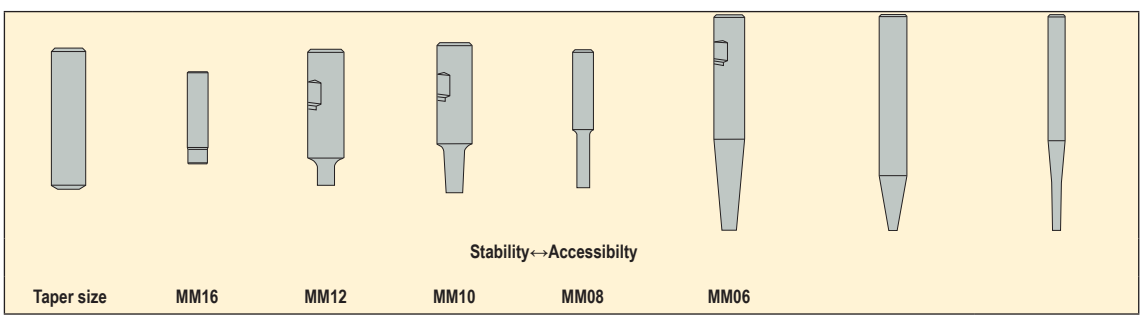

Mounting instructions for 2-flute Minimaster

During normal operations inserts are exchanged using the Minimaster wrench

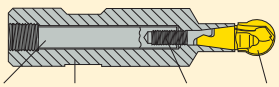

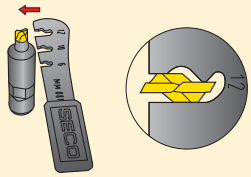

- The sleeve must be securely tightened in the shank before the tension screw and insert are fitted.
- If the wrench cannot be used for changing the insert (If the insert has broken off or jammed in the shank) , the sleeve can be released, which will also release the insert.
- Use Allen key (turn it anti-clockwise) to back off the sleeve until the insert is free.
- Re-tighten the sleeve in the shank before fitting the tension screw and the new insert.

For 3-flute Minimaster another key (MM0416) must be used (Key grip on hexagonal part of the insert.)

Make sure that the wrench is used correctly.

Mounting instructions for 2-flute Minimaster

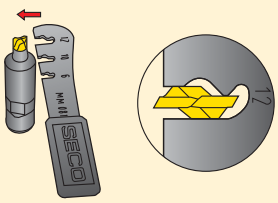

Make sure that the wrench is used correctly...

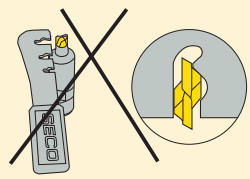

...if used on the wrong side, it will cause damage.

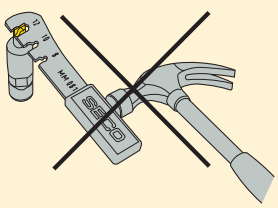

Do not use excessive force...

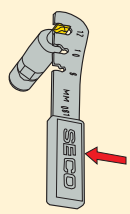

...normal hand-power is quite sufficient.

Choice of shanks, inserts and cutting data.

1 - Select taper size

The design of the workpiece and the machining operations determines suitable taper size. Select the largest possible taper size for best strength and stability.

2 - Select insert

a. Use the tables beginning on page 692 to classify the workpiece material into a Seco material group
b. Look up the pages for the selected taper size and choose a suitable insert in the insert selection table

3 - Select shank

a. Look up the pages for the selected taper size and choose a suitable shank in the tool data table
b. Always choose the shortest shank possible (to achieve best possible stability)

4 - Select cutting data

a. Cutting speed recommendations are found in the cutting data tables for each selected taper size. NOTE! Cutting data recommendations are based on stable conditions and might therefore need to be adjusted depending on the stability in the application (tooling, machine & workpiece fixturing). General rule for max a_p in slotting is Dc*0.3= Max a_p (See figure 1)
b. Feed and cutting speed recommendations are found in the cutting speed tables for the selected taper size and type
c. Maximum RPM that for safety reasons should never be exceeded, are shown on page 575
d. Feed per tooth recommendations are found in the selection tables for each selected taper size
e. If the cutter is not fully engaged the feed per tooth and the cutting speed should be increased compared to the recommendations for a fully engaged cutter. The reason for that is to keep the average chip thickness and the working temperature in the cutting zone.
f. Divide the radial depth of cut with the cutter diameter to get the actual cutter engagement percentage(a_e/D_c%), for ball nose cutters use the effective working diameter D_w instead of D_c (See figure 2 & 3)
g. Use the the percentage to get a correct feed per tooth and cutting speed recommendation

5.For Copy milling

a.When milling in corners and bottoms of cavities the feed rate should be reduced due to the increase of the average chip thickness. Use the feed per tooth recommendations for a fully engaged cutter.
b.When step down copying with an angle of more than 40° or step up copying with an angle bigger than 30° in combination with small depth of cut, use the diameter (D_c)

6.General

a. When calculating feed per revolution and feed speed, always use the z_c-value. That is the effective number of teeth to use for cutting data calculations. The zc-value can be found in the insert selection table.
b. NOTE: There will be a deterioration in the surface finish on the workpiece when the feed rate is increased (See figure 5 & 6)

Figure 1

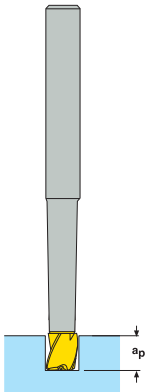

Figure 2

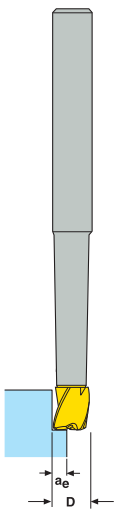

Figure 3

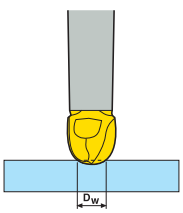

Figure 4

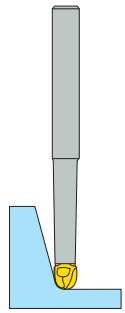

Figure 5

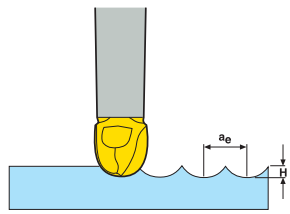

Figure 6

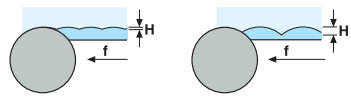

Taper size	For slot milling, with 3 flutes	For keyway milling, with 3 flutes	For copy milling, with 3 flutes	For slot milling	For slot milling, with positive (= easy cutting) geometry	For square shoulder milling	For keyway milling
MM16	D = 16, D = 20	D = 15,7, D = 19,7	D = 16, D = 20	D = 16, D = 20	D = 16, D = 20	D = 16, D = 20	D = 15,7
MM12	D = 12	D = 11,7	D = 12	D = 12, D = 14	D = 12, D = 14	D = 12, D = 14	D = 11,7, D = 13,7
MM10	D = 10	D = 9,525	D = 10	D = 10	D = 10	D = 10	D = 9,8
MM08	D = 08	D = 7,8	D = 08	D = 08	D = 08	D = 08	D = 7,8
MM06	D = 06	D = 5,8	D = 06	D = 06	D = 06	D = 06	D = 5,8

Taper size	For centre drilling	For chamfer milling	For milling of external radius	For copying with 90º cutting angle	For copying, with 120º cutting angle	For plunge milling
MM16	D = 16	D = 16	–	D = 16, D = 20	D = 20	D = 16
MM12	D = 12	–	D = 12	D = 12, D = 14	D = 14, D = 16	D = 12
MM10	D = 10	D = 10	–	D = 10	D = 12	D = 10
MM08	D = 08	D = 08	–	D = 08	D =10	D = 08
MM06	D = 06	D = 06	–	D = 06	D = 08	D = 06

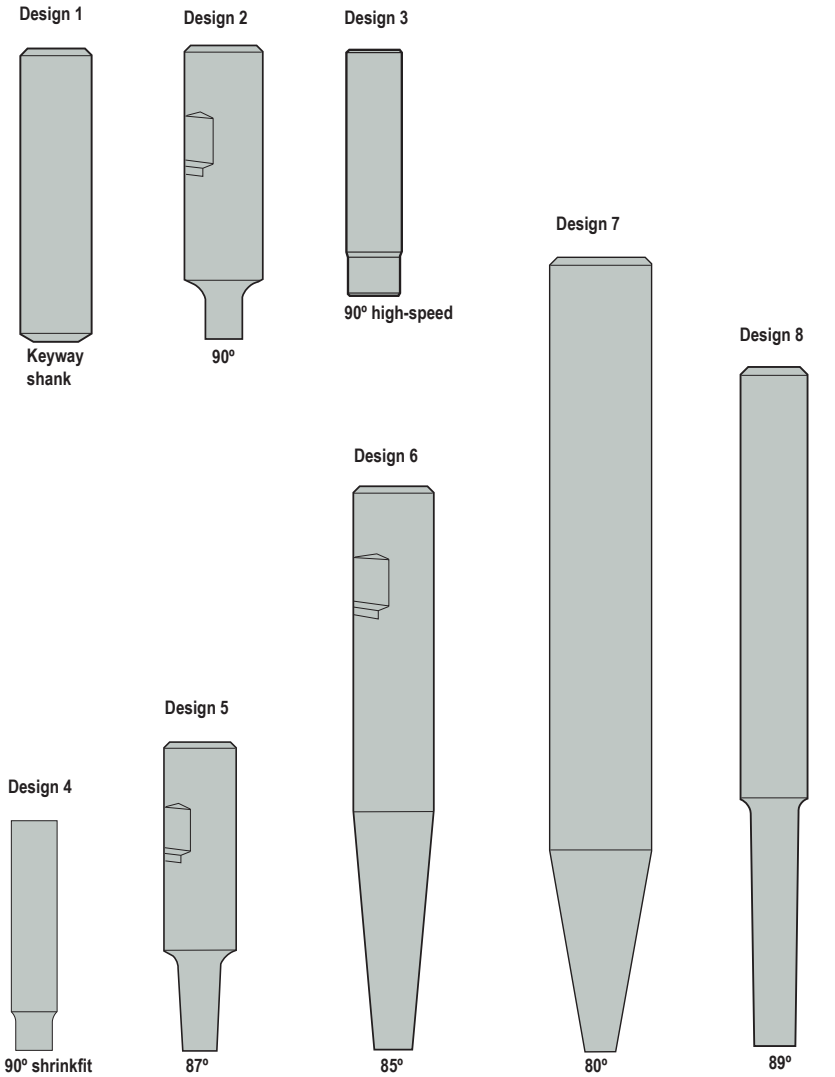
Design 1
Keyway shank
Design 2
90º
Design 3
90º high-speed
Design 7
80º
Design 8
89º
Design 6
85º
Design 5
87º
Design 4
90º shrinkfit

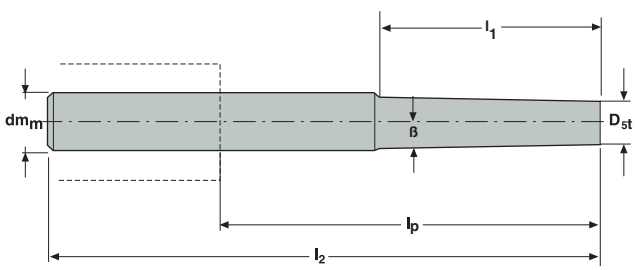
l1
dmm
ß
D5t
lp
l2

MM06

Design	Part No.	Connecting size	Dimensions in mm						KG	Spare part no.
			D_{5t}	dm_m	β°	l_1	l_2	l_p		
1	MM06- 12065.0-0000	MM06	5,7	12	60	0	65	15	0,1	1
2	MM06- 10040.0-0007	MM06	5,75	10	0	7	40	7	0,1	2
3	MM06- 10050.0-0007DS	MM06	5,75	10	0	7	50	7	0,1	3
4	MM06- 12070.3-0005	MM06	5,75	12	0	5	70	25	0,1	1
4	16090.0-0012DS	MM06	5,75	16	0	12	90	42	0,3	3
4	16095.0-0024DS	MM06	5,75	16	0	24	95	47	0,3	3
5	MM06- 16075.3-3009	MM06	5,75	16	3	9	75	27	0,1	1
5	10075.0-3041DS	MM06	5,75	10	3	40,5	75	35	0,1	3
6	MM06- 12120.0-1050DS	MM06	5,75	12	1	50	120	75	0,2	3
7	MM06- 16110.3-5058	MM06	5,75	16	5	58,6	110	62	0,2	4
7	16140.0-1020M	MM06	5,75	16	1	20	140	92	0,2	5
7	16140.0-1035M	MM06	5,75	16	1	35	140	92	0,2	6
7	16140.0-1035DS	MM06	5,75	16	1	35	140	92	0,4	3
7	20250.0-1035DS	MM06	5,75	20	1	35	250	190	1,0	3
7	16140.0-1050DS	MM06	5,75	16	1	50	140	92	0,3	3
7	16140.0-1050M	MM06	5,75	16	1	50	140	92	0,2	6
8	MM06- 10100.0-1035DS	MM06	5,75	10	1	35	100	60	0,1	3

Spare Parts

Spare part no.	Tension screw	Sleeve
1		–
2		–
3		–
4		–
5		–
6		–

Please check availability in current price and stock-list.
Allen key H05-4 for sleeve to be ordered separately.

For wrench types, see insert pages 428 - 431.

Slot milling/ square shoulder milling

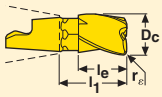

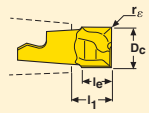

Insert type	Part No.	Dimensions in mm D_c	r_ε	l_e	l_1	Z_c*	Wrench	Coated Grades T60M	F15M	F30M	F40M
3-flute	MM06 -06007-A30-E02	6	0	7,5	9,9	3	MM0416			■	
3-flute	-06007-R05A30-M02	6	0,5	7,5	9,9	3	MM0416				■
3-flute	-06007-R10A30-E02	6	1,0	7,5	9,9	3	MM0416			■	
3-flute	-06007-R10A30-M02	6	1,0	7,5	9,9	3	MM0416				■
3-flute	-06007-R10A30-D02	6	1,0	7,5	9,9	3	MM0416			■	
3-flute	-06007-R20A30-M02	6	2,0	7,5	9,9	3	MM0416				■
3-flute	MM06 -06407-A30-E02	6,35	0	7,5	9,9	3	MM0416			■	
3-flute	-06407-R04A30-M02	6,35	0,4	7,5	9,9	3	MM0416				■
3-flute	-06407-R08A30-M02	6,35	0,8	7,5	9,9	3	MM0416				■
3-flute	-06407-R08A30-D02	6,35	0,8	7,5	9,9	3	MM0416			■	
2-flute	MM06 -06004-M02	6	0	4,1	5,09	2	MM0612	■			
2-flute	-06004-R04-MD02	6	0,4	4,1	5,08	2	MM0612	■		■	
2-flute	-06004-R10-MD02	6	1,0	4,1	5,06	2	MM0612			■	
2-flute	-06004-R20-MD02	6	2,0	4,1	5,05	2	MM0612			■	
2-flute	MM06 -06404-R04-MD02	6,35	0,4	4,1	5,08	2	MM0612	■			
2-flute	-06404-M02	6,35	0	4,1	5,09	2	MM0612	■			
Keyway 3-flute	MM06 -05807-R02A30-M02	5,8	0,2	7,5	9,9	3	MM0612				■
Keyway 2-flute	-05804T-R02-D02	5,8	0,2	4,1	5,08	2	MM0612	■			

*Effective number of flutes

For Torque keys and torque values, see page

Centre drilling

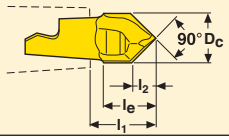

Insert type	Part No.	Dimensions in mm				Z_c*	Wrench	Coated				
								Grades				
		D_c	l_e	l_1	l_2			T60M	F15M	F30M	F40M	
90°	MM06 -06003-C90-M02	6	6	7,12	2,86	2	MM0612	■				
120°	MM06 -06003-C120-M02	6	6,27	7,19	1,60	2	MM0612	■				

Chamfering

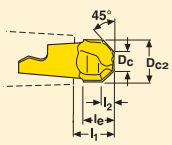

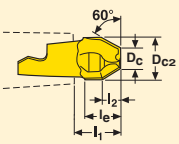

Insert type	Part No.	Dimensions in mm					Z_c*	Wrench	Coated				
									Grades				
		D_c	D_{c2}	l_e	l_1	l_2			T60M	F15M	F30M	F40M	
45°	MM06 -06004-4515-E02	1,8	6,0	4	5,1	2,10	2	MM0612	■				
60°	MM06 -06004-6015-E02	3,14	6,0	4,6	5,75	2,40	2	MM0612	■				

*Effective number of flutes

For Torque keys and torque values, see page

Double chamfering

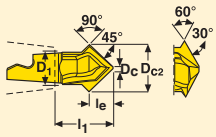

Insert type	Part No.	Dimensions in mm					Z_c*	Wrench	Coated				
									Grades				
		D_c	D_{c2}	l_e	l_1	R			T60M	F15M	F30M	F40M	
45°	MM06 -08008-D4510P-M02	0,6	8	3,7	8,5	6	2	MM0612		■			

*Effective number of flutes
For Torque keys and torque values, see page

Plunge milling

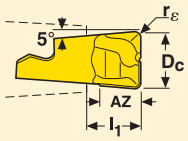

Insert type	Part No.	Dimensions in mm				Zc*	Wrench	Coated				
								Grades				
		Dc	rε	AZ	l1			T60M	F15M	F30M	F40M	
2-flute	MM06 -06004-R10-PL-MD02	6	1,0	4,3	5,08	2	MM0612			■		

Precision inserts for semi-finishing in all materials

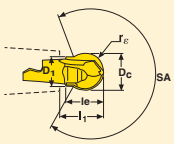

Insert type	Part No.	Dimensions in mm						Zc*	Wrench	Coated				
										Grades				
		Dc	rε	le	l1	D1	SA°			T60M	F15M	F30M	F40M	
2-flute	MM06 -08008-B120PF-M01	8	4,0	8	8,73	6	263,0	2	MM0612		■			
2-flute	-08008-B120P-M03	8	4,0	8	8,73	6	263,0	2	MM0612			■		

*Effective number of flutes
For Torque keys and torque values, see page

Copy milling

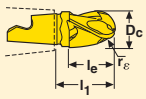

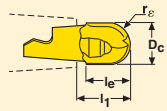

Insert type	Part No.	Dimensions in mm D_c	r_ε	l_e	l_1	Z_c*	Wrench	Coated Grades T60M	F15M	F30M	F40M
3-flute	MM06 -06007-B90A30-E02	6	3,0	7,46	9,85	3	MM0416			■	
3-flute	-06007-B90A30-M02	6	3,0	7,46	9,85	3	MM0416				■
3-flute	-06007-B90A30-D02	6	3,0	7,46	9,85	3	MM0416			■	
3-flute	-06407-B90A30-E02	6,35	3,175	7,46	9,85	3	MM0416			■	
3-flute	-06407-B90A30-M02	6,35	3,175	7,46	9,85	3	MM0416				■
3-flute	-06407-B90A30-D02	6,35	3,175	7,46	9,85	3	MM0416			■	
2-flute	MM06 -06006-B90-MD02	6	3,0	6,14	7,06	2	MM0612	■		■	
2-flute	-06006-B90S-E02	6	3,0	6,14	7,06	2	MM0612			■	
2-flute	-06406-B90S-E02	6,35	3,175	6,32	7,24	2	MM0612			■	
2-flute	MM06 -06006-B90P-M02	6	3,0	5,24	7,04	2	MM0612			■	
2-flute	-06406-B90P-M02	6,35	3,175	5,41	7,22	2	MM0612			■	
2-flute	-06006-B90PF-M01	6	3,0	5,24	7,04	2	MM0612		■		

*Effective number of flutes

For Torque keys and torque values, see page

MM06-General_Selection

SMG		a_p	f_z			
			100%	40%	20%	10%
P1	MM06-06007-R05A30-M02 F40M	1,3	0,030	0,030	0,038	0,050
P2	MM06-06007-R05A30-M02 F40M	1,3	0,030	0,032	0,038	0,050
P3	MM06-06007-R05A30-M02 F40M	1,3	0,028	0,030	0,036	0,048
P4	MM06-06007-R05A30-M02 F40M	1,3	0,028	0,030	0,036	0,048
P5	MM06-06007-R05A30-M02 F40M	1,3	0,028	0,028	0,034	0,046
P6	MM06-06007-R05A30-M02 F40M	1,3	0,028	0,028	0,034	0,046
P7	MM06-06007-R05A30-M02 F40M	1,3	0,028	0,028	0,034	0,046
P8	MM06-06007-R05A30-M02 F40M	1,3	0,028	0,030	0,036	0,048
P11	MM06-06007-R05A30-M02 F40M	1,3	0,028	0,028	0,034	0,046
M1	MM06-06007-R05A30-M02 F40M	1,3	0,030	0,032	0,038	0,050
M2	MM06-06007-R05A30-M02 F40M	1,3	0,028	0,028	0,034	0,046
M3	MM06-06007-R05A30-M02 F40M	1,0	0,024	0,024	0,030	0,040
M4	MM06-06007-R05A30-M02 F40M	0,75	0,022	0,022	0,028	0,036
M5	MM06-06007-R05A30-M02 F40M	0,75	0,022	0,022	0,028	0,036
K1	MM06-06007-R10A30-D02 F30M	1,3	0,036	0,036	0,046	0,060
K2	MM06-06007-R10A30-D02 F30M	1,3	0,032	0,034	0,042	0,055
K3	MM06-06007-R10A30-D02 F30M	1,3	0,032	0,034	0,042	0,055
K4	MM06-06007-R10A30-D02 F30M	1,3	0,032	0,034	0,042	0,055
K5	MM06-06007-R10A30-D02 F30M	1,3	0,030	0,030	0,038	0,050
K6	MM06-06007-R10A30-D02 F30M	1,3	0,032	0,034	0,042	0,055
K7	MM06-06007-R10A30-D02 F30M	1,3	0,030	0,030	0,038	0,050
N1	MM06-06007-R10A30-E02 F30M	1,3	0,046	0,046	0,060	0,080
N2	MM06-06007-R10A30-E02 F30M	1,3	0,046	0,046	0,060	0,080
N3	MM06-06007-R10A30-E02 F30M	1,3	0,046	0,046	0,060	0,080
N11	MM06-06007-R10A30-E02 F30M	1,3	0,046	0,046	0,060	0,080
S1	MM06-06007-R10A30-D02 F30M	0,75	0,030	0,030	0,038	0,050
S2	MM06-06007-R10A30-D02 F30M	0,75	0,030	0,030	0,038	0,050
S3	MM06-06007-R10A30-D02 F30M	0,75	0,028	0,028	0,034	0,046
S11	MM06-06007-R05A30-M02 F40M	0,90	0,024	0,024	0,030	0,040
S12	MM06-06007-R05A30-M02 F40M	0,90	0,024	0,024	0,030	0,040
S13	MM06-06007-R05A30-M02 F40M	0,75	0,022	0,022	0,028	0,036
H5	MM06-06007-R10A30-D02 F30M	1,0	0,026	0,026	0,032	0,042
H8	MM06-06007-R10A30-D02 F30M	0,90	0,020	0,020	0,026	0,034
H11	MM06-06007-R10A30-D02 F30M	1,0	0,026	0,026	0,032	0,042
H12	MM06-06007-R10A30-D02 F30M	1,0	0,026	0,026	0,032	0,042
H21	MM06-06007-R10A30-D02 F30M	0,90	0,020	0,020	0,026	0,034

SMG = Seco material group
f_z = mm/tooth
v_c= m/min
a_e/D_c = %
All cutting data are start values

MM06-General – Cutting data

	F30M				F40M				T60M			
SMG	100%	40%	20%	10%	100%	40%	20%	10%	100%	40%	20%	10%
P1	310	375	425	465	280	350	385	425	255	300	345	380
P2	300	365	410	455	275	340	375	415	245	290	335	365
P3	260	320	355	390	235	290	325	360	215	250	290	320
P4	230	280	315	345	210	260	285	315	190	225	255	280
P5	220	270	300	330	200	250	275	300	180	215	245	270
P6	250	300	340	370	225	280	310	340	205	240	275	300
P7	235	285	320	350	210	260	295	320	190	225	260	285
P8	220	270	300	330	200	245	275	300	180	210	245	265
P11	225	275	310	340	205	255	285	310	185	220	250	275
M1	240	295	330	365	220	275	305	335	200	235	270	295
M2	200	240	270	300	180	225	250	270	165	190	220	240
M3	155	185	210	235	140	175	195	215	125	145	170	190
M4	120	140	160	175	110	130	150	165	95	105	125	145
M5	100	120	135	145	90	110	125	135	80	90	100	120
K1	235	290	325	360	215	270	300	325	195	230	265	290
K2	210	255	285	315	190	235	265	285	170	200	230	255
K3	175	215	240	265	160	200	220	245	145	170	195	215
K4	170	205	230	255	155	190	210	230	140	165	185	205
K5	100	125	140	155	90	115	125	140	85	100	115	125
K6	150	180	205	225	135	165	185	205	120	145	165	180
K7	130	160	180	195	120	145	165	180	105	125	145	160
N1	900	1100	1250	1375	820	1025	1125	1250	750	880	1025	1125
N2	730	890	1000	1100	660	820	920	1000	610	710	820	900
N3	485	600	670	740	440	550	610	670	405	475	550	600
N11	550	680	760	840	510	630	700	770	460	540	630	690
S1	55	65	75	80	50	60	70	75	45	50	55	65
S2	44	55	60	65	41	50	55	60	36	40	46	55
S3	39	46	50	60	35	43	48	55	32	35	40	47
S11	80	95	105	120	70	90	100	110	65	70	85	95
S12	45	55	60	70	41	50	55	60	37	42	48	55
S13	36	43	48	55	33	40	45	49	29	32	37	43
H5	46	55	65	70	42	50	60	65	—	—	—	—
H8	47	55	65	70	43	55	60	65	—	—	—	—
H11	60	70	80	90	55	65	75	80	—	—	—	—
H12	95	115	130	145	85	110	120	130	—	—	—	—
H21	47	55	65	70	43	55	60	65	—	—	—	—

MM06 Z3-Copy – Insert selection – Roughing

SMG		a_p	f_z 100%	f_z 40%	f_z 20%	f_z 10%
P1	MM06-06007-B90A30-M02 F40M	1,3	0,040	0,040	0,050	0,065
P2	MM06-06007-B90A30-M02 F40M	1,3	0,040	0,042	0,050	0,070
P3	MM06-06007-B90A30-M02 F40M	1,3	0,038	0,040	0,048	0,065
P4	MM06-06007-B90A30-M02 F40M	1,3	0,038	0,038	0,048	0,065
P5	MM06-06007-B90A30-M02 F40M	1,3	0,036	0,038	0,046	0,060
P6	MM06-06007-B90A30-M02 F40M	1,3	0,036	0,038	0,046	0,060
P7	MM06-06007-B90A30-M02 F40M	1,3	0,036	0,038	0,046	0,060
P8	MM06-06007-B90A30-M02 F40M	1,3	0,038	0,040	0,048	0,065
P11	MM06-06007-B90A30-M02 F40M	1,3	0,036	0,038	0,046	0,060
M1	MM06-06007-B90A30-M02 F40M	1,3	0,040	0,042	0,050	0,070
M2	MM06-06007-B90A30-M02 F40M	1,3	0,036	0,038	0,046	0,060
M3	MM06-06007-B90A30-M02 F40M	1,0	0,030	0,030	0,036	0,050
M4	MM06-06007-B90A30-M02 F40M	0,75	0,026	0,026	0,032	0,044
M5	MM06-06007-B90A30-M02 F40M	0,75	0,026	0,026	0,032	0,044
K1	MM06-06007-B90A30-E02 F30M	1,3	0,040	0,042	0,050	0,070
K2	MM06-06007-B90A30-E02 F30M	1,3	0,036	0,038	0,046	0,060
K3	MM06-06007-B90A30-E02 F30M	1,3	0,036	0,038	0,046	0,060
K4	MM06-06007-B90A30-E02 F30M	1,3	0,036	0,038	0,046	0,060
K5	MM06-06407-B90A30-D02 F30M	1,3	0,034	0,034	0,042	0,055
K6	MM06-06407-B90A30-D02 F30M	1,3	0,036	0,038	0,046	0,060
K7	MM06-06407-B90A30-D02 F30M	1,3	0,034	0,034	0,042	0,055
N1	MM06-06407-B90A30-E02 F30M	1,3	0,050	0,055	0,065	0,085
N2	MM06-06407-B90A30-E02 F30M	1,3	0,050	0,055	0,065	0,085
N3	MM06-06407-B90A30-E02 F30M	1,3	0,050	0,055	0,065	0,085
N11	MM06-06407-B90A30-E02 F30M	1,3	0,050	0,055	0,065	0,085
S1	MM06-06407-B90A30-D02 F30M	0,75	0,026	0,026	0,032	0,044
S2	MM06-06407-B90A30-D02 F30M	0,75	0,026	0,026	0,032	0,044
S3	MM06-06407-B90A30-D02 F30M	0,75	0,024	0,024	0,030	0,040
S11	MM06-06007-R05A30-M02 F40M	0,90	0,024	0,024	0,030	0,040
S12	MM06-06007-R05A30-M02 F40M	0,90	0,024	0,024	0,030	0,040
S13	MM06-06007-R05A30-M02 F40M	0,75	0,022	0,022	0,028	0,036
H5	MM06-06407-B90A30-D02 F30M	1,0	0,026	0,026	0,032	0,042
H8	MM06-06407-B90A30-D02 F30M	0,90	0,019	0,020	0,024	0,032
H11	MM06-06407-B90A30-D02 F30M	1,0	0,026	0,026	0,032	0,042
H12	MM06-06407-B90A30-D02 F30M	1,0	0,026	0,026	0,032	0,042
H21	MM06-06407-B90A30-D02 F30M	0,90	0,019	0,020	0,024	0,032

SMG = Seco material group
f_z = mm/tooth
v_c= m/min
a_e/D_c = %
All cutting data are start values

MM06 Z3-Copy – Insert selection – Semi finishing

SMG		a_p	f_z			
			15%	10%	5%	2%
P1	MM06-06007-B90A30-E02 F30M	1,3	0,055	0,065	0,095	0,16
P2	MM06-06007-B90A30-E02 F30M	1,3	0,055	0,070	0,095	0,16
P3	MM06-06007-B90A30-E02 F30M	1,3	0,055	0,065	0,090	0,15
P4	MM06-06007-B90A30-E02 F30M	1,3	0,055	0,065	0,090	0,15
P5	MM06-06007-B90A30-E02 F30M	1,3	0,050	0,060	0,085	0,14
P6	MM06-06007-B90A30-E02 F30M	1,3	0,050	0,060	0,085	0,14
P7	MM06-06007-B90A30-E02 F30M	1,3	0,050	0,060	0,085	0,14
P8	MM06-06007-B90A30-E02 F30M	1,3	0,055	0,065	0,090	0,15
P11	MM06-06007-B90A30-E02 F30M	1,3	0,050	0,060	0,085	0,14
M1	MM06-06007-B90A30-E02 F30M	1,3	0,055	0,070	0,095	0,16
M2	MM06-06007-B90A30-E02 F30M	1,3	0,050	0,060	0,085	0,14
M3	MM06-06007-B90A30-E02 F30M	1,0	0,042	0,050	0,070	0,11
M4	MM06-06007-B90A30-E02 F30M	0,75	0,036	0,044	0,060	0,095
M5	MM06-06007-B90A30-E02 F30M	0,75	0,036	0,044	0,060	0,095
K1	MM06-06007-B90A30-E02 F30M	1,3	0,055	0,070	0,095	0,16
K2	MM06-06007-B90A30-E02 F30M	1,3	0,050	0,060	0,085	0,14
K3	MM06-06007-B90A30-E02 F30M	1,3	0,050	0,060	0,085	0,14
K4	MM06-06007-B90A30-E02 F30M	1,3	0,050	0,060	0,085	0,14
K5	MM06-06007-B90A30-E02 F30M	1,3	0,046	0,055	0,080	0,13
K6	MM06-06007-B90A30-E02 F30M	1,3	0,050	0,060	0,085	0,14
K7	MM06-06007-B90A30-E02 F30M	1,3	0,046	0,055	0,080	0,13
N1	MM06-06007-B90A30-E02 F30M	1,3	0,075	0,085	0,12	0,20
N2	MM06-06007-B90A30-E02 F30M	1,3	0,075	0,085	0,12	0,20
N3	MM06-06007-B90A30-E02 F30M	1,3	0,075	0,085	0,12	0,20
N11	MM06-06007-B90A30-E02 F30M	1,3	0,075	0,085	0,12	0,20
S1	MM06-06007-B90A30-E02 F30M	0,75	0,036	0,044	0,060	0,095
S2	MM06-06007-B90A30-E02 F30M	0,75	0,036	0,044	0,060	0,095
S3	MM06-06407-B90A30-D02 F30M	0,75	0,034	0,040	0,055	0,090
S11	MM06-06007-B90A30-E02 F30M	0,90	0,042	0,050	0,070	0,11
S12	MM06-06007-B90A30-E02 F30M	0,90	0,042	0,050	0,070	0,11
S13	MM06-06007-B90A30-E02 F30M	0,75	0,036	0,044	0,060	0,095
H5	MM06-06407-B90A30-E02 F30M	1,0	0,036	0,042	0,060	0,095
H8	MM06-06407-B90A30-E02 F30M	0,90	0,026	0,032	0,044	0,070
H11	MM06-06407-B90A30-E02 F30M	1,0	0,036	0,042	0,060	0,095
H12	MM06-06407-B90A30-E02 F30M	1,0	0,036	0,042	0,060	0,095
H21	MM06-06407-B90A30-E02 F30M	0,90	0,026	0,032	0,044	0,070

SMG = Seco material group
f_z = mm/tooth
v_c= m/min
a_e/D_c = %
All cutting data are start values

MM06 Z3-Copy_Selection – Finishing

SMG		a_p	f_z			
			15%	10%	5%	2%
P1	MM06-06007-B90A30-E02 F30M	1,3	0,055	0,065	0,095	0,16
P2	MM06-06007-B90A30-E02 F30M	1,3	0,055	0,070	0,095	0,16
P3	MM06-06007-B90A30-E02 F30M	1,3	0,055	0,065	0,090	0,15
P4	MM06-06007-B90A30-E02 F30M	1,3	0,055	0,065	0,090	0,15
P5	MM06-06007-B90A30-E02 F30M	1,3	0,050	0,060	0,085	0,14
P6	MM06-06007-B90A30-E02 F30M	1,3	0,050	0,060	0,085	0,14
P7	MM06-06007-B90A30-E02 F30M	1,3	0,050	0,060	0,085	0,14
P8	MM06-06007-B90A30-E02 F30M	1,3	0,055	0,065	0,090	0,15
P11	MM06-06007-B90A30-E02 F30M	1,3	0,050	0,060	0,085	0,14
M1	MM06-06007-B90A30-E02 F30M	1,3	0,055	0,070	0,095	0,16
M2	MM06-06007-B90A30-E02 F30M	1,3	0,050	0,060	0,085	0,14
M3	MM06-06007-B90A30-E02 F30M	1,0	0,042	0,050	0,070	0,11
M4	MM06-06007-B90A30-E02 F30M	0,75	0,036	0,044	0,060	0,095
M5	MM06-06007-B90A30-E02 F30M	0,75	0,036	0,044	0,060	0,095
K1	MM06-06007-B90A30-E02 F30M	1,3	0,055	0,070	0,095	0,16
K2	MM06-06007-B90A30-E02 F30M	1,3	0,050	0,060	0,085	0,14
K3	MM06-06007-B90A30-E02 F30M	1,3	0,050	0,060	0,085	0,14
K4	MM06-06007-B90A30-E02 F30M	1,3	0,050	0,060	0,085	0,14
K5	MM06-06007-B90A30-E02 F30M	1,3	0,046	0,055	0,080	0,13
K6	MM06-06007-B90A30-E02 F30M	1,3	0,050	0,060	0,085	0,14
K7	MM06-06007-B90A30-E02 F30M	1,3	0,046	0,055	0,080	0,13
N1	MM06-06007-B90A30-E02 F30M	1,3	0,075	0,085	0,12	0,20
N2	MM06-06007-B90A30-E02 F30M	1,3	0,075	0,085	0,12	0,20
N3	MM06-06007-B90A30-E02 F30M	1,3	0,075	0,085	0,12	0,20
N11	MM06-06007-B90A30-E02 F30M	1,3	0,075	0,085	0,12	0,20
S1	MM06-06007-B90A30-E02 F30M	0,75	0,036	0,044	0,060	0,095
S2	MM06-06007-B90A30-E02 F30M	0,75	0,036	0,044	0,060	0,095
S3	MM06-06007-B90A30-E02 F30M	0,75	0,034	0,040	0,055	0,090
S11	MM06-06007-B90A30-E02 F30M	0,90	0,042	0,050	0,070	0,11
S12	MM06-06007-B90A30-E02 F30M	0,90	0,042	0,050	0,070	0,11
S13	MM06-06007-B90A30-E02 F30M	0,75	0,036	0,044	0,060	0,095
H5	MM06-06007-B90A30-E02 F30M	1,0	0,036	0,042	0,060	0,095
H8	MM06-06007-B90A30-E02 F30M	0,90	0,026	0,032	0,044	0,070
H11	MM06-06007-B90A30-E02 F30M	1,0	0,036	0,042	0,060	0,095
H12	MM06-06007-B90A30-E02 F30M	1,0	0,036	0,042	0,060	0,095
H21	MM06-06007-B90A30-E02 F30M	0,90	0,026	0,032	0,044	0,070

SMG = Seco material group
f_z = mm/tooth
v_c= m/min
a_e/D_c = %
All cutting data are start values

MM06 Z3-Copy – Cutting data

	F30M					F40M				
SMG	100%	20%	10%	5%	2%	100%	20%	10%	5%	2%
P1	355	465	510	560	630	340	440	485	530	600
P2	345	450	495	550	600	330	425	475	520	580
P3	295	390	435	470	530	285	370	415	445	500
P4	265	345	380	420	465	250	330	365	400	440
P5	250	330	365	400	450	240	315	345	380	425
P6	285	370	410	450	500	270	355	390	425	480
P7	265	350	385	420	475	255	335	370	400	450
P8	250	330	365	395	440	240	315	345	375	420
P11	260	340	375	410	460	245	325	355	390	440
M1	280	360	400	440	485	265	345	380	420	465
M2	225	300	330	360	405	215	285	310	340	385
M3	180	235	255	280	315	170	225	245	270	300
M4	135	180	195	215	240	130	175	185	205	230
M5	115	150	160	180	200	110	145	155	170	190
K1	275	355	395	430	480	260	340	375	410	455
K2	240	315	345	380	425	230	300	330	360	405
K3	205	265	295	320	360	195	255	280	305	340
K4	195	255	280	305	345	185	240	265	290	325
K5	115	155	170	185	205	110	145	160	175	195
K6	170	225	245	270	300	160	215	235	255	290
K7	150	195	215	235	265	145	185	205	225	250
N1	1025	1350	1500	1625	1825	990	1300	1425	1550	1750
N2	840	1100	1225	1325	1475	800	1050	1150	1250	1400
N3	560	730	810	880	990	530	700	770	840	940
N11	640	840	920	1000	1125	610	800	880	960	1075
S1	65	85	90	100	110	60	80	85	95	105
S2	50	70	75	80	90	49	65	70	75	85
S3	44	60	65	70	80	42	55	60	65	75
S11	90	120	130	140	160	85	115	125	135	150
S12	50	70	75	80	90	49	65	70	80	85
S13	41	55	60	65	70	39	50	55	60	70
H5	55	70	75	85	95	50	65	75	80	90
H8	55	70	80	85	95	50	70	75	80	90
H11	70	90	100	105	120	65	85	95	100	115
H12	110	145	160	170	195	105	135	150	165	185
H21	55	70	80	85	95	50	70	75	80	90

MM06 Z2-Copy – Insert selection – Roughing

SMG		a_p	f_z			
			100%	40%	20%	10%
P1	MM06-06006-B90S-E02 F30M	2,5	0,020	0,020	0,024	0,034
P2	MM06-06006-B90S-E02 F30M	2,5	0,020	0,020	0,026	0,034
P3	MM06-06006-B90S-E02 F30M	2,5	0,019	0,020	0,024	0,032
P4	MM06-06006-B90-MD02 F30M	2,5	0,019	0,019	0,024	0,032
P5	MM06-06006-B90-MD02 F30M	2,5	0,018	0,019	0,024	0,030
P6	MM06-06006-B90-MD02 F30M	2,5	0,018	0,019	0,022	0,030
P7	MM06-06006-B90-MD02 F30M	2,5	0,018	0,019	0,022	0,030
P8	MM06-06006-B90-MD02 F30M	2,5	0,019	0,020	0,024	0,032
P11	MM06-06006-B90-MD02 F30M	2,5	0,018	0,019	0,022	0,030
M1	MM06-06006-B90S-E02 F30M	2,5	0,020	0,020	0,026	0,034
M2	MM06-06006-B90S-E02 F30M	2,5	0,018	0,019	0,024	0,030
M3	MM06-06006-B90S-E02 F30M	2,0	0,015	0,015	0,018	0,024
M4	MM06-06006-B90-MD02 F30M	1,6	0,013	0,013	0,016	0,022
M5	MM06-06006-B90-MD02 F30M	1,6	0,013	0,013	0,016	0,022
K1	MM06-06006-B90S-E02 F30M	2,5	0,020	0,020	0,026	0,034
K2	MM06-06006-B90S-E02 F30M	2,5	0,018	0,019	0,024	0,030
K3	MM06-06006-B90S-E02 F30M	2,5	0,018	0,019	0,024	0,030
K4	MM06-06006-B90S-E02 F30M	2,5	0,018	0,019	0,024	0,030
K5	MM06-06006-B90S-E02 F30M	2,5	0,017	0,017	0,020	0,028
K6	MM06-06006-B90-MD02 F30M	2,5	0,018	0,019	0,024	0,030
K7	MM06-06006-B90-MD02 F30M	2,5	0,017	0,017	0,020	0,028
N1	MM06-06006-B90S-E02 F30M	2,5	0,026	0,026	0,032	0,044
N2	MM06-06006-B90S-E02 F30M	2,5	0,026	0,026	0,032	0,044
N3	MM06-06006-B90S-E02 F30M	2,5	0,026	0,026	0,032	0,044
N11	MM06-06006-B90S-E02 F30M	2,5	0,026	0,026	0,032	0,044
S1	MM06-06006-B90-MD02 F30M	1,6	0,013	0,013	0,016	0,022
S2	MM06-06006-B90-MD02 F30M	1,6	0,013	0,013	0,016	0,022
S3	MM06-06006-B90-MD02 F30M	1,6	0,012	0,012	0,015	0,020
S11	MM06-06006-B90-MD02 F30M	1,8	0,015	0,015	0,018	0,024
S12	MM06-06006-B90-MD02 F30M	1,8	0,015	0,015	0,018	0,024
S13	MM06-06006-B90-MD02 F30M	1,6	0,013	0,013	0,016	0,022
H5	MM06-06006-B90-MD02 F30M	2,0	0,013	0,013	0,016	0,020
H8	MM06-06006-B90-MD02 F30M	1,8	0,0095	0,010	0,012	0,016
H11	MM06-06006-B90-MD02 F30M	2,0	0,013	0,013	0,016	0,020
H12	MM06-06006-B90-MD02 F30M	2,0	0,013	0,013	0,016	0,020
H21	MM06-06006-B90-MD02 F30M	1,8	0,0095	0,010	0,012	0,016

SMG = Seco material group
f_z = mm/tooth
v_c= m/min
a_e/D_c = %
All cutting data are start values

MM06 Z2-Copy – Insert selection – Finishing

SMG		a_p	f_z			
			15%	10%	5%	2%
P1	MM06-06006-B90PF-M01 F15M	2,5	0,028	0,034	0,046	0,075
P2	MM06-06006-B90PF-M01 F15M	2,5	0,028	0,034	0,048	0,075
P3	MM06-06006-B90PF-M01 F15M	2,5	0,026	0,032	0,044	0,070
P4	MM06-06006-B90PF-M01 F15M	2,5	0,026	0,032	0,044	0,070
P5	MM06-06006-B90PF-M01 F15M	2,5	0,026	0,030	0,042	0,070
P6	MM06-06006-B90PF-M01 F15M	2,5	0,026	0,030	0,042	0,070
P7	MM06-06006-B90PF-M01 F15M	2,5	0,026	0,030	0,042	0,070
P8	MM06-06006-B90PF-M01 F15M	2,5	0,026	0,032	0,044	0,070
P11	MM06-06006-B90PF-M01 F15M	2,5	0,026	0,030	0,042	0,070
M1	MM06-06006-B90PF-M01 F15M	2,5	0,028	0,034	0,048	0,075
M2	MM06-06006-B90PF-M01 F15M	2,5	0,026	0,030	0,042	0,070
M3	MM06-06006-B90PF-M01 F15M	2,0	0,020	0,024	0,034	0,055
M4	MM06-06006-B90PF-M01 F15M	1,6	0,018	0,022	0,030	0,048
M5	MM06-06006-B90PF-M01 F15M	1,6	0,018	0,022	0,030	0,048
K1	MM06-06006-B90PF-M01 F15M	2,5	0,028	0,034	0,048	0,075
K2	MM06-06006-B90PF-M01 F15M	2,5	0,026	0,030	0,042	0,070
K3	MM06-06006-B90PF-M01 F15M	2,5	0,026	0,030	0,042	0,070
K4	MM06-06006-B90PF-M01 F15M	2,5	0,026	0,030	0,042	0,070
K5	MM06-06006-B90PF-M01 F15M	2,5	0,024	0,028	0,038	0,060
K6	MM06-06006-B90PF-M01 F15M	2,5	0,026	0,030	0,042	0,070
K7	MM06-06006-B90PF-M01 F15M	2,5	0,024	0,028	0,038	0,060
N1	MM06-06006-B90PF-M01 F15M	2,5	0,036	0,044	0,060	0,095
N2	MM06-06006-B90PF-M01 F15M	2,5	0,036	0,044	0,060	0,095
N3	MM06-06006-B90PF-M01 F15M	2,5	0,036	0,044	0,060	0,095
N11	MM06-06006-B90PF-M01 F15M	2,5	0,036	0,044	0,060	0,095
S1	MM06-06006-B90PF-M01 F15M	1,6	0,018	0,022	0,030	0,048
S2	MM06-06006-B90PF-M01 F15M	1,6	0,018	0,022	0,030	0,048
S3	MM06-06006-B90PF-M01 F15M	1,6	0,017	0,020	0,028	0,044
S11	MM06-06006-B90PF-M01 F15M	1,8	0,020	0,024	0,034	0,055
S12	MM06-06006-B90PF-M01 F15M	1,8	0,020	0,024	0,034	0,055
S13	MM06-06006-B90PF-M01 F15M	1,6	0,018	0,022	0,030	0,048
H5	MM06-06006-B90PF-M01 F15M	2,0	0,018	0,020	0,028	0,046
H8	MM06-06006-B90PF-M01 F15M	1,8	0,013	0,016	0,022	0,034
H11	MM06-06006-B90PF-M01 F15M	2,0	0,018	0,020	0,028	0,046
H12	MM06-06006-B90PF-M01 F15M	2,0	0,018	0,020	0,028	0,046
H21	MM06-06006-B90PF-M01 F15M	1,8	0,013	0,016	0,022	0,034

SMG = Seco material group
f_z = mm/tooth
v_c= m/min
a_e/D_c = %
All cutting data are start values

MM06 Z2-Copy_ – Insert selection – Semi finishing

SMG		a_p	f_z			
			15%	10%	5%	2%
P1	MM06-06006-B90P-M02 F30M	2,5	0,028	0,034	0,046	0,075
P2	MM06-06006-B90P-M02 F30M	2,5	0,028	0,034	0,048	0,075
P3	MM06-06006-B90P-M02 F30M	2,5	0,026	0,032	0,044	0,070
P4	MM06-06006-B90P-M02 F30M	2,5	0,026	0,032	0,044	0,070
P5	MM06-06006-B90P-M02 F30M	2,5	0,026	0,030	0,042	0,070
P6	MM06-06006-B90P-M02 F30M	2,5	0,026	0,030	0,042	0,070
P7	MM06-06006-B90P-M02 F30M	2,5	0,026	0,030	0,042	0,070
P8	MM06-06006-B90P-M02 F30M	2,5	0,026	0,032	0,044	0,070
P11	MM06-06006-B90P-M02 F30M	2,5	0,026	0,030	0,042	0,070
M1	MM06-06006-B90P-M02 F30M	2,5	0,028	0,034	0,048	0,075
M2	MM06-06006-B90P-M02 F30M	2,5	0,026	0,030	0,042	0,070
M3	MM06-06006-B90P-M02 F30M	2,0	0,020	0,024	0,034	0,055
M4	MM06-06006-B90P-M02 F30M	1,6	0,018	0,022	0,030	0,048
M5	MM06-06006-B90P-M02 F30M	1,6	0,018	0,022	0,030	0,048
K1	MM06-06006-B90P-M02 F30M	2,5	0,028	0,034	0,048	0,075
K2	MM06-06006-B90P-M02 F30M	2,5	0,026	0,030	0,042	0,070
K3	MM06-06006-B90P-M02 F30M	2,5	0,026	0,030	0,042	0,070
K4	MM06-06006-B90P-M02 F30M	2,5	0,026	0,030	0,042	0,070
K5	MM06-06006-B90P-M02 F30M	2,5	0,024	0,028	0,038	0,060
K6	MM06-06006-B90P-M02 F30M	2,5	0,026	0,030	0,042	0,070
K7	MM06-06006-B90P-M02 F30M	2,5	0,024	0,028	0,038	0,060
N1	MM06-06006-B90P-M02 F30M	2,5	0,036	0,044	0,060	0,095
N2	MM06-06006-B90P-M02 F30M	2,5	0,036	0,044	0,060	0,095
N3	MM06-06006-B90P-M02 F30M	2,5	0,036	0,044	0,060	0,095
N11	MM06-06006-B90P-M02 F30M	2,5	0,036	0,044	0,060	0,095
S1	MM06-06006-B90P-M02 F30M	1,6	0,018	0,022	0,030	0,048
S2	MM06-06006-B90P-M02 F30M	1,6	0,018	0,022	0,030	0,048
S3	MM06-06006-B90P-M02 F30M	1,6	0,017	0,020	0,028	0,044
S11	MM06-06006-B90P-M02 F30M	1,8	0,020	0,024	0,034	0,055
S12	MM06-06006-B90P-M02 F30M	1,8	0,020	0,024	0,034	0,055
S13	MM06-06006-B90P-M02 F30M	1,6	0,018	0,022	0,030	0,048
H5	MM06-06006-B90P-M02 F30M	2,0	0,018	0,020	0,028	0,046
H8	MM06-06006-B90P-M02 F30M	1,8	0,013	0,016	0,022	0,034
H11	MM06-06006-B90P-M02 F30M	2,0	0,018	0,020	0,028	0,046
H12	MM06-06006-B90P-M02 F30M	2,0	0,018	0,020	0,028	0,046
H21	MM06-06006-B90P-M02 F30M	1,8	0,013	0,016	0,022	0,034

SMG = Seco material group
f_z = mm/tooth
v_c= m/min
a_e/D_c = %
All cutting data are start values

MM06 Z2-Copy – Cutting data

	F15M					F30M					T60M				
SMG	100%	20%	10%	5%	2%	100%	20%	10%	5%	2%	100%	20%	10%	5%	2%
P1	200	265	275	300	455	385	500	560	610	690	315	410	450	495	560
P2	195	250	260	295	440	380	490	540	590	660	305	400	440	480	540
P3	170	220	235	250	380	325	425	470	510	580	265	345	380	415	465
P4	155	195	205	220	335	285	375	415	450	510	235	305	335	365	410
P5	145	190	200	210	320	275	360	395	430	485	220	290	320	350	395
P6	165	215	225	240	360	310	405	445	485	550	250	325	360	395	440
P7	155	205	210	225	340	290	380	420	460	520	235	310	340	370	415
P8	145	185	195	210	320	275	360	395	430	485	220	290	320	350	390
P11	150	195	205	220	330	280	370	405	445	500	230	300	330	360	405
M1	160	200	210	235	355	305	395	440	480	540	245	320	355	390	435
M2	130	170	180	190	290	245	325	355	390	440	200	260	290	315	355
M3	110	145	150	145	220	190	250	275	300	340	155	205	225	245	275
M4	85	120	120	115	165	145	190	205	225	255	115	155	170	185	205
M5	70	100	100	95	135	120	160	175	190	210	95	130	140	155	170
K1	155	200	205	230	350	300	390	430	470	530	240	315	350	380	425
K2	140	180	190	200	305	260	340	375	410	460	210	275	305	330	375
K3	115	155	160	170	255	220	290	320	345	390	180	235	255	280	315
K4	110	145	155	160	245	210	275	305	330	375	170	225	245	270	300
K5	70	90	95	95	145	125	165	180	200	225	100	135	145	160	180
K6	100	130	135	145	215	185	240	265	290	330	150	195	215	235	265
K7	90	115	120	125	185	160	210	230	255	285	130	170	190	205	230
N1	560	720	680	920	1375	1150	1500	1650	1825	2025	930	1225	1350	1475	1650
N2	450	590	550	740	1125	930	1225	1350	1475	1650	750	990	1075	1200	1325
N3	300	390	365	495	750	620	810	890	980	1100	500	660	720	790	890
N11	340	445	420	560	850	710	930	1025	1125	1250	570	750	830	910	1000
S1	39	55	55	55	75	65	90	95	105	120	55	70	80	85	95
S2	32	46	45	44	60	55	70	80	85	95	44	60	65	70	80
S3	28	41	40	39	55	47	60	70	75	85	38	50	55	60	65
S11	55	75	75	75	110	95	125	140	150	170	80	105	115	125	140
S12	31	44	44	42	65	55	75	80	90	100	45	60	65	70	80
S13	25	37	36	35	50	44	55	65	70	75	35	46	50	55	60
H5	33	45	46	47	65	55	75	80	90	100	—	—	—	—	—
H8	36	50	50	55	65	55	75	80	90	100	—	—	—	—	—
H11	43	55	60	60	80	70	95	105	115	125	—	—	—	—	—
H12	70	95	95	95	130	115	150	165	185	205	—	—	—	—	—
H21	36	50	50	55	65	55	75	80	90	100	—	—	—	—	—

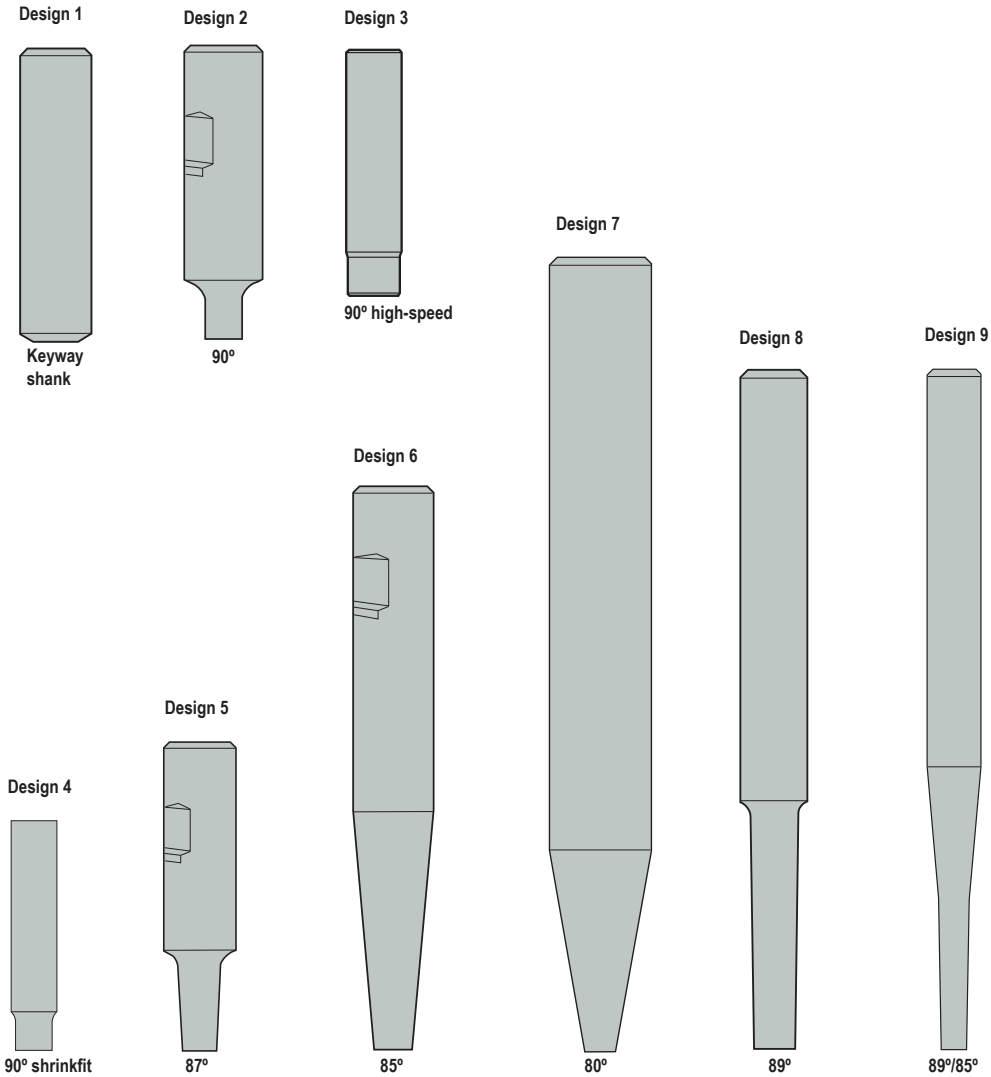
Design 1
Keyway shank
Design 2
90º
Design 3
90º high-speed
Design 7
80º
Design 8
89º
Design 9
89º/85º
Design 6
85º
Design 5
87º
Design 4
90º shrinkfit

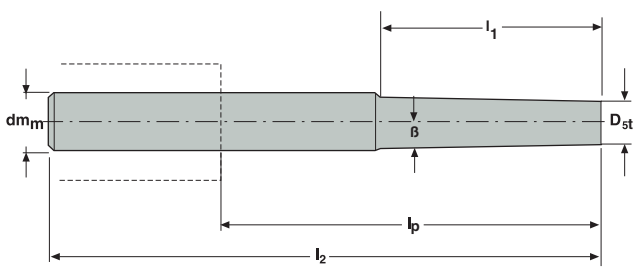
l1
dmm
ß
D5t
lp
l2

MM08

Design	Part No.	Connecting size	Dimensions in mm						KG	Spare part no.
			D_{5t}	dm_m	β°	l_1	l_2	l_p		
1	MM08- 12065.0-0000	MM08	7,6	12	60	0	65	20	0,1	1
3	MM08- 10040.0-0007	MM08	7,6	10	0	7	40	7	0,1	2
4	MM08- 10050.0-0007DS	MM08	7,6	10	0	7	50	10	0,1	3
2	MM08- 16070.3-0007	MM08	7,6	16	0	7,6	70	22	0,1	1
2	16085.0-0016DS	MM08	7,6	16	0	16	85	37	0,3	3
2	16100.0-0032DS	MM08	7,6	16	0	32	100	52	0,3	3
5	MM08- 16075.3-3012	MM08	7,6	16	3	12	75	27	0,1	1
5	10080.0-3023DS	MM08	7,6	10	3	22,9	80	40	0,1	3
6	MM08- 16120.3-5048M	MM08	7,6	16	5	48	120	72	0,2	1
8	MM08- 16150.0-1030M	MM08	7,6	16	1	30	150	102	0,2	5
8	12100.0-1035DS	MM08	7,6	12	1	35	100	55	0,2	2
8	12120.0-1050DS	MM08	7,6	12	1	50	120	75	0,2	2
8	16150.0-1050M	MM08	7,6	16	1	50	150	102	0,2	6
8	16150.0-1050DS	MM08	7,6	16	1	50	150	102	0,4	3
8	16150.0-1070M	MM08	7,6	16	1	70	150	102	0,2	6
8	16150.0-1070DS	MM08	7,6	16	1	70	150	102	0,3	3
9*	MM08- 20250.0-1050DS	MM08	7,6	20	1	50	250	200	1,0	3

*For design 9, the l_1 value is valid on the 89° tapered part

Spare Parts

Spare part no.	Tension screw	Sleeve
		–
1		–
2		–
3		–
5		–
6		–

Please check availability in current price and stock-list.
Allen key H05-4 for sleeve to be ordered separately.

For wrench types, see insert pages

Slot milling/ square shoulder milling

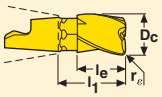

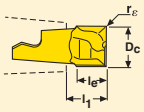

Insert type	Part No.	Dimensions in mm D_c	r_ε	l_e	l_1	Z_c*	Wrench	Coated Grades T60M	F15M	F30M	F40M
3-flute	MM08 -08009-A30-E03	8	0	10	13	3	MM0416			■	
3-flute	-08009-R05A30-M03	8	0,5	10	13	3	MM0416				■
3-flute	-08009-R10A30-D03	8	1,0	10	13	3	MM0416			■	
3-flute	-08009-R10A30-E03	8	1,0	10	13	3	MM0416			■	
3-flute	-08009-R10A30-M03	8	1,0	10	13	3	MM0416				■
3-flute	-08009-R20A30-M03	8	2,0	10	13	3	MM0416				■
3-flute	-08009-R30A30-M03	8	3,0	10	13	3	MM0416				■
2-flute	MM08 -08005-M03	8	0	5,5	6,8	2	MM0612	■			
2-flute	-08005-R04-MD03	8	0,4	5,5	6,79	2	MM0612	■		■	
2-flute	-08005-R04P-M02	8	0,4	5,4	6,71	2	MM0612			■	
2-flute	-08005-R10-MD03	8	1,0	5,48	6,78	2	MM0612			■	
2-flute	MM08 -08005-R04A8-E03	8	0,4	5,4	6,71	2	MM0612	■		■	
2-flute	-08005-R30A8-E03	8	3,0	5,3	6,65	2	MM0612			■	
Keyway 3-flute	MM08 -07809-R02A30-M03	7,8	0,2	10	13	3	MM0416				■
Keyway 2-flute	MM08 -07805T-R02-D03	7,8	0,2	5,49	6,79	2	MM0612	■			

*Effective number of flutes

For Torque keys and torque values, see page

Centre drilling

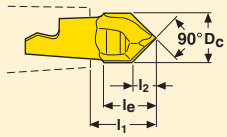

Insert type	Part No.	Dimensions in mm D_c	l_e	l_1	l_2	Z_c*	Wrench	Coated Grades T60M	F15M	F30M	F40M	
90°	MM08 -08004-C90-M03	8	8	9,50	3,79	2	MM0612	■				
120°	MM08 -08006-C120-M03	8	8,32	9,46	2,15	2	MM0612	■				

Chamfering

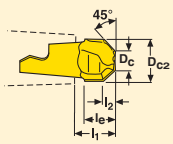

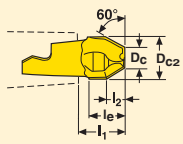

Insert type	Part No.	Dimensions in mm D_c	D_{c2}	l_e	l_1	l_2	Z_c*	Wrench	Coated Grades T60M	F15M	F30M	F40M	
45°	MM08 -08005-4520-E03	3,87	8,0	5,5	6,7	2,00	2	MM0612	■				
60°	MM08 -08006-6030-E03	4,19	8,0	6,45	7,66	3,30	2	MM0612	■				

*Effective number of flutes
For Torque keys and torque values, see page

Plunge milling

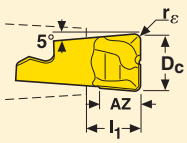

Insert type	Part No.	Dimensions in mm				Zc*	Wrench	Coated				
								Grades				
		Dc	rε	AZ	l1			T60M	F15M	F30M	F40M	
2-flute	MM08 -08005-R10-PL-MD03	8	1,0	5,7	6,78	2	MM0612			■		

*Effective number of flutes
For Torque keys and torque values, see page

Precision inserts for semi-finishing in all materials

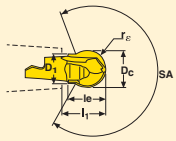

Insert type	Part No.	Dimensions in mm D_c	r_ε	l_e	l_1	D_1	SA°	Z_c*	Wrench	Coated Grades T60M	F15M	F30M	F40M	
2-flute	MM08 -10010-B120PF-M02	10	5,0	10	10,97	8	254,0	2	MM0612		■			
2-flute	-10010-B120P-M04	10	5,0	10	10,97	8	254,0	2	MM0612			■		

Copy milling

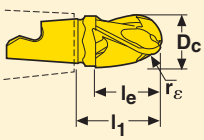

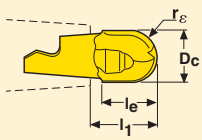

Insert type	Part No.	Dimensions in mm D_c	r_ε	l_e	l_1	Z_c*	Wrench	Coated Grades T60M	F15M	F30M	F40M	
3-flute	MM08 -08009-B90A30-E03	8	4,0	10	13	3	MM0416			■		
3-flute	-08009-B90A30-M03	8	4,0	10	13	3	MM0416				■	
3-flute	-08009-B90A30-D03	8	4,0	10	13	3	MM0416			■		
2-flute	MM08 -08008-B90-MD03	8	4,0	8,19	9,42	2	MM0612	■		■		
2-flute	-08008-B90S-E03	8	4,0	8,19	9,42	2	MM0612			■		
2-flute	-08008-B90P-M03	8	4,0	6,98	9,39	2	MM0612			■		
2-flute	-08008-B90PF-M01	8	4,0	6,98	9,39	2	MM0612		■			

*Effective number of flutes
For Torque keys and torque values, see page

High feed

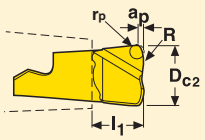

Insert type	Part No.	Dimensions in mm					Z_c*	Wrench	Coated				
									Grades				
		a_p	D_{c2}	r_p	R	l_1			T60M	F15M	F30M	F40M	
2-flute	**MM08 -08.40-HF-MD06**	0,37	8	0,88	4	6,84	2	MM0612			■		

*Effective number of flutes
For Torque keys and torque values, see page

MM08 – General Insert selection

SMG		a_p	f_z			
			100%	40%	20%	10%
P1	MM08-08009-R05A30-M03 F40M	1,8	0,044	0,044	0,055	0,075
P2	MM08-08009-R05A30-M03 F40M	1,8	0,044	0,046	0,055	0,075
P3	MM08-08009-R05A30-M03 F40M	1,8	0,042	0,042	0,055	0,070
P4	MM08-08009-R05A30-M03 F40M	1,8	0,042	0,042	0,050	0,070
P5	MM08-08009-R05A30-M03 F40M	1,8	0,040	0,042	0,050	0,070
P6	MM08-08009-R05A30-M03 F40M	1,8	0,040	0,040	0,050	0,065
P7	MM08-08009-R05A30-M03 F40M	1,8	0,040	0,040	0,050	0,065
P8	MM08-08009-R05A30-M03 F40M	1,8	0,042	0,042	0,055	0,070
P11	MM08-08009-R05A30-M03 F40M	1,8	0,040	0,040	0,050	0,065
M1	MM08-08009-R05A30-M03 F40M	1,8	0,044	0,046	0,055	0,075
M2	MM08-08009-R05A30-M03 F40M	1,8	0,040	0,042	0,050	0,070
M3	MM08-08009-R05A30-M03 F40M	1,4	0,034	0,034	0,042	0,055
M4	MM08-08009-R05A30-M03 F40M	1,0	0,030	0,032	0,038	0,050
M5	MM08-08009-R05A30-M03 F40M	1,0	0,030	0,032	0,038	0,050
K1	MM08-08009-R10A30-E03 F30M	1,8	0,050	0,050	0,060	0,085
K2	MM08-08009-R10A30-E03 F30M	1,8	0,044	0,046	0,055	0,075
K3	MM08-08009-R10A30-E03 F30M	1,8	0,044	0,046	0,055	0,075
K4	MM08-08009-R10A30-E03 F30M	1,8	0,044	0,046	0,055	0,075
K5	MM08-08009-R10A30-D03 F30M	1,8	0,040	0,040	0,050	0,070
K6	MM08-08009-R10A30-D03 F30M	1,8	0,044	0,046	0,055	0,075
K7	MM08-08009-R10A30-D03 F30M	1,8	0,040	0,040	0,050	0,070
N1	MM08-08009-R10A30-E03 F30M	1,8	0,060	0,065	0,080	0,11
N2	MM08-08009-R10A30-E03 F30M	1,8	0,060	0,065	0,080	0,11
N3	MM08-08009-R10A30-E03 F30M	1,8	0,060	0,065	0,080	0,11
N11	MM08-08009-R10A30-E03 F30M	1,8	0,060	0,065	0,080	0,11
S1	MM08-08009-R10A30-D03 F30M	1,0	0,038	0,040	0,048	0,065
S2	MM08-08009-R10A30-D03 F30M	1,0	0,038	0,040	0,048	0,065
S3	MM08-08009-R10A30-D03 F30M	1,0	0,036	0,036	0,044	0,060
S11	MM08-08009-R05A30-M03 F40M	1,3	0,034	0,034	0,042	0,055
S12	MM08-08009-R05A30-M03 F40M	1,3	0,034	0,034	0,042	0,055
S13	MM08-08009-R05A30-M03 F40M	1,0	0,030	0,032	0,038	0,050
H5	MM08-08009-R10A30-E03 F30M	1,4	0,032	0,034	0,040	0,055
H8	MM08-08009-R10A30-E03 F30M	1,3	0,026	0,026	0,032	0,042
H11	MM08-08009-R10A30-E03 F30M	1,4	0,032	0,034	0,040	0,055
H12	MM08-08009-R10A30-E03 F30M	1,4	0,032	0,034	0,040	0,055
H21	MM08-08009-R10A30-E03 F30M	1,3	0,026	0,026	0,032	0,042

SMG = Seco material group
f_z = mm/tooth
v_c= m/min
a_e/D_c = %
All cutting data are start values

MM08 – General Cutting data

	F30M				F40M				T60M			
SMG	100%	40%	20%	10%	100%	40%	20%	10%	100%	40%	20%	10%
P1	280	345	390	430	260	320	355	395	210	245	285	315
P2	270	340	380	415	250	310	350	385	205	240	280	305
P3	240	295	330	360	220	275	305	330	175	205	240	265
P4	210	260	290	315	190	240	270	295	160	185	215	235
P5	200	250	280	305	185	230	255	280	150	175	205	225
P6	225	280	310	345	210	260	290	315	170	200	230	255
P7	210	265	295	325	195	245	275	300	160	190	215	240
P8	200	245	280	300	185	230	255	280	150	175	200	225
P11	205	255	285	315	190	240	265	290	155	180	210	235
M1	220	275	305	335	200	250	280	310	165	195	225	245
M2	180	225	250	275	165	210	230	255	135	160	185	205
M3	145	175	200	215	130	165	180	200	110	120	145	160
M4	110	135	150	165	100	125	140	155	85	90	105	125
M5	90	110	125	140	85	105	115	130	70	75	90	105
K1	215	270	300	325	195	245	275	305	160	190	220	240
K2	190	235	265	290	175	220	245	270	145	170	195	215
K3	160	200	225	245	145	185	205	225	120	140	165	180
K4	155	190	215	235	140	175	195	215	115	135	155	175
K5	95	115	130	140	85	105	120	130	70	80	95	105
K6	135	170	190	205	125	155	175	190	100	120	140	155
K7	120	145	165	180	110	135	155	165	90	105	120	135
N1	820	1025	1125	1225	750	940	1050	1150	610	700	830	910
N2	660	820	910	1000	600	760	840	930	490	570	670	740
N3	440	550	610	670	400	510	560	620	325	380	445	490
N11	500	630	700	760	460	580	640	710	375	435	510	560
S1	50	60	70	75	47	60	65	70	39	42	49	60
S2	41	50	55	60	38	47	55	60	31	34	40	47
S3	36	44	49	55	33	41	46	50	27	30	35	41
S11	70	90	100	110	65	85	90	100	55	60	70	80
S12	42	50	60	65	38	48	55	60	32	35	41	47
S13	33	40	46	50	30	38	42	46	25	27	32	37
H5	43	50	60	65	39	49	55	60	—	—	—	—
H8	45	55	60	65	41	50	55	60	—	—	—	—
H11	55	65	75	85	50	65	70	75	—	—	—	—
H12	90	110	120	135	80	100	110	125	—	—	—	—
H21	45	55	60	65	41	50	55	60	—	—	—	—

MM08 Z3 – Copy Insert selection – Roughing

SMG		a_p	f_z			
			100%	40%	20%	10%
P1	MM08-08009-B90A30-M03 F40M	1,8	0,060	0,060	0,075	0,10
P2	MM08-08009-B90A30-M03 F40M	1,8	0,060	0,060	0,075	0,10
P3	MM08-08009-B90A30-M03 F40M	1,8	0,055	0,060	0,070	0,095
P4	MM08-08009-B90A30-M03 F40M	1,8	0,055	0,055	0,070	0,095
P5	MM08-08009-B90A30-M03 F40M	1,8	0,055	0,055	0,070	0,095
P6	MM08-08009-B90A30-M03 F40M	1,8	0,055	0,055	0,070	0,090
P7	MM08-08009-B90A30-M03 F40M	1,8	0,055	0,055	0,070	0,090
P8	MM08-08009-B90A30-M03 F40M	1,8	0,055	0,060	0,070	0,095
P11	MM08-08009-B90A30-M03 F40M	1,8	0,055	0,055	0,070	0,090
M1	MM08-08009-B90A30-M03 F40M	1,8	0,060	0,060	0,075	0,10
M2	MM08-08009-B90A30-M03 F40M	1,8	0,055	0,055	0,070	0,095
M3	MM08-08009-B90A30-M03 F40M	1,4	0,044	0,046	0,055	0,075
M4	MM08-08009-B90A30-M03 F40M	1,0	0,038	0,040	0,048	0,065
M5	MM08-08009-B90A30-M03 F40M	1,0	0,038	0,040	0,048	0,065
K1	MM08-08009-B90A30-E03 F30M	1,8	0,060	0,060	0,075	0,10
K2	MM08-08009-B90A30-E03 F30M	1,8	0,055	0,055	0,070	0,095
K3	MM08-08009-B90A30-E03 F30M	1,8	0,055	0,055	0,070	0,095
K4	MM08-08009-B90A30-E03 F30M	1,8	0,055	0,055	0,070	0,095
K5	MM08-08009-B90A30-D03 F30M	1,8	0,050	0,050	0,060	0,085
K6	MM08-08009-B90A30-D03 F30M	1,8	0,055	0,055	0,070	0,095
K7	MM08-08009-B90A30-D03 F30M	1,8	0,050	0,050	0,060	0,085
N1	MM08-08009-B90A30-E03 F30M	1,8	0,075	0,080	0,095	0,13
N2	MM08-08009-B90A30-E03 F30M	1,8	0,075	0,080	0,095	0,13
N3	MM08-08009-B90A30-E03 F30M	1,8	0,075	0,080	0,095	0,13
N11	MM08-08009-B90A30-E03 F30M	1,8	0,075	0,080	0,095	0,13
S1	MM08-08009-B90A30-D03 F30M	1,0	0,038	0,040	0,048	0,065
S2	MM08-08009-B90A30-D03 F30M	1,0	0,038	0,040	0,048	0,065
S3	MM08-08009-B90A30-D03 F30M	1,0	0,036	0,036	0,044	0,060
S11	MM08-08009-B90A30-M03 F40M	1,3	0,044	0,046	0,055	0,075
S12	MM08-08009-B90A30-M03 F40M	1,3	0,044	0,046	0,055	0,075
S13	MM08-08009-B90A30-M03 F40M	1,0	0,038	0,040	0,048	0,065
H5	MM08-08009-B90A30-D03 F30M	1,4	0,038	0,038	0,048	0,065
H8	MM08-08009-B90A30-D03 F30M	1,3	0,028	0,030	0,036	0,048
H11	MM08-08009-B90A30-D03 F30M	1,4	0,038	0,038	0,048	0,065
H12	MM08-08009-B90A30-D03 F30M	1,4	0,038	0,038	0,048	0,065
H21	MM08-08009-B90A30-D03 F30M	1,3	0,028	0,030	0,036	0,048

SMG = Seco material group
f_z = mm/tooth
v_c= m/min
a_e/D_c = %
All cutting data are start values

MM08 Z3 – Copy Insert selection – Semi finishing

SMG		a_p	f_z			
			15%	10%	5%	2%
P1	MM08-08009-B90A30-E03 F30M	1,8	0,085	0,10	0,14	0,24
P2	MM08-08009-B90A30-E03 F30M	1,8	0,085	0,10	0,14	0,24
P3	MM08-08009-B90A30-E03 F30M	1,8	0,080	0,095	0,14	0,22
P4	MM08-08009-B90A30-E03 F30M	1,8	0,080	0,095	0,13	0,22
P5	MM08-08009-B90A30-E03 F30M	1,8	0,080	0,095	0,13	0,22
P6	MM08-08009-B90A30-E03 F30M	1,8	0,075	0,090	0,13	0,22
P7	MM08-08009-B90A30-E03 F30M	1,8	0,075	0,090	0,13	0,22
P8	MM08-08009-B90A30-E03 F30M	1,8	0,080	0,095	0,14	0,22
P11	MM08-08009-B90A30-E03 F30M	1,8	0,075	0,090	0,13	0,22
M1	MM08-08009-B90A30-E03 F30M	1,8	0,085	0,10	0,14	0,24
M2	MM08-08009-B90A30-E03 F30M	1,8	0,080	0,095	0,13	0,22
M3	MM08-08009-B90A30-E03 F30M	1,4	0,060	0,075	0,10	0,17
M4	MM08-08009-B90A30-E03 F30M	1,0	0,055	0,065	0,090	0,15
M5	MM08-08009-B90A30-E03 F30M	1,0	0,055	0,065	0,090	0,15
K1	MM08-08009-B90A30-E03 F30M	1,8	0,085	0,10	0,14	0,24
K2	MM08-08009-B90A30-E03 F30M	1,8	0,080	0,095	0,13	0,22
K3	MM08-08009-B90A30-E03 F30M	1,8	0,080	0,095	0,13	0,22
K4	MM08-08009-B90A30-E03 F30M	1,8	0,080	0,095	0,13	0,22
K5	MM08-08009-B90A30-E03 F30M	1,8	0,070	0,085	0,12	0,19
K6	MM08-08009-B90A30-E03 F30M	1,8	0,080	0,095	0,13	0,22
K7	MM08-08009-B90A30-E03 F30M	1,8	0,070	0,085	0,12	0,19
N1	MM08-08009-B90A30-E03 F30M	1,8	0,11	0,13	0,19	0,32
N2	MM08-08009-B90A30-E03 F30M	1,8	0,11	0,13	0,19	0,32
N3	MM08-08009-B90A30-E03 F30M	1,8	0,11	0,13	0,19	0,32
N11	MM08-08009-B90A30-E03 F30M	1,8	0,11	0,13	0,19	0,32
S1	MM08-08009-B90A30-E03 F30M	1,0	0,055	0,065	0,090	0,15
S2	MM08-08009-B90A30-E03 F30M	1,0	0,055	0,065	0,090	0,15
S3	MM08-08009-B90A30-D03 F30M	1,0	0,050	0,060	0,085	0,14
S11	MM08-08009-B90A30-E03 F30M	1,3	0,060	0,075	0,10	0,17
S12	MM08-08009-B90A30-E03 F30M	1,3	0,060	0,075	0,10	0,17
S13	MM08-08009-B90A30-E03 F30M	1,0	0,055	0,065	0,090	0,15
H5	MM08-08009-B90A30-E03 F30M	1,4	0,055	0,065	0,090	0,14
H8	MM08-08009-B90A30-E03 F30M	1,3	0,040	0,048	0,065	0,11
H11	MM08-08009-B90A30-E03 F30M	1,4	0,055	0,065	0,090	0,14
H12	MM08-08009-B90A30-E03 F30M	1,4	0,055	0,065	0,090	0,14
H21	MM08-08009-B90A30-E03 F30M	1,3	0,040	0,048	0,065	0,11

SMG = Seco material group
f_z = mm/tooth
v_c= m/min
a_e/D_c = %
All cutting data are start values

MM08 Z3 – Copy Insert selection – Finishing

SMG		a_p	f_z			
			15%	10%	5%	2%
P1	MM08-08009-B90A30-E03 F30M	1,8	0,085	0,10	0,14	0,24
P2	MM08-08009-B90A30-E03 F30M	1,8	0,085	0,10	0,14	0,24
P3	MM08-08009-B90A30-E03 F30M	1,8	0,080	0,095	0,14	0,22
P4	MM08-08009-B90A30-E03 F30M	1,8	0,080	0,095	0,13	0,22
P5	MM08-08009-B90A30-E03 F30M	1,8	0,080	0,095	0,13	0,22
P6	MM08-08009-B90A30-E03 F30M	1,8	0,075	0,090	0,13	0,22
P7	MM08-08009-B90A30-E03 F30M	1,8	0,075	0,090	0,13	0,22
P8	MM08-08009-B90A30-E03 F30M	1,8	0,080	0,095	0,14	0,22
P11	MM08-08009-B90A30-E03 F30M	1,8	0,075	0,090	0,13	0,22
M1	MM08-08009-B90A30-E03 F30M	1,8	0,085	0,10	0,14	0,24
M2	MM08-08009-B90A30-E03 F30M	1,8	0,080	0,095	0,13	0,22
M3	MM08-08009-B90A30-E03 F30M	1,4	0,060	0,075	0,10	0,17
M4	MM08-08009-B90A30-E03 F30M	1,0	0,055	0,065	0,090	0,15
M5	MM08-08009-B90A30-E03 F30M	1,0	0,055	0,065	0,090	0,15
K1	MM08-08009-B90A30-E03 F30M	1,8	0,085	0,10	0,14	0,24
K2	MM08-08009-B90A30-E03 F30M	1,8	0,080	0,095	0,13	0,22
K3	MM08-08009-B90A30-E03 F30M	1,8	0,080	0,095	0,13	0,22
K4	MM08-08009-B90A30-E03 F30M	1,8	0,080	0,095	0,13	0,22
K5	MM08-08009-B90A30-E03 F30M	1,8	0,070	0,085	0,12	0,19
K6	MM08-08009-B90A30-E03 F30M	1,8	0,080	0,095	0,13	0,22
K7	MM08-08009-B90A30-E03 F30M	1,8	0,070	0,085	0,12	0,19
N1	MM08-08009-B90A30-E03 F30M	1,8	0,11	0,13	0,19	0,32
N2	MM08-08009-B90A30-E03 F30M	1,8	0,11	0,13	0,19	0,32
N3	MM08-08009-B90A30-E03 F30M	1,8	0,11	0,13	0,19	0,32
N11	MM08-08009-B90A30-E03 F30M	1,8	0,11	0,13	0,19	0,32
S1	MM08-08009-B90A30-E03 F30M	1,0	0,055	0,065	0,090	0,15
S2	MM08-08009-B90A30-E03 F30M	1,0	0,055	0,065	0,090	0,15
S3	MM08-08009-B90A30-E03 F30M	1,0	0,050	0,060	0,085	0,14
S11	MM08-08009-B90A30-E03 F30M	1,3	0,060	0,075	0,10	0,17
S12	MM08-08009-B90A30-E03 F30M	1,3	0,060	0,075	0,10	0,17
S13	MM08-08009-B90A30-E03 F30M	1,0	0,055	0,065	0,090	0,15
H5	MM08-08009-B90A30-E03 F30M	1,4	0,055	0,065	0,090	0,14
H8	MM08-08009-B90A30-E03 F30M	1,3	0,040	0,048	0,065	0,11
H11	MM08-08009-B90A30-E03 F30M	1,4	0,055	0,065	0,090	0,14
H12	MM08-08009-B90A30-E03 F30M	1,4	0,055	0,065	0,090	0,14
H21	MM08-08009-B90A30-E03 F30M	1,3	0,040	0,048	0,065	0,11

SMG = Seco material group
f_z = mm/tooth
v_c= m/min
a_e/D_c = %
All cutting data are start values

MM08 Z3 – Copy Cutting data

SMG	F30M					F40M				
	100%	20%	10%	5%	2%	100%	20%	10%	5%	2%
P1	330	430	480	530	580	315	410	460	500	550
P2	320	420	465	510	570	305	400	440	480	540
P3	280	365	405	440	495	265	350	385	420	470
P4	245	325	360	390	435	235	310	340	370	415
P5	235	310	345	370	420	225	295	325	355	400
P6	265	345	385	425	470	255	330	365	405	450
P7	250	325	365	400	445	240	310	345	380	425
P8	235	310	340	370	415	225	295	325	355	395
P11	245	320	355	390	430	235	305	335	370	410
M1	260	340	375	410	455	245	325	355	390	435
M2	215	280	310	335	375	205	265	295	320	360
M3	170	220	245	265	295	160	210	230	255	280
M4	130	175	185	205	225	120	165	175	195	215
M5	105	145	155	170	190	100	140	145	160	180
K1	255	335	365	400	450	240	320	350	380	430
K2	225	295	325	355	395	215	280	310	335	380
K3	190	250	275	300	335	180	235	260	285	320
K4	180	235	265	285	320	175	225	250	270	305
K5	110	145	160	175	195	105	135	150	165	185
K6	160	210	230	250	285	155	200	220	240	270
K7	140	185	205	225	250	135	175	195	210	240
N1	960	1250	1375	1525	1675	910	1200	1325	1450	1600
N2	770	1025	1125	1225	1350	740	970	1075	1175	1275
N3	510	680	740	820	900	490	650	710	780	860
N11	590	770	850	940	1025	560	740	810	890	980
S1	60	80	85	95	105	55	80	80	90	100
S2	48	65	70	75	85	46	60	65	75	80
S3	42	55	60	65	75	40	55	60	65	70
S11	85	115	125	135	150	80	110	115	130	145
S12	49	65	70	80	85	47	65	70	75	80
S13	39	55	55	60	70	37	50	55	60	65
H5	50	65	75	80	90	48	65	70	75	85
H8	50	70	75	80	90	49	65	70	80	90
H11	65	85	95	100	115	60	80	90	95	110
H12	105	135	150	165	185	100	130	145	155	175
H21	50	70	75	80	90	49	65	70	80	90

MM08 Z2 – Copy Insert selection – Roughing

SMG		a_p	f_z 100%	40%	20%	10%
P1	MM08-08008-B90S-E03 F30M	3,5	0,060	0,060	0,075	0,10
P2	MM08-08008-B90S-E03 F30M	3,5	0,060	0,060	0,075	0,10
P3	MM08-08008-B90S-E03 F30M	3,5	0,055	0,060	0,070	0,095
P4	MM08-08008-B90-MD03 F30M	3,5	0,055	0,055	0,070	0,095
P5	MM08-08008-B90-MD03 F30M	3,5	0,055	0,055	0,070	0,095
P6	MM08-08008-B90-MD03 F30M	3,5	0,055	0,055	0,070	0,090
P7	MM08-08008-B90-MD03 F30M	3,5	0,055	0,055	0,070	0,090
P8	MM08-08008-B90-MD03 F30M	3,5	0,055	0,060	0,070	0,095
P11	MM08-08008-B90-MD03 F30M	3,5	0,055	0,055	0,070	0,090
M1	MM08-08008-B90S-E03 F30M	3,5	0,060	0,060	0,075	0,10
M2	MM08-08008-B90S-E03 F30M	3,5	0,055	0,055	0,070	0,095
M3	MM08-08008-B90S-E03 F30M	2,5	0,044	0,046	0,055	0,075
M4	MM08-08008-B90-MD03 F30M	2,0	0,038	0,040	0,048	0,065
M5	MM08-08008-B90-MD03 F30M	2,0	0,038	0,040	0,048	0,065
K1	MM08-08008-B90S-E03 F30M	3,5	0,060	0,060	0,075	0,10
K2	MM08-08008-B90S-E03 F30M	3,5	0,055	0,055	0,070	0,095
K3	MM08-08008-B90S-E03 F30M	3,5	0,055	0,055	0,070	0,095
K4	MM08-08008-B90S-E03 F30M	3,5	0,055	0,055	0,070	0,095
K5	MM08-08008-B90-MD03 F30M	3,5	0,050	0,050	0,060	0,085
K6	MM08-08008-B90-MD03 F30M	3,5	0,055	0,055	0,070	0,095
K7	MM08-08008-B90-MD03 F30M	3,5	0,050	0,050	0,060	0,085
N1	MM08-08008-B90S-E03 F30M	3,5	0,075	0,080	0,095	0,13
N2	MM08-08008-B90S-E03 F30M	3,5	0,075	0,080	0,095	0,13
N3	MM08-08008-B90S-E03 F30M	3,5	0,075	0,080	0,095	0,13
N11	MM08-08008-B90S-E03 F30M	3,5	0,075	0,080	0,095	0,13
S1	MM08-08008-B90-MD03 F30M	2,0	0,038	0,040	0,048	0,065
S2	MM08-08008-B90-MD03 F30M	2,0	0,038	0,040	0,048	0,065
S3	MM08-08008-B90-MD03 F30M	2,0	0,036	0,036	0,044	0,060
S11	MM08-08008-B90-MD03 F30M	2,5	0,044	0,046	0,055	0,075
S12	MM08-08008-B90-MD03 F30M	2,5	0,044	0,046	0,055	0,075
S13	MM08-08008-B90-MD03 F30M	2,0	0,038	0,040	0,048	0,065
H5	MM08-08008-B90-MD03 F30M	2,5	0,038	0,038	0,048	0,065
H8	MM08-08008-B90-MD03 F30M	2,5	0,028	0,030	0,036	0,048
H11	MM08-08008-B90-MD03 F30M	2,5	0,038	0,038	0,048	0,065
H12	MM08-08008-B90-MD03 F30M	2,5	0,038	0,038	0,048	0,065
H21	MM08-08008-B90-MD03 F30M	2,5	0,028	0,030	0,036	0,048

SMG = Seco material group
f_z = mm/tooth
v_c= m/min
a_e/D_c = %
All cutting data are start values

MM08 Z2 – Copy Insert selection – Semi finishing

SMG		a_p	f_z			
			15%	10%	5%	2%
P1	MM08-08008-B90P-M03 F30M	3,5	0,085	0,10	0,14	0,24
P2	MM08-08008-B90P-M03 F30M	3,5	0,085	0,10	0,14	0,24
P3	MM08-08008-B90P-M03 F30M	3,5	0,080	0,095	0,14	0,22
P4	MM08-08008-B90P-M03 F30M	3,5	0,080	0,095	0,13	0,22
P5	MM08-08008-B90P-M03 F30M	3,5	0,080	0,095	0,13	0,22
P6	MM08-08008-B90P-M03 F30M	3,5	0,075	0,090	0,13	0,22
P7	MM08-08008-B90P-M03 F30M	3,5	0,075	0,090	0,13	0,22
P8	MM08-08008-B90P-M03 F30M	3,5	0,080	0,095	0,14	0,22
P11	MM08-08008-B90P-M03 F30M	3,5	0,075	0,090	0,13	0,22
M1	MM08-08008-B90P-M03 F30M	3,5	0,085	0,10	0,14	0,24
M2	MM08-08008-B90P-M03 F30M	3,5	0,080	0,095	0,13	0,22
M3	MM08-08008-B90P-M03 F30M	2,5	0,060	0,075	0,10	0,17
M4	MM08-08008-B90P-M03 F30M	2,0	0,055	0,065	0,090	0,15
M5	MM08-08008-B90P-M03 F30M	2,0	0,055	0,065	0,090	0,15
K1	MM08-08008-B90P-M03 F30M	3,5	0,085	0,10	0,14	0,24
K2	MM08-08008-B90P-M03 F30M	3,5	0,080	0,095	0,13	0,22
K3	MM08-08008-B90P-M03 F30M	3,5	0,080	0,095	0,13	0,22
K4	MM08-08008-B90P-M03 F30M	3,5	0,080	0,095	0,13	0,22
K5	MM08-08008-B90P-M03 F30M	3,5	0,070	0,085	0,12	0,19
K6	MM08-08008-B90P-M03 F30M	3,5	0,080	0,095	0,13	0,22
K7	MM08-08008-B90P-M03 F30M	3,5	0,070	0,085	0,12	0,19
N1	MM08-08008-B90P-M03 F30M	3,5	0,11	0,13	0,19	0,32
N2	MM08-08008-B90P-M03 F30M	3,5	0,11	0,13	0,19	0,32
N3	MM08-08008-B90P-M03 F30M	3,5	0,11	0,13	0,19	0,32
N11	MM08-08008-B90P-M03 F30M	3,5	0,11	0,13	0,19	0,32
S1	MM08-08008-B90P-M03 F30M	2,0	0,055	0,065	0,090	0,15
S2	MM08-08008-B90P-M03 F30M	2,0	0,055	0,065	0,090	0,15
S3	MM08-08008-B90P-M03 F30M	2,0	0,050	0,060	0,085	0,14
S11	MM08-08008-B90P-M03 F30M	2,5	0,060	0,075	0,10	0,17
S12	MM08-08008-B90P-M03 F30M	2,5	0,060	0,075	0,10	0,17
S13	MM08-08008-B90P-M03 F30M	2,0	0,055	0,065	0,090	0,15
H5	MM08-08008-B90P-M03 F30M	2,5	0,055	0,065	0,090	0,14
H8	MM08-08008-B90P-M03 F30M	2,5	0,040	0,048	0,065	0,11
H11	MM08-08008-B90P-M03 F30M	2,5	0,055	0,065	0,090	0,14
H12	MM08-08008-B90P-M03 F30M	2,5	0,055	0,065	0,090	0,14
H21	MM08-08008-B90P-M03 F30M	2,5	0,040	0,048	0,065	0,11

SMG = Seco material group
f_z = mm/tooth
v_c= m/min
a_e/D_c = %
All cutting data are start values

MM08 Z2 – Copy Insert selection – Finishing

SMG		a_p	f_z			
			15%	10%	5%	2%
P1	MM08-08008-B90PF-M01 F15M	3,5	0,028	0,034	0,046	0,075
P2	MM08-08008-B90PF-M01 F15M	3,5	0,028	0,034	0,046	0,075
P3	MM08-08008-B90PF-M01 F15M	3,5	0,026	0,032	0,044	0,070
P4	MM08-08008-B90PF-M01 F15M	3,5	0,026	0,032	0,044	0,070
P5	MM08-08008-B90PF-M01 F15M	3,5	0,026	0,030	0,042	0,070
P6	MM08-08008-B90PF-M01 F15M	3,5	0,026	0,030	0,042	0,065
P7	MM08-08008-B90PF-M01 F15M	3,5	0,026	0,030	0,042	0,065
P8	MM08-08008-B90PF-M01 F15M	3,5	0,026	0,032	0,044	0,070
P11	MM08-08008-B90PF-M01 F15M	3,5	0,026	0,030	0,042	0,065
M1	MM08-08008-B90PF-M01 F15M	3,5	0,028	0,034	0,046	0,075
M2	MM08-08008-B90PF-M01 F15M	3,5	0,026	0,030	0,042	0,070
M3	MM08-08008-B90PF-M01 F15M	2,5	0,020	0,024	0,034	0,055
M4	MM08-08008-B90PF-M01 F15M	2,0	0,018	0,022	0,030	0,046
M5	MM08-08008-B90PF-M01 F15M	2,0	0,018	0,022	0,030	0,046
K1	MM08-08008-B90PF-M01 F15M	3,5	0,028	0,034	0,046	0,075
K2	MM08-08008-B90PF-M01 F15M	3,5	0,026	0,030	0,042	0,070
K3	MM08-08008-B90PF-M01 F15M	3,5	0,026	0,030	0,042	0,070
K4	MM08-08008-B90PF-M01 F15M	3,5	0,026	0,030	0,042	0,070
K5	MM08-08008-B90PF-M01 F15M	3,5	0,024	0,028	0,038	0,060
K6	MM08-08008-B90PF-M01 F15M	3,5	0,026	0,030	0,042	0,070
K7	MM08-08008-B90PF-M01 F15M	3,5	0,024	0,028	0,038	0,060
N1	MM08-08008-B90PF-M01 F15M	3,5	0,036	0,044	0,060	0,095
N2	MM08-08008-B90PF-M01 F15M	3,5	0,036	0,044	0,060	0,095
N3	MM08-08008-B90PF-M01 F15M	3,5	0,036	0,044	0,060	0,095
N11	MM08-08008-B90PF-M01 F15M	3,5	0,036	0,044	0,060	0,095
S1	MM08-08008-B90PF-M01 F15M	2,0	0,018	0,022	0,030	0,046
S2	MM08-08008-B90PF-M01 F15M	2,0	0,018	0,022	0,030	0,046
S3	MM08-08008-B90PF-M01 F15M	2,0	0,017	0,020	0,028	0,044
S11	MM08-08008-B90PF-M01 F15M	2,5	0,020	0,024	0,034	0,055
S12	MM08-08008-B90PF-M01 F15M	2,5	0,020	0,024	0,034	0,055
S13	MM08-08008-B90PF-M01 F15M	2,0	0,018	0,022	0,030	0,046
H5	MM08-08008-B90PF-M01 F15M	2,5	0,018	0,020	0,028	0,046
H8	MM08-08008-B90PF-M01 F15M	2,5	0,013	0,016	0,022	0,034
H11	MM08-08008-B90PF-M01 F15M	2,5	0,018	0,020	0,028	0,046
H12	MM08-08008-B90PF-M01 F15M	2,5	0,018	0,020	0,028	0,046
H21	MM08-08008-B90PF-M01 F15M	2,5	0,013	0,016	0,022	0,034

SMG = Seco material group
f_z = mm/tooth
v_c= m/min
a_e/D_c = %
All cutting data are start values

MM08 Z2 – Copy Cutting data

	F15M					F30M					T60M				
SMG	100%	20%	10%	5%	2%	100%	20%	10%	5%	2%	100%	20%	10%	5%	2%
P1	200	265	285	270	415	335	440	485	530	580	270	355	390	425	470
P2	195	255	270	265	405	325	425	470	510	570	265	345	380	415	460
P3	170	220	240	225	350	280	365	405	450	500	225	295	330	360	405
P4	155	195	215	200	305	250	330	360	395	440	200	265	290	320	355
P5	145	190	205	190	290	240	315	345	375	420	195	255	280	305	340
P6	165	215	230	215	330	270	350	385	425	475	215	285	315	340	385
P7	155	205	215	200	310	255	330	365	400	445	205	270	295	325	360
P8	145	185	200	190	290	235	310	340	375	420	190	250	275	305	340
P11	150	195	210	195	300	245	320	355	390	435	200	260	285	315	350
M1	155	205	220	215	325	260	345	375	415	460	210	280	305	335	370
M2	130	170	185	170	265	215	280	310	340	375	175	230	250	275	305
M3	110	145	155	155	200	170	225	245	270	300	140	180	200	215	245
M4	85	120	120	125	150	130	175	185	205	230	105	145	150	165	185
M5	70	100	100	105	125	110	145	155	170	190	85	120	125	140	155
K1	155	205	215	210	320	255	340	370	405	450	210	275	300	330	365
K2	140	180	195	180	275	225	295	325	355	395	185	240	265	290	320
K3	115	155	165	155	235	190	250	275	300	335	155	205	225	245	270
K4	110	145	155	145	225	185	240	265	290	320	150	195	215	235	260
K5	70	90	100	95	135	110	145	160	175	195	90	115	130	140	155
K6	100	130	140	130	195	160	210	235	255	285	130	170	190	205	230
K7	90	115	125	120	170	140	185	205	225	250	115	150	165	180	200
N1	550	720	760	830	1275	970	1275	1400	1525	1700	790	1025	1125	1225	1375
N2	450	580	610	670	1025	780	1025	1125	1225	1375	630	830	920	1000	1100
N3	300	390	410	445	680	520	690	750	820	920	425	560	610	670	740
N11	340	445	470	510	780	600	780	860	940	1050	485	640	700	760	850
S1	39	55	55	60	70	60	80	85	95	110	49	65	70	75	85
S2	32	46	45	47	55	49	65	70	75	85	39	55	55	60	70
S3	28	41	40	42	49	43	60	60	65	75	35	47	50	55	60
S11	55	75	80	80	100	85	115	125	135	150	70	95	100	110	125
S12	31	44	45	45	60	50	65	70	80	90	40	55	60	65	70
S13	25	37	36	38	45	39	55	55	60	70	32	43	46	50	55
H5	33	45	48	49	60	50	65	75	80	90	—	—	—	—	—
H8	36	50	50	55	60	55	70	75	85	95	—	—	—	—	—
H11	43	55	60	65	75	65	85	95	105	115	—	—	—	—	—
H12	70	90	100	100	120	105	140	150	165	185	—	—	—	—	—
H21	36	50	50	55	60	55	70	75	85	95	—	—	—	—	—

MM08 High-Feed Insert selection

SMG		a_p	f_z			
			100%	70%	30%	20%
P1	MM08-08.40-HF-MD06 F30M	0,16	0,60	0,60	0,70	0,85
P2	MM08-08.40-HF-MD06 F30M	0,16	0,60	0,60	0,70	0,90
P3	MM08-08.40-HF-MD06 F30M	0,16	0,55	0,55	0,65	0,85
P4	MM08-08.40-HF-MD06 F30M	0,16	0,55	0,55	0,65	0,80
P5	MM08-08.40-HF-MD06 F30M	0,16	0,55	0,55	0,65	0,80
P6	MM08-08.40-HF-MD06 F30M	0,16	0,55	0,55	0,60	0,80
P7	MM08-08.40-HF-MD06 F30M	0,16	0,55	0,55	0,60	0,80
P8	MM08-08.40-HF-MD06 F30M	0,16	0,55	0,55	0,65	0,85
P11	MM08-08.40-HF-MD06 F30M	0,16	0,55	0,55	0,60	0,80
M1	MM08-08.40-HF-MD06 F30M	0,16	0,60	0,60	0,70	0,90
M2	MM08-08.40-HF-MD06 F30M	0,16	0,55	0,55	0,65	0,80
M3	MM08-08.40-HF-MD06 F30M	0,16	0,44	0,44	0,50	0,60
M4	MM08-08.40-HF-MD06 F30M	0,16	0,38	0,38	0,44	0,50
M5	MM08-08.40-HF-MD06 F30M	0,16	0,38	0,38	0,44	0,50
K1	MM08-08.40-HF-MD06 F30M	0,16	0,60	0,60	0,70	0,90
K2	MM08-08.40-HF-MD06 F30M	0,16	0,55	0,55	0,65	0,80
K3	MM08-08.40-HF-MD06 F30M	0,16	0,55	0,55	0,65	0,80
K4	MM08-08.40-HF-MD06 F30M	0,16	0,55	0,55	0,65	0,80
K5	MM08-08.40-HF-MD06 F30M	0,16	0,50	0,50	0,55	0,70
K6	MM08-08.40-HF-MD06 F30M	0,16	0,55	0,55	0,65	0,80
K7	MM08-08.40-HF-MD06 F30M	0,16	0,50	0,50	0,55	0,70
N1	MM08-08.40-HF-MD06 F30M	0,16	0,75	0,75	0,90	1,3
N2	MM08-08.40-HF-MD06 F30M	0,16	0,75	0,75	0,90	1,3
N3	MM08-08.40-HF-MD06 F30M	0,16	0,75	0,75	0,90	1,3
N11	MM08-08.40-HF-MD06 F30M	0,16	0,75	0,75	0,90	1,3
S1	MM08-08.40-HF-MD06 F30M	0,16	0,38	0,38	0,44	0,50
S2	MM08-08.40-HF-MD06 F30M	0,16	0,38	0,38	0,44	0,50
S3	MM08-08.40-HF-MD06 F30M	0,16	0,36	0,36	0,40	0,48
S11	MM08-08.40-HF-MD06 F30M	0,16	0,44	0,44	0,50	0,60
S12	MM08-08.40-HF-MD06 F30M	0,16	0,44	0,44	0,50	0,60
S13	MM08-08.40-HF-MD06 F30M	0,16	0,38	0,38	0,44	0,50
H5	MM08-08.40-HF-MD06 F30M	0,16	0,38	0,38	0,42	0,50
H8	MM08-08.40-HF-MD06 F30M	0,16	0,28	0,28	0,32	0,38
H11	MM08-08.40-HF-MD06 F30M	0,16	0,38	0,38	0,42	0,50
H12	MM08-08.40-HF-MD06 F30M	0,16	0,38	0,38	0,42	0,50
H21	MM08-08.40-HF-MD06 F30M	0,16	0,28	0,28	0,32	0,38

SMG = Seco material group
f_z = mm/tooth
v_c= m/min
a_e/D_c = %
All cutting data are start values

MM08 High-Feed Cutting data

SMG	F30M			
	100%	70%	30%	20%
P1	240	285	340	355
P2	235	280	330	350
P3	205	245	290	305
P4	180	215	255	270
P5	170	205	240	255
P6	195	230	270	290
P7	180	215	255	275
P8	170	205	240	255
P11	175	210	250	265
M1	190	225	265	280
M2	155	185	220	230
M3	125	145	175	180
M4	95	115	130	140
M5	80	95	110	120
K1	185	220	260	275
K2	165	195	230	240
K3	140	165	195	205
K4	130	155	185	195
K5	80	95	110	120
K6	115	140	165	175
K7	100	120	145	155
N1	690	830	980	1000
N2	560	670	790	810
N3	370	450	530	540
N11	425	510	600	620
S1	44	55	60	65
S2	36	42	50	55
S3	31	37	44	46
S11	60	75	85	90
S12	36	43	50	55
S13	29	34	40	43
H5	37	44	50	55
H8	39	46	55	55
H11	48	55	65	70
H12	75	90	105	115
H21	39	46	55	55

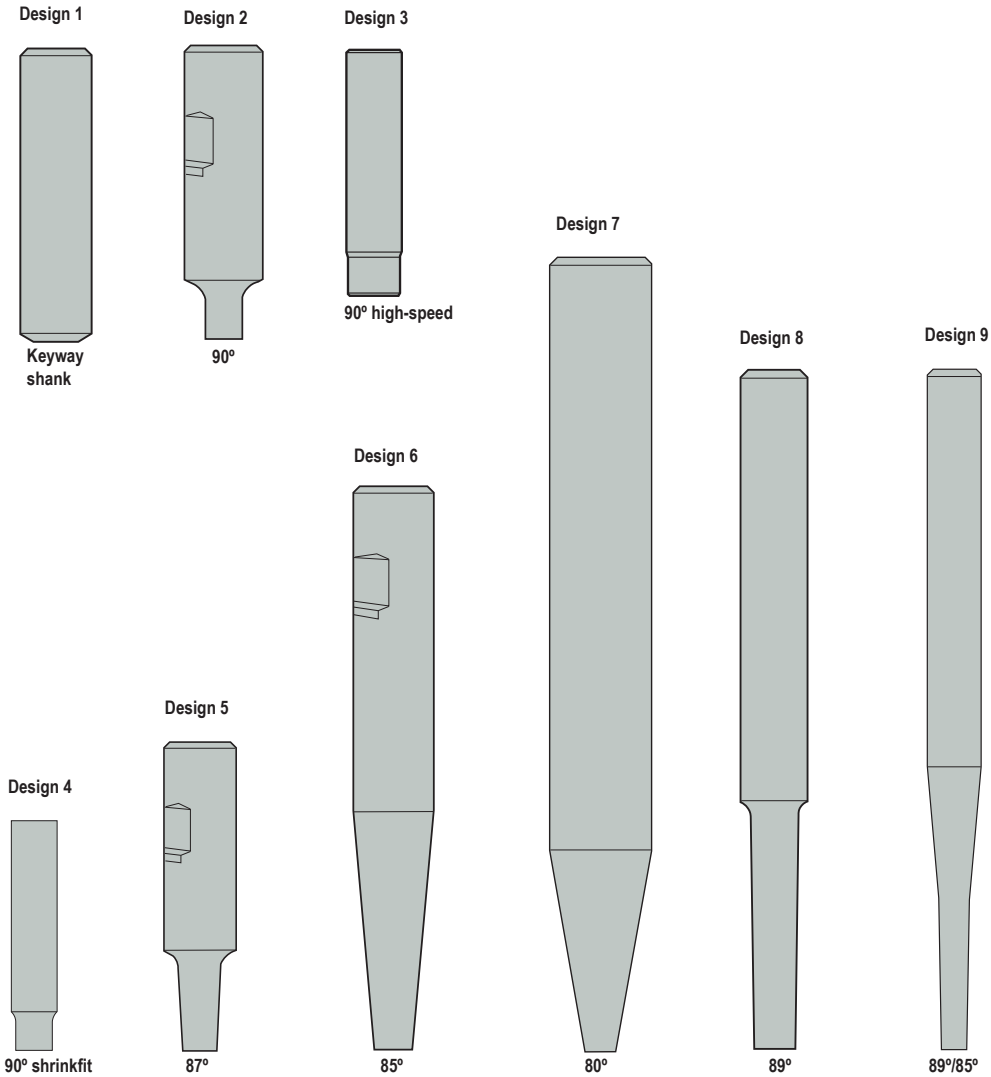
Design 1
Keyway shank
Design 2
90º
Design 3
90º high-speed
Design 7
80º
Design 8
89º
Design 9
89º/85º
Design 6
85º
Design 5
87º
Design 4
90º shrinkfit

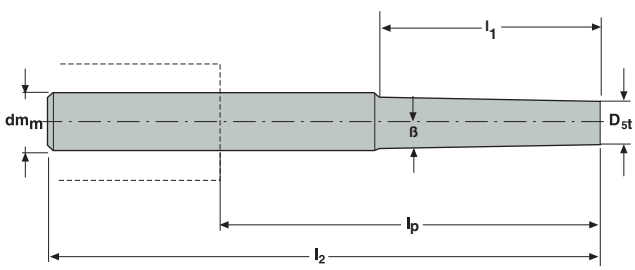
l1
dmm
ß
Dst
lp
l2

MM10

Design	Part No.	Connecting size	Dimensions in mm						KG	Spare part no.
			D_{5t}	dm_m	β°	l_1	l_2	l_p		
1	MM10- 16065.0-0000	MM10	9,5	16	60	0	65	17	0,1	1
3	MM10- 10045.0-0007	MM10	9,6	10	0	7	45	7	0,1	2
4	MM10- 12060.0-0007DS	MM10	9,6	12	0	7	60	15	0,1	3
2	MM10- 20075.3-0010	MM10	9,5	20	0	10	75	25	0,2	4
2	16085.0-0020DS	MM10	9,5	16	0	20	85	37	0,3	3
2	16105.0-0040DS	MM10	9,5	16	0	40	105	57	0,3	3
5	MM10- 20085.3-3023	MM10	9,5	20	3	23	85	35	0,2	4
5	12085.0-3024DS	MM10	9,5	12	3	23,8	85	40	0,2	3
6	MM10- 20140.3-5060	MM10	9,5	20	5	60	140	90	0,3	5
7	MM10- 32250.0-10063	MM10	9,5	32	10	63,8	250	190	1,3	5
8	MM10- 16160.0-1035M	MM10	9,5	16	1	35	160	112	0,2	6
8	12100.0-1035DS	MM10	9,5	12	1	35	100	55	0,2	3
8	14120.0-1050DS	MM10	9,5	14	1	50	120	75	0,3	3
8	16160.0-1055M	MM10	9,5	16	1	55	160	112	0,2	7
8	16160.0-1055DS	MM10	9,5	16	1	55	160	112	0,4	3
8	16160.0-1075M	MM10	9,5	16	1	75	160	112	0,2	7
8	16160.0-1075DS	MM10	9,5	16	1	75	160	112	0,4	3
9*	MM10- 20250.0-1055DS	MM10	9,5	20	1	55	250	200	1,0	3

*For design 9, the l_1 value is valid on the 89° tapered part

Spare Parts

Spare part no.	Tension screw	Sleeve
1		–
2		–
3		–
4		–
5		–
6		–
7		–

Please check availability in current price and stock-list.
Allen key H05-4 for sleeve to be ordered separately.

For wrench types, see insert pages 428 - 431.

Slot milling/ square shoulder milling

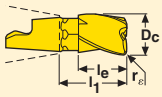

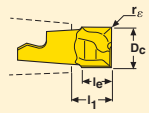

Insert type	Part No.	Dimensions in mm D_c	r_ε	l_e	l_1	Z_c*	Wrench	Coated Grades T60M	F15M	F30M	F40M
3-flute	MM10 -10012-A30-E03	10	0	11,87	15,72	3	MM0416			■	
3-flute	-10012-R05A30-M03	10	0,5	11,87	15,72	3	MM0416				■
3-flute	-10012-R10A30-D03	10	1,0	11,87	15,72	3	MM0416			■	
3-flute	-10012-R10A30-E03	10	1,0	11,87	15,72	3	MM0416			■	
3-flute	-10012-R10A30-M03	10	1,0	11,87	15,72	3	MM0416				■
3-flute	-10012-R20A30-M03	10	2,0	11,87	15,72	3	MM0416				■
3-flute	-10012-R30A30-E03	10	3,0	11,87	15,72	3	MM0416			■	
3-flute	-10012-R30A30-M03	10	3,0	11,87	15,72	3	MM0416				■
3-flute	-09512-A30-E03	9,525	0	11,87	15,72	3	MM0416			■	
3-flute	-09512-R04A30-M03	9,525	0,4	11,87	15,72	3	MM0416				■
3-flute	-09512-R08A30-D03	9,525	0,8	11,87	15,72	3	MM0416			■	
3-flute	-09512-R08A30-M03	9,525	0,8	11,87	15,72	3	MM0416				■
3-flute	-09512-R16A30-M03	9,525	1,6	11,87	15,72	3	MM0416				■
3-flute	-09512-R32A30-M03	9,525	3,175	11,87	15,72	3	MM0416				■
2-flute	MM10 -10007-M03	10	0	6,87	8,50	2	MM0612	■			
2-flute	-10007-R04-MD04	10	0,4	6,86	8,49	2	MM0612	■		■	
2-flute	-10007-R04P-M03	10	0,4	6,75	8,38	2	MM0612			■	
2-flute	-10007-R10-MD04	10	1,0	6,85	8,48	2	MM0612	■		■	
2-flute	-10007-R20-MD04	10	2,0	6,83	8,46	2	MM0612	■		■	
2-flute	-10007-R30-MD04	10	3,0	6,81	8,44	2	MM0612			■	
2-flute	-09510-M03	9,525	0	6,87	8,50	2	MM0612	■			
2-flute	-09510-R04-MD04	9,525	0,4	6,86	8,49	2	MM0612	■			
2-flute	-09510-R32-MD04	9,525	3,175	6,86	8,43	2	MM0612			■	
2-flute	-10007-R04A8-E03	10	0,4	6,6	8,44	2	MM0612	■		■	
2-flute	-09510-R08A8-E03	9,525	0,8	6,6	8,37	2	MM0612			■	
Keyway 3-flute	MM10 -09512-R03A30-M03	9,525	0,3	11,87	15,72	3	MM0416				■
Keyway 2-flute	-09307T-R02-D04	9,27	0,2	6,87	8,49	2	MM0612	■			
Keyway 2-flute	-09807T-R03-D04	9,8	0,3	6,87	8,49	2	MM0612	■			

*Effective number of flutes

For Torque keys and torque values, see page

Centre drilling

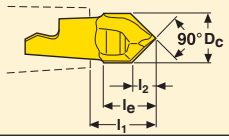

Insert type	Part No.	Dimensions in mm				Z_c*	Wrench	Coated				
								Grades				
		D_c	l_e	l_1	l_2			T60M	F15M	F30M	F40M	
90°	**MM10 -10005-C90-M03**	10	10	11,8	4,69	2	MM0612	■				
120°	**MM10 -10007-C120-M03**	10	10,4	11,8	2,70	2	MM0612	■				

Chamfering

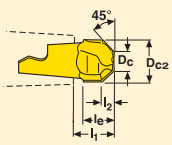

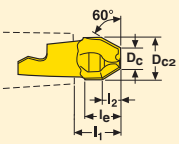

Insert type	Part No.	Dimensions in mm					Z_c*	Wrench	Coated				
									Grades				
		D_c	D_{c2}	l_e	l_1	l_2			T60M	F15M	F30M	F40M	
45°	**MM10 -10007-4525-E03**	4,82	10,0	6,94	8,48	2,60	2	MM0612	■				
60°	**MM10 -10008-6040-E03**	5,24	10,0	8,05	9,6	4,20	2	MM0612	■				

*Effective number of flutes

For Torque keys and torque values, see page

Plunge milling

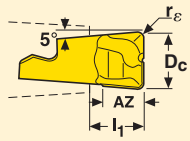

Insert type	Part No.	Dimensions in mm				Z_c*	Wrench	Coated				
								Grades				
		D_c	r_ε	AZ	l_1			T60M	F15M	F30M	F40M	
2-flute	**MM10 -10007-R10-PL-MD04**	10	1,0	7,1	8,48	2	MM0612			■		
2-flute	**MM10 -10007-R10-PLP-M03**	10	1,0	6,8	8,38	2	MM0612			■		

*Effective number of flutes

For Torque keys and torque values, see page

Precision inserts for semi-finishing in all materials

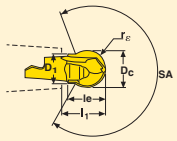

Insert type	Part No.	Dimensions in mm D_c	r_ε	l_e	l_1	D_1	SA°	Z_c*	Wrench	Coated Grades T60M	F15M	F30M	F40M	
2-flute	MM10 -12012-B120PF-M02	12	6,0	12	13,2	10	247,0	2	MM0612		■			
2-flute	MM10 -12712-B120PF-M03	12,7	6,35	12,4	13,56	10	256,0	2	MM1420		■			
2-flute	MM10 -12012-B120P-M05	12	6,0	12	13,2	10	247,0	2	MM0612			■		
2-flute	MM10 -12712-B120P-M05	12,7	6,35	12,4	13,56	10	256,0	2	MM1420			■		

Copy milling

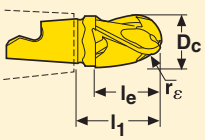

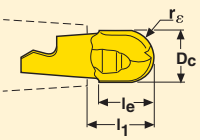

Insert type	Part No.	Dimensions in mm D_c	r_ε	l_e	l_1	Z_c*	Wrench	Coated Grades T60M	F15M	F30M	F40M	
3-flute	MM10 -10012-B90A30-E03	10	5,0	11,87	15,72	3	MM0416			■		
3-flute	-10012-B90A30-M03	10	5,0	11,87	15,72	3	MM0416				■	
3-flute	-10012-B90A30-D03	10	5,0	11,87	15,72	3	MM0416			■		
3-flute	-09512-B90A30-E03	9,525	4,763	11,87	15,72	3	MM0416			■		
3-flute	-09512-B90A30-M03	9,525	4,763	11,87	15,72	3	MM0416				■	
3-flute	-09512-B90A30-D03	9,525	4,763	11,87	15,72	3	MM0416			■		
2-flute	MM10 -10010-B90-MD04	10	5,0	10,23	11,77	2	MM0612	■		■		
2-flute	-10010-B90S-E04	10	5,0	10,23	11,77	2	MM0612			■		
2-flute	-09510-B90S-E04	9,525	4,763	10,23	11,77	2	MM0612			■		
2-flute	-10010-B90P-M04	10	5,0	8,73	11,74	2	MM0612			■		
2-flute	-10010-B90PF-M02	10	5,0	8,73	11,74	2	MM0612		■			
2-flute	-09510-B90P-M04	9,525	4,763	8,73	11,74	2	MM0612	■		■		

*Effective number of flutes
For Torque keys and torque values, see page

High feed

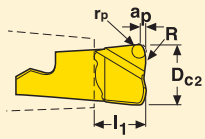

Insert type	Part No.	Dimensions in mm					Z_c*	Wrench	Coated				
									Grades				
		a_p	D_{c2}	r_p	R	l_1			T60M	F15M	F30M	F40M	
2-flute	**MM10 -10.50-HF-MD08**	0,44	10	1,13	5	8,5	2	MM0612		■	■		

*Effective number of flutes
For Torque keys and torque values, see page

MM10 – General Insert selection

SMG		a_p	f_z 100%	f_z 40%	f_z 20%	f_z 10%
P1	MM10-10012-R05A30-M03 F40M	2,0	0,044	0,044	0,055	0,075
P2	MM10-10012-R05A30-M03 F40M	2,0	0,044	0,046	0,055	0,075
P3	MM10-10012-R05A30-M03 F40M	2,0	0,042	0,042	0,050	0,070
P4	MM10-10012-R05A30-M03 F40M	2,0	0,042	0,042	0,050	0,070
P5	MM10-10012-R05A30-M03 F40M	2,0	0,040	0,042	0,050	0,065
P6	MM10-10012-R05A30-M03 F40M	2,0	0,040	0,040	0,050	0,065
P7	MM10-10012-R05A30-M03 F40M	2,0	0,040	0,040	0,050	0,065
P8	MM10-10012-R05A30-M03 F40M	2,0	0,042	0,042	0,050	0,070
P11	MM10-10012-R05A30-M03 F40M	2,0	0,040	0,040	0,050	0,065
M1	MM10-10012-R05A30-M03 F40M	2,0	0,044	0,046	0,055	0,075
M2	MM10-10012-R05A30-M03 F40M	2,0	0,040	0,042	0,050	0,065
M3	MM10-10012-R05A30-M03 F40M	1,7	0,032	0,034	0,040	0,055
M4	MM10-10012-R05A30-M03 F40M	1,3	0,030	0,030	0,036	0,050
M5	MM10-10012-R05A30-M03 F40M	1,3	0,030	0,030	0,036	0,050
K1	MM10-10012-R10A30-E03 F30M	2,0	0,048	0,048	0,060	0,080
K2	MM10-10012-R10A30-E03 F30M	2,0	0,044	0,044	0,055	0,075
K3	MM10-10012-R10A30-E03 F30M	2,0	0,044	0,044	0,055	0,075
K4	MM10-10012-R10A30-E03 F30M	2,0	0,044	0,044	0,055	0,075
K5	MM10-10012-R10A30-D03 F30M	2,0	0,040	0,040	0,050	0,065
K6	MM10-10012-R10A30-D03 F30M	2,0	0,044	0,044	0,055	0,075
K7	MM10-10012-R10A30-D03 F30M	2,0	0,040	0,040	0,050	0,065
N1	MM10-10012-R10A30-E03 F30M	2,0	0,060	0,060	0,075	0,10
N2	MM10-10012-R10A30-E03 F30M	2,0	0,060	0,060	0,075	0,10
N3	MM10-10012-R10A30-E03 F30M	2,0	0,060	0,060	0,075	0,10
N11	MM10-10012-R10A30-E03 F30M	2,0	0,060	0,060	0,075	0,10
S1	MM10-10012-R10A30-D03 F30M	1,3	0,034	0,036	0,044	0,060
S2	MM10-10012-R10A30-D03 F30M	1,3	0,034	0,036	0,044	0,060
S3	MM10-10012-R10A30-D03 F30M	1,3	0,032	0,032	0,040	0,055
S11	MM10-10012-R05A30-M03 F40M	1,5	0,032	0,034	0,042	0,055
S12	MM10-10012-R05A30-M03 F40M	1,5	0,032	0,034	0,042	0,055
S13	MM10-10012-R05A30-M03 F40M	1,3	0,030	0,030	0,036	0,050
H5	MM10-10012-R10A30-D03 F30M	1,7	0,030	0,032	0,038	0,050
H8	MM10-10012-R10A30-D03 F30M	1,5	0,024	0,024	0,030	0,040
H11	MM10-10012-R10A30-D03 F30M	1,7	0,030	0,032	0,038	0,050
H12	MM10-10012-R10A30-D03 F30M	1,7	0,030	0,032	0,038	0,050
H21	MM10-10012-R10A30-D03 F30M	1,5	0,024	0,024	0,030	0,040

SMG = Seco material group
f_z = mm/tooth
v_c= m/min
a_e/D_c = %
All cutting data are start values

MM10 – General Cutting data

	F30M				F40M				T60M			
SMG	100%	40%	20%	10%	100%	40%	20%	10%	100%	40%	20%	10%
P1	280	345	385	425	255	320	355	395	210	245	285	315
P2	270	335	375	410	250	310	345	385	205	240	275	305
P3	235	290	325	355	215	270	300	330	175	205	240	265
P4	205	255	285	315	190	240	265	295	160	185	215	235
P5	195	245	275	300	180	230	255	280	150	175	205	225
P6	225	275	310	340	205	260	285	315	170	200	230	255
P7	210	260	290	320	195	245	270	295	160	185	215	240
P8	195	245	275	300	180	225	255	275	150	175	200	225
P11	205	255	280	310	190	235	265	290	155	180	210	235
M1	215	270	300	330	200	250	280	310	165	195	220	245
M2	180	220	245	270	165	205	230	255	135	160	185	205
M3	140	175	195	215	130	165	180	200	110	120	145	160
M4	110	135	150	165	100	125	140	150	85	90	105	125
M5	90	110	125	135	85	105	115	125	70	75	90	105
K1	210	265	295	325	200	245	275	305	160	190	220	240
K2	185	235	260	285	175	220	240	265	145	170	195	215
K3	160	200	220	245	145	185	205	225	120	140	165	180
K4	150	190	210	230	140	175	195	215	115	135	155	175
K5	90	115	130	140	85	105	120	130	70	80	95	105
K6	135	165	185	205	125	155	170	190	100	120	140	155
K7	120	145	165	180	110	135	150	165	90	105	120	135
N1	800	1000	1125	1225	740	940	1025	1150	610	700	830	910
N2	650	810	900	990	600	760	830	930	490	570	670	740
N3	435	540	600	660	400	500	560	620	325	380	445	490
N11	495	620	690	750	455	580	640	710	375	430	510	560
S1	50	60	70	75	46	60	65	70	39	42	49	60
S2	41	50	55	60	37	47	50	55	31	34	40	47
S3	35	43	49	55	33	41	45	50	27	30	35	41
S11	70	90	100	110	65	80	90	100	55	60	70	80
S12	41	50	55	60	38	47	55	60	32	35	41	47
S13	32	40	45	49	30	38	42	46	25	27	32	37
H5	42	50	60	65	39	49	55	60	—	—	—	—
H8	44	55	60	65	41	50	55	60	—	—	—	—
H11	55	65	75	80	50	60	70	75	—	—	—	—
H12	90	110	120	135	80	100	110	125	—	—	—	—
H21	44	55	60	65	41	50	55	60	—	—	—	—

MM10 Z3 – Copy Insert selection – Roughing

SMG		a_p	f_z			
			100%	40%	20%	10%
P1	MM10-10012-B90A30-M03 F40M	2,0	0,060	0,060	0,075	0,10
P2	MM10-10012-B90A30-M03 F40M	2,0	0,060	0,060	0,075	0,10
P3	MM10-10012-B90A30-M03 F40M	2,0	0,055	0,060	0,070	0,095
P4	MM10-10012-B90A30-M03 F40M	2,0	0,055	0,055	0,070	0,095
P5	MM10-10012-B90A30-M03 F40M	2,0	0,055	0,055	0,070	0,095
P6	MM10-10012-B90A30-M03 F40M	2,0	0,055	0,055	0,070	0,090
P7	MM10-10012-B90A30-M03 F40M	2,0	0,055	0,055	0,070	0,090
P8	MM10-10012-B90A30-M03 F40M	2,0	0,055	0,060	0,070	0,095
P11	MM10-10012-B90A30-M03 F40M	2,0	0,055	0,055	0,070	0,090
M1	MM10-10012-B90A30-M03 F40M	2,0	0,060	0,060	0,075	0,10
M2	MM10-10012-B90A30-M03 F40M	2,0	0,055	0,055	0,070	0,095
M3	MM10-10012-B90A30-M03 F40M	1,7	0,044	0,046	0,055	0,075
M4	MM10-10012-B90A30-M03 F40M	1,3	0,038	0,040	0,048	0,065
M5	MM10-10012-B90A30-M03 F40M	1,3	0,038	0,040	0,048	0,065
K1	MM10-10012-B90A30-E03 F30M	2,0	0,060	0,060	0,075	0,10
K2	MM10-10012-B90A30-E03 F30M	2,0	0,055	0,055	0,070	0,095
K3	MM10-10012-B90A30-E03 F30M	2,0	0,055	0,055	0,070	0,095
K4	MM10-10012-B90A30-E03 F30M	2,0	0,055	0,055	0,070	0,095
K5	MM10-10012-B90A30-D03 F30M	2,0	0,050	0,050	0,060	0,085
K6	MM10-10012-B90A30-D03 F30M	2,0	0,055	0,055	0,070	0,095
K7	MM10-10012-B90A30-D03 F30M	2,0	0,050	0,050	0,060	0,085
N1	MM10-10012-B90A30-E03 F30M	2,0	0,075	0,080	0,095	0,13
N2	MM10-10012-B90A30-E03 F30M	2,0	0,075	0,080	0,095	0,13
N3	MM10-10012-B90A30-E03 F30M	2,0	0,075	0,080	0,095	0,13
N11	MM10-10012-B90A30-E03 F30M	2,0	0,075	0,080	0,095	0,13
S1	MM10-10012-B90A30-D03 F30M	1,3	0,038	0,040	0,048	0,065
S2	MM10-10012-B90A30-D03 F30M	1,3	0,038	0,040	0,048	0,065
S3	MM10-10012-B90A30-D03 F30M	1,3	0,036	0,036	0,044	0,060
S11	MM10-10012-B90A30-M03 F40M	1,5	0,044	0,046	0,055	0,075
S12	MM10-10012-B90A30-M03 F40M	1,5	0,044	0,046	0,055	0,075
S13	MM10-10012-B90A30-M03 F40M	1,3	0,038	0,040	0,048	0,065
H5	MM10-10012-B90A30-D03 F30M	1,7	0,038	0,038	0,046	0,065
H8	MM10-10012-B90A30-D03 F30M	1,5	0,028	0,030	0,036	0,048
H11	MM10-10012-B90A30-D03 F30M	1,7	0,038	0,038	0,046	0,065
H12	MM10-10012-B90A30-D03 F30M	1,7	0,038	0,038	0,046	0,065
H21	MM10-10012-B90A30-D03 F30M	1,5	0,028	0,030	0,036	0,048

SMG = Seco material group
f_z = mm/tooth
v_c= m/min
a_e/D_c = %
All cutting data are start values

MM10 Z3 – Copy Insert selection – Semi finishing

SMG		a_p	f_z			
			15%	10%	5%	2%
P1	MM10-10012-B90A30-E03 F30M	2,0	0,085	0,10	0,14	0,24
P2	MM10-10012-B90A30-E03 F30M	2,0	0,085	0,10	0,14	0,24
P3	MM10-10012-B90A30-E03 F30M	2,0	0,080	0,095	0,14	0,22
P4	MM10-10012-B90A30-E03 F30M	2,0	0,080	0,095	0,13	0,22
P5	MM10-10012-B90A30-E03 F30M	2,0	0,080	0,095	0,13	0,22
P6	MM10-10012-B90A30-E03 F30M	2,0	0,075	0,090	0,13	0,20
P7	MM10-10012-B90A30-E03 F30M	2,0	0,075	0,090	0,13	0,20
P8	MM10-10012-B90A30-E03 F30M	2,0	0,080	0,095	0,14	0,22
P11	MM10-10012-B90A30-E03 F30M	2,0	0,075	0,090	0,13	0,20
M1	MM10-10012-B90A30-E03 F30M	2,0	0,085	0,10	0,14	0,24
M2	MM10-10012-B90A30-E03 F30M	2,0	0,080	0,095	0,13	0,22
M3	MM10-10012-B90A30-E03 F30M	1,7	0,060	0,075	0,10	0,17
M4	MM10-10012-B90A30-E03 F30M	1,3	0,055	0,065	0,090	0,14
M5	MM10-10012-B90A30-E03 F30M	1,3	0,055	0,065	0,090	0,14
K1	MM10-10012-B90A30-E03 F30M	2,0	0,085	0,10	0,14	0,24
K2	MM10-10012-B90A30-E03 F30M	2,0	0,080	0,095	0,13	0,22
K3	MM10-10012-B90A30-E03 F30M	2,0	0,080	0,095	0,13	0,22
K4	MM10-10012-B90A30-E03 F30M	2,0	0,080	0,095	0,13	0,22
K5	MM10-10012-B90A30-E03 F30M	2,0	0,070	0,085	0,12	0,19
K6	MM10-10012-B90A30-E03 F30M	2,0	0,080	0,095	0,13	0,22
K7	MM10-10012-B90A30-E03 F30M	2,0	0,070	0,085	0,12	0,19
N1	MM10-10012-B90A30-E03 F30M	2,0	0,11	0,13	0,18	0,30
N2	MM10-10012-B90A30-E03 F30M	2,0	0,11	0,13	0,18	0,30
N3	MM10-10012-B90A30-E03 F30M	2,0	0,11	0,13	0,18	0,30
N11	MM10-10012-B90A30-E03 F30M	2,0	0,11	0,13	0,18	0,30
S1	MM10-10012-B90A30-E03 F30M	1,3	0,055	0,065	0,090	0,14
S2	MM10-10012-B90A30-E03 F30M	1,3	0,055	0,065	0,090	0,14
S3	MM10-10012-B90A30-D03 F30M	1,3	0,050	0,060	0,085	0,13
S11	MM10-10012-B90A30-E03 F30M	1,5	0,060	0,075	0,10	0,17
S12	MM10-10012-B90A30-E03 F30M	1,5	0,060	0,075	0,10	0,17
S13	MM10-10012-B90A30-E03 F30M	1,3	0,055	0,065	0,090	0,14
H5	MM10-10012-B90A30-E03 F30M	1,7	0,055	0,065	0,085	0,14
H8	MM10-10012-B90A30-E03 F30M	1,5	0,040	0,048	0,065	0,11
H11	MM10-10012-B90A30-E03 F30M	1,7	0,055	0,065	0,085	0,14
H12	MM10-10012-B90A30-E03 F30M	1,7	0,055	0,065	0,085	0,14
H21	MM10-10012-B90A30-E03 F30M	1,5	0,040	0,048	0,065	0,11

SMG = Seco material group
f_z = mm/tooth
v_c= m/min
a_e/D_c = %
All cutting data are start values

MM10 Z3 – Copy Insert selection – Finishing

SMG		a_p	f_z			
			15%	10%	5%	2%
P1	MM10-10012-B90A30-E03 F30M	2,0	0,085	0,10	0,14	0,24
P2	MM10-10012-B90A30-E03 F30M	2,0	0,085	0,10	0,14	0,24
P3	MM10-10012-B90A30-E03 F30M	2,0	0,080	0,095	0,14	0,22
P4	MM10-10012-B90A30-E03 F30M	2,0	0,080	0,095	0,13	0,22
P5	MM10-10012-B90A30-E03 F30M	2,0	0,080	0,095	0,13	0,22
P6	MM10-10012-B90A30-E03 F30M	2,0	0,075	0,090	0,13	0,20
P7	MM10-10012-B90A30-E03 F30M	2,0	0,075	0,090	0,13	0,20
P8	MM10-10012-B90A30-E03 F30M	2,0	0,080	0,095	0,14	0,22
P11	MM10-10012-B90A30-E03 F30M	2,0	0,075	0,090	0,13	0,20
M1	MM10-10012-B90A30-E03 F30M	2,0	0,085	0,10	0,14	0,24
M2	MM10-10012-B90A30-E03 F30M	2,0	0,080	0,095	0,13	0,22
M3	MM10-10012-B90A30-E03 F30M	1,7	0,060	0,075	0,10	0,17
M4	MM10-10012-B90A30-E03 F30M	1,3	0,055	0,065	0,090	0,14
M5	MM10-10012-B90A30-E03 F30M	1,3	0,055	0,065	0,090	0,14
K1	MM10-10012-B90A30-E03 F30M	2,0	0,085	0,10	0,14	0,24
K2	MM10-10012-B90A30-E03 F30M	2,0	0,080	0,095	0,13	0,22
K3	MM10-10012-B90A30-E03 F30M	2,0	0,080	0,095	0,13	0,22
K4	MM10-10012-B90A30-E03 F30M	2,0	0,080	0,095	0,13	0,22
K5	MM10-10012-B90A30-E03 F30M	2,0	0,070	0,085	0,12	0,19
K6	MM10-10012-B90A30-E03 F30M	2,0	0,080	0,095	0,13	0,22
K7	MM10-10012-B90A30-E03 F30M	2,0	0,070	0,085	0,12	0,19
N1	MM10-10012-B90A30-E03 F30M	2,0	0,11	0,13	0,18	0,30
N2	MM10-10012-B90A30-E03 F30M	2,0	0,11	0,13	0,18	0,30
N3	MM10-10012-B90A30-E03 F30M	2,0	0,11	0,13	0,18	0,30
N11	MM10-10012-B90A30-E03 F30M	2,0	0,11	0,13	0,18	0,30
S1	MM10-10012-B90A30-E03 F30M	1,3	0,055	0,065	0,090	0,14
S2	MM10-10012-B90A30-E03 F30M	1,3	0,055	0,065	0,090	0,14
S3	MM10-10012-B90A30-E03 F30M	1,3	0,050	0,060	0,085	0,13
S11	MM10-10012-B90A30-E03 F30M	1,5	0,060	0,075	0,10	0,17
S12	MM10-10012-B90A30-E03 F30M	1,5	0,060	0,075	0,10	0,17
S13	MM10-10012-B90A30-E03 F30M	1,3	0,055	0,065	0,090	0,14
H5	MM10-10012-B90A30-E03 F30M	1,7	0,055	0,065	0,085	0,14
H8	MM10-10012-B90A30-E03 F30M	1,5	0,040	0,048	0,065	0,11
H11	MM10-10012-B90A30-E03 F30M	1,7	0,055	0,065	0,085	0,14
H12	MM10-10012-B90A30-E03 F30M	1,7	0,055	0,065	0,085	0,14
H21	MM10-10012-B90A30-E03 F30M	1,5	0,040	0,048	0,065	0,11

SMG = Seco material group
f_z = mm/tooth
v_c= m/min
a_e/D_c = %
All cutting data are start values

MM10 Z3 – Copy Cutting data

	F30M					F40M				
SMG	100%	20%	10%	5%	2%	100%	20%	10%	5%	2%
P1	330	435	475	520	580	315	415	455	495	560
P2	320	420	465	510	570	305	400	445	485	540
P3	280	365	405	445	495	265	345	385	420	470
P4	245	325	355	390	435	235	310	340	370	415
P5	235	310	345	375	420	225	295	325	355	400
P6	265	350	385	420	470	255	330	365	400	450
P7	250	330	365	395	445	240	315	345	375	425
P8	235	305	340	375	415	225	290	325	355	395
P11	245	320	355	385	430	230	305	335	365	410
M1	260	335	375	410	460	245	320	355	390	435
M2	215	280	310	335	380	200	265	295	320	360
M3	170	225	245	265	295	160	215	230	255	285
M4	130	175	185	205	230	125	165	175	195	215
M5	105	145	155	170	190	100	140	145	160	180
K1	255	330	370	400	450	245	315	350	385	430
K2	225	295	325	355	400	215	280	310	335	380
K3	190	250	275	300	335	180	235	265	285	320
K4	180	240	265	285	320	170	225	250	270	305
K5	110	145	160	175	195	105	135	150	165	185
K6	160	210	230	250	285	150	200	220	240	270
K7	140	185	205	225	250	135	175	195	210	240
N1	960	1275	1375	1525	1700	910	1200	1325	1450	1625
N2	770	1025	1125	1225	1375	740	970	1075	1175	1300
N3	520	680	750	820	920	490	650	710	780	870
N11	590	780	850	940	1050	560	740	810	890	1000
S1	60	80	85	95	105	55	80	80	90	100
S2	48	65	70	75	85	46	65	65	75	80
S3	42	55	60	65	75	40	55	60	65	70
S11	85	115	125	135	150	80	110	120	130	145
S12	49	65	70	80	85	47	65	70	75	85
S13	39	55	55	60	70	37	50	55	60	65
H5	50	65	75	80	90	48	65	70	75	85
H8	50	70	75	80	95	50	65	70	80	90
H11	65	85	95	100	115	60	80	90	100	110
H12	105	140	150	165	185	100	130	145	155	175
H21	50	70	75	80	95	50	65	70	80	90

MM10 Z2 – Copy Insert selection – Roughing

SMG		a_p	f_z			
			100%	40%	20%	10%
P1	MM10-10010-B90S-E04 F30M	4,5	0,080	0,080	0,10	0,13
P2	MM10-10010-B90S-E04 F30M	4,5	0,080	0,085	0,10	0,14
P3	MM10-10010-B90S-E04 F30M	4,5	0,075	0,080	0,095	0,13
P4	MM10-10010-B90-MD04 F30M	4,5	0,075	0,075	0,095	0,13
P5	MM10-10010-B90-MD04 F30M	4,5	0,075	0,075	0,090	0,12
P6	MM10-10010-B90-MD04 F30M	4,5	0,075	0,075	0,090	0,12
P7	MM10-10010-B90-MD04 F30M	4,5	0,075	0,075	0,090	0,12
P8	MM10-10010-B90-MD04 F30M	4,5	0,075	0,080	0,095	0,13
P11	MM10-10010-B90-MD04 F30M	4,5	0,075	0,075	0,090	0,12
M1	MM10-10010-B90S-E04 F30M	4,5	0,080	0,085	0,10	0,14
M2	MM10-10010-B90S-E04 F30M	4,5	0,075	0,075	0,090	0,12
M3	MM10-10010-B90S-E04 F30M	3,5	0,060	0,060	0,075	0,10
M4	MM10-10010-B90-MD04 F30M	2,5	0,050	0,055	0,065	0,085
M5	MM10-10010-B90-MD04 F30M	2,5	0,050	0,055	0,065	0,085
K1	MM10-10010-B90S-E04 F30M	4,5	0,080	0,085	0,10	0,14
K2	MM10-10010-B90S-E04 F30M	4,5	0,075	0,075	0,090	0,12
K3	MM10-10010-B90S-E04 F30M	4,5	0,075	0,075	0,090	0,12
K4	MM10-10010-B90S-E04 F30M	4,5	0,075	0,075	0,090	0,12
K5	MM10-10010-B90-MD04 F30M	4,5	0,065	0,070	0,085	0,11
K6	MM10-10010-B90-MD04 F30M	4,5	0,075	0,075	0,090	0,12
K7	MM10-10010-B90-MD04 F30M	4,5	0,065	0,070	0,085	0,11
N1	MM10-10010-B90S-E04 F30M	4,5	0,10	0,11	0,13	0,17
N2	MM10-10010-B90S-E04 F30M	4,5	0,10	0,11	0,13	0,17
N3	MM10-10010-B90S-E04 F30M	4,5	0,10	0,11	0,13	0,17
N11	MM10-10010-B90S-E04 F30M	4,5	0,10	0,11	0,13	0,17
S1	MM10-10010-B90S-E04 F30M	2,5	0,050	0,055	0,065	0,085
S2	MM10-10010-B90S-E04 F30M	2,5	0,050	0,055	0,065	0,085
S3	MM10-10010-B90S-E04 F30M	2,5	0,048	0,048	0,060	0,080
S11	MM10-10010-B90S-E04 F30M	3,0	0,060	0,060	0,075	0,10
S12	MM10-10010-B90S-E04 F30M	3,0	0,060	0,060	0,075	0,10
S13	MM10-10010-B90S-E04 F30M	2,5	0,050	0,055	0,065	0,085
H5	MM10-10010-B90-MD04 F30M	3,5	0,050	0,050	0,065	0,085
H8	MM10-10010-B90-MD04 F30M	3,0	0,038	0,040	0,048	0,065
H11	MM10-10010-B90-MD04 F30M	3,5	0,050	0,050	0,065	0,085
H12	MM10-10010-B90-MD04 F30M	3,5	0,050	0,050	0,065	0,085
H21	MM10-10010-B90-MD04 F30M	3,0	0,038	0,040	0,048	0,065

SMG = Seco material group
f_z = mm/tooth
v_c= m/min
a_e/D_c = %
All cutting data are start values

MM10 Z2 – Copy Insert selection – Semi finishing

SMG		a_p	f_z			
			15%	10%	5%	2%
P1	MM10-10010-B90P-M04 F30M	4,5	0,11	0,13	0,19	0,32
P2	MM10-10010-B90P-M04 F30M	4,5	0,11	0,14	0,19	0,32
P3	MM10-10010-B90P-M04 F30M	4,5	0,11	0,13	0,18	0,30
P4	MM10-10010-B90P-M04 F30M	4,5	0,11	0,13	0,18	0,30
P5	MM10-10010-B90P-M04 F30M	4,5	0,10	0,12	0,17	0,30
P6	MM10-10010-B90P-M04 F30M	4,5	0,10	0,12	0,17	0,28
P7	MM10-10010-B90P-M04 F30M	4,5	0,10	0,12	0,17	0,28
P8	MM10-10010-B90P-M04 F30M	4,5	0,11	0,13	0,18	0,30
P11	MM10-10010-B90P-M04 F30M	4,5	0,10	0,12	0,17	0,28
M1	MM10-10010-B90P-M04 F30M	4,5	0,11	0,14	0,19	0,32
M2	MM10-10010-B90P-M04 F30M	4,5	0,10	0,12	0,17	0,30
M3	MM10-10010-B90P-M04 F30M	3,5	0,085	0,10	0,14	0,22
M4	MM10-10010-B90P-M04 F30M	2,5	0,070	0,085	0,12	0,20
M5	MM10-10010-B90P-M04 F30M	2,5	0,070	0,085	0,12	0,20
K1	MM10-10010-B90P-M04 F30M	4,5	0,11	0,14	0,19	0,32
K2	MM10-10010-B90P-M04 F30M	4,5	0,10	0,12	0,17	0,30
K3	MM10-10010-B90P-M04 F30M	4,5	0,10	0,12	0,17	0,30
K4	MM10-10010-B90P-M04 F30M	4,5	0,10	0,12	0,17	0,30
K5	MM10-10010-B90P-M04 F30M	4,5	0,095	0,11	0,16	0,26
K6	MM10-10010-B90P-M04 F30M	4,5	0,10	0,12	0,17	0,30
K7	MM10-10010-B90P-M04 F30M	4,5	0,095	0,11	0,16	0,26
N1	MM10-10010-B90P-M04 F30M	4,5	0,15	0,17	0,24	0,42
N2	MM10-10010-B90P-M04 F30M	4,5	0,15	0,17	0,24	0,42
N3	MM10-10010-B90P-M04 F30M	4,5	0,15	0,17	0,24	0,42
N11	MM10-10010-B90P-M04 F30M	4,5	0,15	0,17	0,24	0,42
S1	MM10-10010-B90P-M04 F30M	2,5	0,070	0,085	0,12	0,20
S2	MM10-10010-B90P-M04 F30M	2,5	0,070	0,085	0,12	0,20
S3	MM10-10010-B90P-M04 F30M	2,5	0,065	0,080	0,11	0,18
S11	MM10-10010-B90P-M04 F30M	3,0	0,085	0,10	0,14	0,22
S12	MM10-10010-B90P-M04 F30M	3,0	0,085	0,10	0,14	0,22
S13	MM10-10010-B90P-M04 F30M	2,5	0,070	0,085	0,12	0,20
H5	MM10-10010-B90P-M04 F30M	3,5	0,070	0,085	0,12	0,19
H8	MM10-10010-B90P-M04 F30M	3,0	0,055	0,065	0,090	0,14
H11	MM10-10010-B90P-M04 F30M	3,5	0,070	0,085	0,12	0,19
H12	MM10-10010-B90P-M04 F30M	3,5	0,070	0,085	0,12	0,19
H21	MM10-10010-B90P-M04 F30M	3,0	0,055	0,065	0,090	0,14

SMG = Seco material group
f_z = mm/tooth
v_c= m/min
a_e/D_c = %
All cutting data are start values

MM10 Z2 – Copy Insert selection – Finishing

SMG		a_p	f_z			
			15%	10%	5%	2%
P1	MM10-10010-B90PF-M02 F15M	4,5	0,028	0,034	0,046	0,075
P2	MM10-10010-B90PF-M02 F15M	4,5	0,028	0,034	0,046	0,075
P3	MM10-10010-B90PF-M02 F15M	4,5	0,026	0,032	0,044	0,070
P4	MM10-10010-B90PF-M02 F15M	4,5	0,026	0,032	0,044	0,070
P5	MM10-10010-B90PF-M02 F15M	4,5	0,026	0,030	0,042	0,065
P6	MM10-10010-B90PF-M02 F15M	4,5	0,026	0,030	0,042	0,065
P7	MM10-10010-B90PF-M02 F15M	4,5	0,026	0,030	0,042	0,065
P8	MM10-10010-B90PF-M02 F15M	4,5	0,026	0,032	0,044	0,070
P11	MM10-10010-B90PF-M02 F15M	4,5	0,026	0,030	0,042	0,065
M1	MM10-10010-B90PF-M02 F15M	4,5	0,028	0,034	0,046	0,075
M2	MM10-10010-B90PF-M02 F15M	4,5	0,026	0,030	0,042	0,065
M3	MM10-10010-B90PF-M02 F15M	3,5	0,020	0,024	0,034	0,055
M4	MM10-10010-B90PF-M02 F15M	2,5	0,018	0,022	0,030	0,046
M5	MM10-10010-B90PF-M02 F15M	2,5	0,018	0,022	0,030	0,046
K1	MM10-10010-B90PF-M02 F15M	4,5	0,028	0,034	0,046	0,075
K2	MM10-10010-B90PF-M02 F15M	4,5	0,026	0,030	0,042	0,065
K3	MM10-10010-B90PF-M02 F15M	4,5	0,026	0,030	0,042	0,065
K4	MM10-10010-B90PF-M02 F15M	4,5	0,026	0,030	0,042	0,065
K5	MM10-10010-B90PF-M02 F15M	4,5	0,024	0,028	0,038	0,060
K6	MM10-10010-B90PF-M02 F15M	4,5	0,026	0,030	0,042	0,065
K7	MM10-10010-B90PF-M02 F15M	4,5	0,024	0,028	0,038	0,060
N1	MM10-10010-B90PF-M02 F15M	4,5	0,036	0,044	0,060	0,095
N2	MM10-10010-B90PF-M02 F15M	4,5	0,036	0,044	0,060	0,095
N3	MM10-10010-B90PF-M02 F15M	4,5	0,036	0,044	0,060	0,095
N11	MM10-10010-B90PF-M02 F15M	4,5	0,036	0,044	0,060	0,095
S1	MM10-10010-B90PF-M02 F15M	2,5	0,018	0,022	0,030	0,046
S2	MM10-10010-B90PF-M02 F15M	2,5	0,018	0,022	0,030	0,046
S3	MM10-10010-B90PF-M02 F15M	2,5	0,017	0,020	0,028	0,044
S11	MM10-10010-B90PF-M02 F15M	3,0	0,020	0,024	0,034	0,055
S12	MM10-10010-B90PF-M02 F15M	3,0	0,020	0,024	0,034	0,055
S13	MM10-10010-B90PF-M02 F15M	2,5	0,018	0,022	0,030	0,046
H5	MM10-10010-B90PF-M02 F15M	3,5	0,018	0,020	0,028	0,046
H8	MM10-10010-B90PF-M02 F15M	3,0	0,013	0,016	0,022	0,034
H11	MM10-10010-B90PF-M02 F15M	3,5	0,018	0,020	0,028	0,046
H12	MM10-10010-B90PF-M02 F15M	3,5	0,018	0,020	0,028	0,046
H21	MM10-10010-B90PF-M02 F15M	3,0	0,013	0,016	0,022	0,034

SMG = Seco material group
f_z = mm/tooth
v_c= m/min
a_e/D_c = %
All cutting data are start values

MM10 Z2 – Copy Cutting data

	F15M					F30M					T60M				
SMG	100%	20%	10%	5%	2%	100%	20%	10%	5%	2%	100%	20%	10%	5%	2%
P1	415	540	600	660	740	315	415	460	500	560	255	335	370	405	450
P2	405	530	580	640	720	305	400	445	480	530	245	325	360	390	435
P3	350	460	500	550	620	265	350	385	420	465	215	285	310	340	380
P4	310	405	445	485	550	235	310	340	375	415	190	250	275	305	340
P5	295	385	425	465	520	225	295	330	355	400	185	240	265	290	320
P6	330	435	475	520	590	255	335	370	400	445	205	270	300	325	360
P7	315	410	450	495	550	240	315	350	380	420	195	255	280	305	340
P8	295	385	425	465	520	225	295	325	355	390	180	240	260	285	315
P11	305	395	440	480	540	235	305	340	365	410	190	250	275	295	330
M1	325	425	470	520	580	245	325	360	390	430	200	260	290	315	350
M2	265	345	385	420	470	205	270	295	320	360	165	215	240	260	290
M3	205	270	295	325	365	160	215	235	255	285	130	175	190	205	230
M4	155	205	225	245	275	125	170	180	195	220	100	140	145	160	175
M5	130	170	185	205	230	105	140	150	165	185	85	115	120	130	150
K1	320	420	465	510	570	240	320	355	380	425	195	260	285	310	345
K2	280	365	405	440	495	215	280	310	340	380	175	230	255	275	305
K3	235	310	340	375	420	185	240	265	285	320	150	195	215	230	260
K4	225	295	325	355	400	175	230	250	275	305	140	185	205	220	245
K5	135	175	195	215	240	105	135	155	165	185	85	110	125	135	150
K6	200	260	285	315	355	155	200	220	240	270	125	165	180	195	220
K7	175	225	250	275	310	135	175	195	215	235	110	140	160	175	190
N1	1225	1625	1775	1950	2200	910	1200	1325	1450	1600	730	970	1075	1175	1275
N2	1000	1300	1450	1575	1775	730	970	1075	1175	1275	590	780	860	950	1050
N3	670	870	960	1050	1175	490	650	710	780	860	395	520	570	630	690
N11	760	1000	1100	1200	1350	560	740	810	890	980	450	600	660	720	790
S1	70	95	105	115	130	60	80	85	90	100	47	65	70	75	85
S2	60	75	85	90	105	46	65	65	75	80	38	50	55	60	65
S3	50	65	75	80	90	41	55	60	65	70	33	45	47	50	60
S11	105	135	150	165	185	80	110	120	130	145	65	90	95	105	115
S12	60	80	85	95	105	47	65	70	75	85	38	50	55	60	70
S13	47	60	65	75	85	37	50	55	60	65	30	42	44	48	55
H5	60	80	85	95	105	48	65	70	75	85	—	—	—	—	—
H8	60	80	90	95	110	50	70	75	80	90	—	—	—	—	—
H11	80	100	110	120	135	60	80	90	100	110	—	—	—	—	—
H12	125	165	180	195	220	100	130	145	160	180	—	—	—	—	—
H21	60	80	90	95	110	50	70	75	80	90	—	—	—	—	—

MM10 High-Feed Insert selection

SMG		a_p	f_z 100%	f_z 70%	f_z 30%	f_z 20%
P1	MM10-10.50-HF-MD08 F30M	0,20	0,80	0,80	0,90	1,2
P2	MM10-10.50-HF-MD08 F30M	0,20	0,80	0,80	0,95	1,2
P3	MM10-10.50-HF-MD08 F30M	0,20	0,75	0,75	0,85	1,1
P4	MM10-10.50-HF-MD08 F30M	0,20	0,75	0,75	0,85	1,1
P5	MM10-10.50-HF-MD08 F30M	0,20	0,75	0,75	0,85	1,1
P6	MM10-10.50-HF-MD08 F30M	0,20	0,75	0,75	0,85	1,1
P7	MM10-10.50-HF-MD08 F30M	0,20	0,75	0,75	0,85	1,1
P8	MM10-10.50-HF-MD08 F30M	0,20	0,75	0,75	0,85	1,1
P11	MM10-10.50-HF-MD08 F30M	0,20	0,75	0,75	0,85	1,1
M1	MM10-10.50-HF-MD08 F30M	0,20	0,80	0,80	0,95	1,2
M2	MM10-10.50-HF-MD08 F30M	0,20	0,75	0,75	0,85	1,1
M3	MM10-10.50-HF-MD08 F30M	0,20	0,60	0,60	0,65	0,80
M4	MM10-10.50-HF-MD08 F30M	0,18	0,55	0,55	0,60	0,75
M5	MM10-10.50-HF-MD08 F30M	0,18	0,55	0,55	0,60	0,75
K1	MM10-10.50-HF-MD08 F30M	0,20	0,80	0,80	0,95	1,2
K2	MM10-10.50-HF-MD08 F30M	0,20	0,75	0,75	0,85	1,1
K3	MM10-10.50-HF-MD08 F30M	0,20	0,75	0,75	0,85	1,1
K4	MM10-10.50-HF-MD08 F30M	0,20	0,75	0,75	0,85	1,1
K5	MM10-10.50-HF-MD08 F30M	0,20	0,65	0,65	0,75	0,95
K6	MM10-10.50-HF-MD08 F30M	0,20	0,75	0,75	0,85	1,1
K7	MM10-10.50-HF-MD08 F30M	0,20	0,65	0,65	0,75	0,95
N1	MM10-10.50-HF-MD08 F30M	0,20	1,0	1,0	1,2	2,0
N2	MM10-10.50-HF-MD08 F30M	0,20	1,0	1,0	1,2	2,0
N3	MM10-10.50-HF-MD08 F30M	0,20	1,0	1,0	1,2	2,0
N11	MM10-10.50-HF-MD08 F30M	0,20	1,0	1,0	1,2	2,0
S1	MM10-10.50-HF-MD08 F30M	0,18	0,55	0,55	0,60	0,75
S2	MM10-10.50-HF-MD08 F30M	0,18	0,55	0,55	0,60	0,75
S3	MM10-10.50-HF-MD08 F30M	0,18	0,50	0,50	0,55	0,70
S11	MM10-10.50-HF-MD08 F30M	0,20	0,60	0,60	0,65	0,80
S12	MM10-10.50-HF-MD08 F30M	0,20	0,60	0,60	0,65	0,80
S13	MM10-10.50-HF-MD08 F30M	0,18	0,55	0,55	0,60	0,75
H5	MM10-10.50-HF-MD08 F15M	0,20	0,50	0,50	0,55	0,70
H8	MM10-10.50-HF-MD08 F15M	0,20	0,38	0,38	0,42	0,50
H11	MM10-10.50-HF-MD08 F15M	0,20	0,50	0,50	0,55	0,70
H12	MM10-10.50-HF-MD08 F15M	0,20	0,50	0,50	0,55	0,70
H21	MM10-10.50-HF-MD08 F15M	0,20	0,38	0,38	0,42	0,50

SMG = Seco material group
f_z = mm/tooth
v_c= m/min
a_e/D_c = %
All cutting data are start values

MM10 High-Feed Cutting data

	F15M				F30M			
SMG	100%	70%	30%	20%	100%	70%	30%	20%
P1	240	285	340	355	220	265	315	330
P2	235	275	330	345	215	260	305	320
P3	205	240	290	305	190	225	270	280
P4	180	215	255	265	165	200	235	250
P5	170	205	245	255	160	190	230	240
P6	190	230	275	290	180	215	255	270
P7	180	220	260	275	170	205	240	255
P8	170	205	240	255	160	190	225	235
P11	175	215	250	265	165	200	235	245
M1	190	225	265	280	175	210	250	260
M2	155	185	220	230	145	175	205	215
M3	125	150	175	185	115	140	165	170
M4	95	115	135	140	90	105	125	130
M5	80	95	115	120	75	90	105	110
K1	185	220	260	275	170	205	245	255
K2	160	195	235	245	150	180	215	225
K3	135	165	195	205	130	155	185	190
K4	130	160	190	195	120	145	175	185
K5	80	95	115	120	75	90	105	110
K6	115	140	165	175	105	130	155	160
K7	100	125	145	155	95	115	135	145
N1	690	830	970	990	640	770	900	920
N2	560	670	790	800	520	620	730	740
N3	370	445	520	530	345	415	485	495
N11	425	510	600	610	395	475	560	570
S1	45	55	65	65	42	49	60	60
S2	36	43	50	55	34	40	48	50
S3	31	37	45	47	29	35	42	43
S11	65	75	90	95	60	70	80	85
S12	36	44	50	55	34	40	48	50
S13	29	34	41	43	27	32	38	40
H5	37	45	55	55	35	42	49	50
H8	39	47	55	60	37	44	50	55
H11	48	55	70	70	45	55	65	65
H12	75	95	110	115	70	85	100	110
H21	39	47	55	60	37	44	50	55

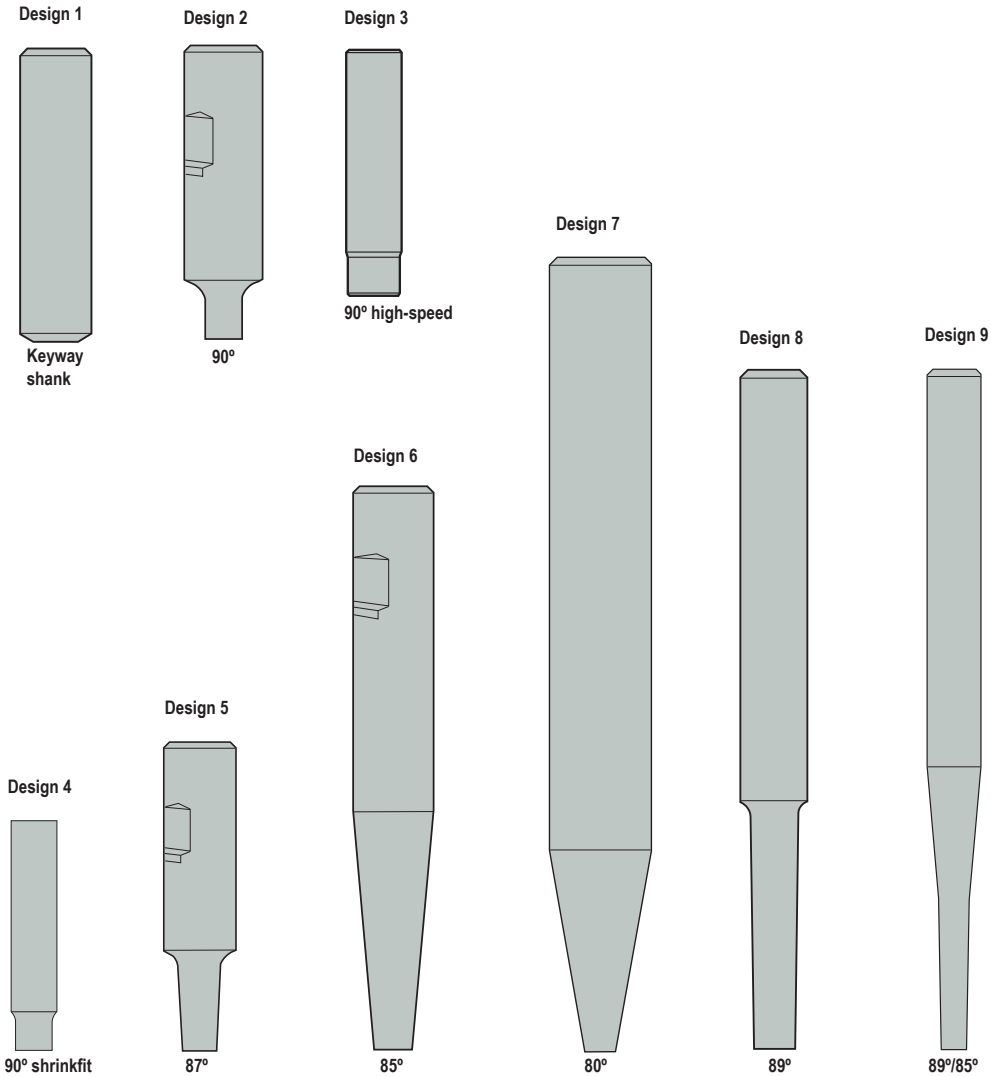
Design 1
Keyway shank
Design 2
90º
Design 3
90º high-speed
Design 7
80º
Design 8
89º
Design 9
89º/85º
Design 6
85º
Design 5
87º
Design 4
90º shrinkfit

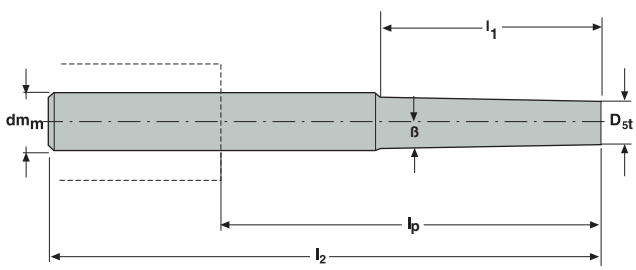
l1
dmm
ß
D5t
lp
l2

MM12

Design	Part No.	Connecting size	Dimensions in mm						KG	Spare part no.
			D_{5t}	dm_m	β°	l_1	l_2	l_p		
1	MM12- 16065.0-0000	MM12	11,4	16	60	0	65	17	0,1	1
3	MM12- 12055.0-0008	MM12	11,5	12	0	8,5	55	10	0,1	2
4	MM12- 12070.0-0008DS	MM12	11,5	12	0	8,5	70	25	0,1	3
2	MM12- 20080.3-0012	MM12	11,4	20	0	12	80	30	0,2	4
2	16095.0-0024DS	MM12	11,4	16	0	24	95	47	0,3	3
2	16115.0-0048DS	MM12	11,4	16	0	48	115	67	0,3	3
5	MM12- 20095.3-3027	MM12	11,4	20	3	27	95	45	0,2	4
5	16090.0-3044DS	MM12	11,4	16	3	43,9	90	42	0,3	3
6	MM12- 20150.3-5049	MM12	11,4	20	5	49,1	150	100	0,3	5
7	MM12- 32250.0-10058	MM12	11,4	32	10	58,4	250	190	1,3	5
8	MM12- 16170.0-1040	MM12	11,4	16	1	40	170	122	0,2	5
8	16120.0-1045DS	MM12	11,4	16	1	45	120	72	0,3	3
8	16170.0-1060	MM12	11,4	16	1	60	170	122	0,2	5
8	16170.0-1060DS	MM12	11,4	16	1	60	170	122	0,5	3
8	16170.0-1080	MM12	11,4	16	1	80	170	122	0,2	5
8	16170.0-1080DS	MM12	11,4	16	1	80	170	122	0,5	3
9*	MM12- 20250.0-1060DS	MM12	11,4	20	1	60	250	200	1,0	3

*For design 9, the l1 value is valid on the 89° tapered part

Spare Parts

Spare part no.	Tension screw	Sleeve
1		–
2		–
3		–
4		–
5		–

Please check availability in current price and stock-list.
Allen key H05-4 for sleeve to be ordered separately.

For wrench types, see insert pages 428 - 431.

Slot milling/ square shoulder milling

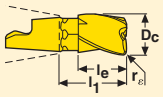

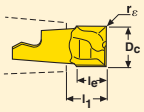

Insert type	Part No.	Dimensions in mm D_c	r_ε	l_e	l_1	Z_c*	Wrench	Coated Grades T60M	F15M	F30M	F40M
3-flute	MM12 -12015-A30-E04	12	0	15,5	19,9	3	MM0416			■	
3-flute	-12015-R05A30-M04	12	0,5	15,5	19,9	3	MM0416				■
3-flute	-12015-R10A30-E04	12	1,0	15,5	19,9	3	MM0416			■	
3-flute	-12015-R10A30-M04	12	1,0	15,5	19,9	3	MM0416				■
3-flute	-12015-R15A30-D04	12	1,5	15,5	19,9	3	MM0416			■	
3-flute	-12015-R20A30-M04	12	2,0	15,5	19,9	3	MM0416				■
3-flute	-12015-R30A30-E04	12	3,0	15,5	19,9	3	MM0416			■	
3-flute	-12015-R30A30-M04	12	3,0	15,5	19,9	3	MM0416				■
3-flute	-12015-R40A30-M04	12	4,0	15,5	19,9	3	MM0416				■
3-flute	MM12 -12715-A30-E04	12,7	0	15,5	19,9	3	MM0416			■	
3-flute	-12715-R08A30-D04	12,7	0,8	15,5	19,9	3	MM0416			■	
3-flute	-12715-R08A30-M04	12,7	0,8	15,5	19,9	3	MM0416				■
3-flute	-12715-R16A30-M04	12,7	1,6	15,5	19,9	3	MM0416				■
3-flute	-12715-R32A30-M04	12,7	3,175	15,5	19,9	3	MM0416				■
2-flute	MM12 -12008-M04	12	0	8,25	10,2	2	MM0612	■			
2-flute	-12008-R08-MD05	12	0,8	8,23	10,18	2	MM0612	■		■	
2-flute	-12008-R08P-M04	12	0,8	8,09	10,05	2	MM0612			■	
2-flute	-12008-R20-MD05	12	2,0	8,20	10,16	2	MM0612	■		■	
2-flute	-12008-R30-MD05	12	3,0	8,19	10,14	2	MM0612	■		■	
2-flute	MM12 -14009-M04	14	0	9,34	11,26	2	MM1420	■			
2-flute	-14009-R08-MD05	14	0,8	9,32	11,26	2	MM1420	■		■	
2-flute	MM12 -12708-M04	12,7	0	9,34	11,25	2	MM1420	■			
2-flute	-12708-R08-MD05	12,7	0,8	9,34	11,23	2	MM1420	■			
2-flute	-12708-R08P-M04	12,7	0,8	9,31	11,23	2	MM1420			■	
2-flute	-12708-R32-MD05	12,7	3,175	9,34	11,18	2	MM1420			■	
2-flute	MM12 -12008-R08A8-E04	12	0,8	8,1	10,15	2	MM0612	■		■	
2-flute	MM12 -14009-R08A8-E04	14	0,8	9,2	11,06	2	MM1420	■		■	
2-flute	MM12 -12708-R08A8-E04	12,7	0,8	8,1	10,14	2	MM1420			■	
Keyway 3-flute	MM12 -11715-R03A30-M04	11,7	0,3	15,5	19,9	3	MM0416				■
Keyway 2-flute	-11708T-R03-D05	11,7	0,3	8,25	10,18	2	MM0612	■			
Keyway 2-flute	MM12 -13709T-R03-D05	13,7	0,3	9,33	11,25	2	MM1420	■			

*Effective number of flutes

For Torque keys and torque values, see page

Centre drilling

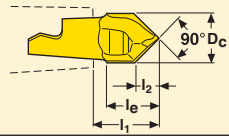

Insert type	Part No.	Dimensions in mm				Zc*	Wrench	Coated				
								Grades				
		Dc	le	l1	l2			T60M	F15M	F30M	F40M	
90°	MM12 -12006-C90-M04	12	12,65	14,64	5,65	2	MM0612	■				

Concave radius

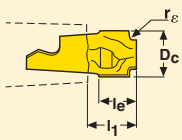

Insert type	Part No.	Dimensions in mm				Zc*	Wrench	Coated				
								Grades				
		Dc	rε	le	l1			T60M	F15M	F30M	F40M	
2-flute	MM12 -12010-CR10-MD05	12	1,0	10,57	12,14	2	MM0612	■				
2-flute	-12010-CR20-MD05	12	2,0	10,64	12,25	2	MM0612	■				
2-flute	-12010-CR30-MD05	12	3,0	10,63	12,20	2	MM0612	■				

*Effective number of flutes
For Torque keys and torque values, see page

Plunge milling

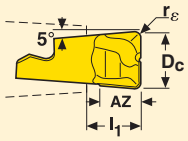

Insert type	Part No.	Dimensions in mm				Zc*	Wrench	Coated				
								Grades				
		Dc	rε	AZ	l1			T60M	F15M	F30M	F40M	
2-flute	MM12 -12008-R10-PL-MD05	12	1,0	8,5	10,2	2	MM0612			■		

Chamfering

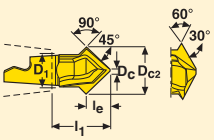

Insert type	Part No.	Dimensions in mm					Zc*	Wrench	Coated				
									Grades				
		Dc	Dc2	le	l1	R			T60M	F15M	F30M	F40M	
30°	MM12 -16016-D3020P-M02	1	16,0	4,3	15,2	11,5	2	MM1420		■			
45°	MM12 -16016-D4520P-M02	1	16,0	7,5	17,2	11,5	2	MM1420		■			

*Effective number of flutes

For Torque keys and torque values, see page

Precision inserts for semi-finishing in all materials

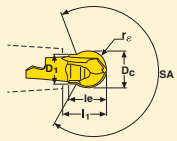

Insert type	Part No.	Dimensions in mm						Z_c*	Wrench	Coated Grades				
		D_c	r_ε	l_e	l_1	D_1	SA°			T60M	F15M	F30M	F40M	
2-flute	MM12 -14014-B120P-M05	14	7,0	14	15,45	12,0	242,0	2	MM1420			■		
2-flute	MM12 -16016-B120P-M07	16	8,0	16	17,46	12,0	263,0	2	MM1420			■		
2-flute	-16016-B120PF-M03	16	8,0	16	17,46	12,0	263,0	2	MM1420		■			

*Effective number of flutes
For Torque keys and torque values, see page

Copy milling

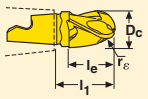

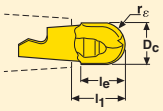

Insert type	Part No.	Dimensions in mm D_c	r_ε	l_e	l_1	Z_c*	Wrench	Coated Grades T60M	F15M	F30M	F40M	
3-flute	MM12 -12015-B90A30-E04	12	6,0	15,5	19,9	3	MM0416			■		
3-flute	-12015-B90A30-M04	12	6,0	15,5	19,9	3	MM0416				■	
3-flute	-12015-B90A30-D04	12	6,0	15,5	19,9	3	MM0416			■		
3-flute	-12715-B90A30-E04	12,7	6,35	15,35	19,75	3	MM0416			■		
3-flute	-12715-B90A30-M04	12,7	6,35	15,35	19,75	3	MM0416				■	
3-flute	-12715-B90A30-D04	12,7	6,35	15,35	19,75	3	MM0416			■		
2-flute	MM12 -12012-B90-MD05	12	6,0	12,28	14,12	2	MM0612	■		■		
2-flute	-12012-B90S-E05	12	6,0	12,28	14,12	2	MM0612			■		
2-flute	-14014-B90S-E05	14	7,0	14,12	15,92	2	MM1420			■		
2-flute	-12713-B90S-E05	12,7	6,35	12,63	14,47	2	MM1420			■		
2-flute	-12713-B90SF-E03	12,7	6,35	12,63	14,47	2	MM1420		■			
2-flute	-12012-B90P-M05	12	6,0	10,48	14,09	2	MM0612			■		
2-flute	-12713-B90P-M05	12,7	6,35	12,21	15,92	2	MM1420	■		■		
2-flute	MM12 -12012-B90PF-M02	12	6,0	10,48	14,09	2	MM0612		■			

*Effective number of flutes

For Torque keys and torque values, see page

High feed

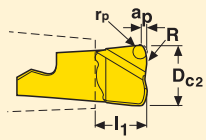

Insert type	Part No.	Dimensions in mm					Z_c*	Wrench	Coated				
									Grades				
		a_p	D_{c2}	r_p	R	l_1			T60M	F15M	F30M	F40M	
2-flute	**MM12 -12.60-HF-MD10**	0,51	12	1,21	6,5	10,25	2	MM0612		■	■		

*Effective number of flutes
For Torque keys and torque values, see page

MM12 – General Insert selection

SMG		a_p	f_z			
			100%	40%	20%	10%
P1	MM12-12015-R05A30-M04 F40M	2,5	0,055	0,060	0,070	0,095
P2	MM12-12015-R05A30-M04 F40M	2,5	0,060	0,060	0,075	0,10
P3	MM12-12015-R05A30-M04 F40M	2,5	0,055	0,055	0,070	0,095
P4	MM12-12015-R05A30-M04 F40M	2,5	0,055	0,055	0,070	0,090
P5	MM12-12015-R05A30-M04 F40M	2,5	0,055	0,055	0,065	0,090
P6	MM12-12015-R05A30-M04 F40M	2,5	0,050	0,055	0,065	0,090
P7	MM12-12015-R05A30-M04 F40M	2,5	0,050	0,055	0,065	0,090
P8	MM12-12015-R05A30-M04 F40M	2,5	0,055	0,055	0,070	0,095
P11	MM12-12015-R05A30-M04 F40M	2,5	0,050	0,055	0,065	0,090
M1	MM12-12015-R05A30-M04 F40M	2,5	0,060	0,060	0,075	0,10
M2	MM12-12015-R05A30-M04 F40M	2,5	0,055	0,055	0,065	0,090
M3	MM12-12015-R05A30-M04 F40M	2,0	0,042	0,044	0,055	0,070
M4	MM12-12015-R05A30-M04 F40M	1,6	0,038	0,038	0,048	0,065
M5	MM12-12015-R05A30-M04 F40M	1,6	0,038	0,038	0,048	0,065
K1	MM12-12015-R10A30-E04 F30M	2,5	0,060	0,065	0,075	0,10
K2	MM12-12015-R10A30-E04 F30M	2,5	0,055	0,055	0,070	0,095
K3	MM12-12015-R10A30-E04 F30M	2,5	0,055	0,055	0,070	0,095
K4	MM12-12015-R10A30-E04 F30M	2,5	0,055	0,055	0,070	0,095
K5	MM12-12015-R15A30-D04 F30M	2,5	0,055	0,055	0,070	0,090
K6	MM12-12015-R15A30-D04 F30M	2,5	0,060	0,060	0,075	0,10
K7	MM12-12015-R15A30-D04 F30M	2,5	0,055	0,055	0,070	0,090
N1	MM12-12015-R10A30-E04 F30M	2,5	0,080	0,080	0,10	0,13
N2	MM12-12015-R10A30-E04 F30M	2,5	0,080	0,080	0,10	0,13
N3	MM12-12015-R10A30-E04 F30M	2,5	0,080	0,080	0,10	0,13
N11	MM12-12015-R10A30-E04 F30M	2,5	0,080	0,080	0,10	0,13
S1	MM12-12015-R15A30-D04 F30M	1,6	0,050	0,050	0,065	0,085
S2	MM12-12015-R15A30-D04 F30M	1,6	0,050	0,050	0,065	0,085
S3	MM12-12015-R15A30-D04 F30M	1,6	0,046	0,048	0,060	0,080
S11	MM12-12015-R05A30-M04 F40M	1,9	0,044	0,044	0,055	0,070
S12	MM12-12015-R05A30-M04 F40M	1,9	0,044	0,044	0,055	0,070
S13	MM12-12015-R05A30-M04 F40M	1,6	0,038	0,038	0,048	0,065
H5	MM12-12015-R15A30-D04 F30M	2,0	0,044	0,046	0,055	0,075
H8	MM12-12015-R15A30-D04 F30M	1,9	0,034	0,036	0,044	0,060
H11	MM12-12015-R15A30-D04 F30M	2,0	0,044	0,046	0,055	0,075
H12	MM12-12015-R15A30-D04 F30M	2,0	0,044	0,046	0,055	0,075
H21	MM12-12015-R15A30-D04 F30M	1,9	0,034	0,036	0,044	0,060

SMG = Seco material group
f_z = mm/tooth
v_c= m/min
a_e/D_c = %
All cutting data are start values

MM12 – General Cutting data

	F30M				F40M				T60M			
SMG	100%	40%	20%	10%	100%	40%	20%	10%	100%	40%	20%	10%
P1	260	325	360	395	240	300	335	370	200	235	270	300
P2	255	315	355	385	235	290	330	360	190	225	265	295
P3	220	270	305	335	200	255	280	315	170	195	230	250
P4	190	245	270	295	180	225	250	275	150	175	200	225
P5	185	230	260	280	175	215	240	265	145	170	195	215
P6	210	260	290	320	195	240	270	300	160	190	220	245
P7	200	245	275	300	185	225	255	280	155	180	205	230
P8	185	230	255	280	170	215	235	265	140	165	195	210
P11	190	240	265	295	180	220	250	275	150	175	200	225
M1	205	255	285	310	190	235	265	290	155	180	210	235
M2	170	210	235	255	155	195	215	240	130	150	175	195
M3	135	165	185	205	125	155	175	190	100	115	135	155
M4	100	125	140	155	95	120	130	145	80	85	100	120
M5	85	105	120	130	80	100	110	120	65	70	85	100
K1	200	250	280	305	185	230	260	285	150	180	210	230
K2	175	220	245	270	165	205	230	255	135	160	185	205
K3	150	185	210	225	140	170	195	215	115	135	155	175
K4	145	180	200	215	135	165	185	205	110	130	150	165
K5	85	110	120	130	80	100	110	125	65	80	90	100
K6	125	155	175	190	115	145	165	180	95	115	130	145
K7	110	140	155	170	105	130	145	155	85	100	115	130
N1	740	930	1050	1150	690	870	970	1075	570	660	780	860
N2	600	750	850	930	550	700	790	870	460	530	630	690
N3	400	500	560	620	370	470	520	580	305	355	420	460
N11	455	570	640	710	420	530	600	660	350	405	480	530
S1	48	60	65	75	44	55	60	70	37	40	47	55
S2	38	48	55	60	36	45	50	55	30	32	38	45
S3	33	41	46	50	31	39	43	48	26	29	33	40
S11	65	85	95	105	60	80	90	95	50	60	70	80
S12	39	48	55	60	36	45	50	55	30	33	39	45
S13	31	38	43	47	29	36	40	44	24	26	30	36
H5	40	50	55	60	37	47	50	55	—	—	—	—
H8	41	50	60	65	39	48	55	60	—	—	—	—
H11	50	65	70	80	47	60	65	75	—	—	—	—
H12	80	105	115	125	75	95	105	115	—	—	—	—
H21	41	50	60	65	39	48	55	60	—	—	—	—

MM12 Z3 – Copy Insert selection – Roughing

SMG		a_p	f_z			
			100%	40%	20%	10%
P1	MM12-12015-B90A30-M04 F40M	2,5	0,080	0,080	0,10	0,13
P2	MM12-12015-B90A30-M04 F40M	2,5	0,080	0,085	0,10	0,14
P3	MM12-12015-B90A30-M04 F40M	2,5	0,075	0,080	0,095	0,13
P4	MM12-12015-B90A30-M04 F40M	2,5	0,075	0,075	0,095	0,13
P5	MM12-12015-B90A30-M04 F40M	2,5	0,075	0,075	0,090	0,12
P6	MM12-12015-B90A30-M04 F40M	2,5	0,075	0,075	0,090	0,12
P7	MM12-12015-B90A30-M04 F40M	2,5	0,075	0,075	0,090	0,12
P8	MM12-12015-B90A30-M04 F40M	2,5	0,075	0,080	0,095	0,13
P11	MM12-12015-B90A30-M04 F40M	2,5	0,075	0,075	0,090	0,12
M1	MM12-12015-B90A30-M04 F40M	2,5	0,080	0,085	0,10	0,14
M2	MM12-12015-B90A30-M04 F40M	2,5	0,075	0,075	0,090	0,12
M3	MM12-12015-B90A30-M04 F40M	2,0	0,060	0,060	0,075	0,10
M4	MM12-12015-B90A30-M04 F40M	1,6	0,050	0,055	0,065	0,085
M5	MM12-12015-B90A30-M04 F40M	1,6	0,050	0,055	0,065	0,085
K1	MM12-12015-B90A30-E04 F30M	2,5	0,080	0,085	0,10	0,14
K2	MM12-12015-B90A30-E04 F30M	2,5	0,075	0,075	0,090	0,12
K3	MM12-12015-B90A30-E04 F30M	2,5	0,075	0,075	0,090	0,12
K4	MM12-12015-B90A30-E04 F30M	2,5	0,075	0,075	0,090	0,12
K5	MM12-12015-B90A30-D04 F30M	2,5	0,065	0,070	0,085	0,11
K6	MM12-12015-B90A30-D04 F30M	2,5	0,075	0,075	0,090	0,12
K7	MM12-12015-B90A30-D04 F30M	2,5	0,065	0,070	0,085	0,11
N1	MM12-12015-B90A30-E04 F30M	2,5	0,10	0,11	0,13	0,17
N2	MM12-12015-B90A30-E04 F30M	2,5	0,10	0,11	0,13	0,17
N3	MM12-12015-B90A30-E04 F30M	2,5	0,10	0,11	0,13	0,17
N11	MM12-12015-B90A30-E04 F30M	2,5	0,10	0,11	0,13	0,17
S1	MM12-12015-B90A30-D04 F30M	1,6	0,050	0,055	0,065	0,085
S2	MM12-12015-B90A30-D04 F30M	1,6	0,050	0,055	0,065	0,085
S3	MM12-12015-B90A30-D04 F30M	1,6	0,048	0,048	0,060	0,080
S11	MM12-12015-B90A30-M04 F40M	1,9	0,060	0,060	0,075	0,10
S12	MM12-12015-B90A30-M04 F40M	1,9	0,060	0,060	0,075	0,10
S13	MM12-12015-B90A30-M04 F40M	1,6	0,050	0,055	0,065	0,085
H5	MM12-12015-B90A30-D04 F30M	2,0	0,050	0,050	0,065	0,085
H8	MM12-12015-B90A30-D04 F30M	1,9	0,038	0,040	0,048	0,065
H11	MM12-12015-B90A30-D04 F30M	2,0	0,050	0,050	0,065	0,085
H12	MM12-12015-B90A30-D04 F30M	2,0	0,050	0,050	0,065	0,085
H21	MM12-12015-B90A30-D04 F30M	1,9	0,038	0,040	0,048	0,065

SMG = Seco material group
f_z = mm/tooth
v_c= m/min
a_e/D_c = %
All cutting data are start values

MM12 Z3 – Copy Insert selection – Semi finishing

SMG		a_p	f_z			
			15%	10%	5%	2%
P1	MM12-12015-B90A30-E04 F30M	2,5	0,11	0,13	0,19	0,32
P2	MM12-12015-B90A30-E04 F30M	2,5	0,11	0,14	0,19	0,32
P3	MM12-12015-B90A30-E04 F30M	2,5	0,11	0,13	0,18	0,30
P4	MM12-12015-B90A30-E04 F30M	2,5	0,11	0,13	0,18	0,30
P5	MM12-12015-B90A30-E04 F30M	2,5	0,10	0,12	0,17	0,28
P6	MM12-12015-B90A30-E04 F30M	2,5	0,10	0,12	0,17	0,28
P7	MM12-12015-B90A30-E04 F30M	2,5	0,10	0,12	0,17	0,28
P8	MM12-12015-B90A30-E04 F30M	2,5	0,11	0,13	0,18	0,30
P11	MM12-12015-B90A30-E04 F30M	2,5	0,10	0,12	0,17	0,28
M1	MM12-12015-B90A30-E04 F30M	2,5	0,11	0,14	0,19	0,32
M2	MM12-12015-B90A30-E04 F30M	2,5	0,10	0,12	0,17	0,28
M3	MM12-12015-B90A30-E04 F30M	2,0	0,085	0,10	0,14	0,22
M4	MM12-12015-B90A30-E04 F30M	1,6	0,070	0,085	0,12	0,19
M5	MM12-12015-B90A30-E04 F30M	1,6	0,070	0,085	0,12	0,19
K1	MM12-12015-B90A30-E04 F30M	2,5	0,11	0,14	0,19	0,32
K2	MM12-12015-B90A30-E04 F30M	2,5	0,10	0,12	0,17	0,28
K3	MM12-12015-B90A30-E04 F30M	2,5	0,10	0,12	0,17	0,28
K4	MM12-12015-B90A30-E04 F30M	2,5	0,10	0,12	0,17	0,28
K5	MM12-12015-B90A30-E04 F30M	2,5	0,095	0,11	0,16	0,26
K6	MM12-12015-B90A30-E04 F30M	2,5	0,10	0,12	0,17	0,28
K7	MM12-12015-B90A30-E04 F30M	2,5	0,095	0,11	0,16	0,26
N1	MM12-12015-B90A30-E04 F30M	2,5	0,15	0,17	0,24	0,42
N2	MM12-12015-B90A30-E04 F30M	2,5	0,15	0,17	0,24	0,42
N3	MM12-12015-B90A30-E04 F30M	2,5	0,15	0,17	0,24	0,42
N11	MM12-12015-B90A30-E04 F30M	2,5	0,15	0,17	0,24	0,42
S1	MM12-12015-B90A30-E04 F30M	1,6	0,070	0,085	0,12	0,19
S2	MM12-12015-B90A30-E04 F30M	1,6	0,070	0,085	0,12	0,19
S3	MM12-12015-B90A30-D04 F30M	1,6	0,065	0,080	0,11	0,18
S11	MM12-12015-B90A30-E04 F30M	1,9	0,085	0,10	0,14	0,22
S12	MM12-12015-B90A30-E04 F30M	1,9	0,085	0,10	0,14	0,22
S13	MM12-12015-B90A30-E04 F30M	1,6	0,070	0,085	0,12	0,19
H5	MM12-12015-B90A30-E04 F30M	2,0	0,070	0,085	0,12	0,19
H8	MM12-12015-B90A30-E04 F30M	1,9	0,055	0,065	0,090	0,14
H11	MM12-12015-B90A30-E04 F30M	2,0	0,070	0,085	0,12	0,19
H12	MM12-12015-B90A30-E04 F30M	2,0	0,070	0,085	0,12	0,19
H21	MM12-12015-B90A30-E04 F30M	1,9	0,055	0,065	0,090	0,14

SMG = Seco material group
f_z = mm/tooth
v_c= m/min
a_e/D_c = %
All cutting data are start values

MM12 Z3 – Copy Insert selection – Finishing

SMG		a_p	f_z			
			15%	10%	5%	2%
P1	MM12-12015-B90A30-E04 F30M	2,5	0,11	0,13	0,19	0,32
P2	MM12-12015-B90A30-E04 F30M	2,5	0,11	0,14	0,19	0,32
P3	MM12-12015-B90A30-E04 F30M	2,5	0,11	0,13	0,18	0,30
P4	MM12-12015-B90A30-E04 F30M	2,5	0,11	0,13	0,18	0,30
P5	MM12-12015-B90A30-E04 F30M	2,5	0,10	0,12	0,17	0,28
P6	MM12-12015-B90A30-E04 F30M	2,5	0,10	0,12	0,17	0,28
P7	MM12-12015-B90A30-E04 F30M	2,5	0,10	0,12	0,17	0,28
P8	MM12-12015-B90A30-E04 F30M	2,5	0,11	0,13	0,18	0,30
P11	MM12-12015-B90A30-E04 F30M	2,5	0,10	0,12	0,17	0,28
M1	MM12-12015-B90A30-E04 F30M	2,5	0,11	0,14	0,19	0,32
M2	MM12-12015-B90A30-E04 F30M	2,5	0,10	0,12	0,17	0,28
M3	MM12-12015-B90A30-E04 F30M	2,0	0,085	0,10	0,14	0,22
M4	MM12-12015-B90A30-E04 F30M	1,6	0,070	0,085	0,12	0,19
M5	MM12-12015-B90A30-E04 F30M	1,6	0,070	0,085	0,12	0,19
K1	MM12-12015-B90A30-E04 F30M	2,5	0,11	0,14	0,19	0,32
K2	MM12-12015-B90A30-E04 F30M	2,5	0,10	0,12	0,17	0,28
K3	MM12-12015-B90A30-E04 F30M	2,5	0,10	0,12	0,17	0,28
K4	MM12-12015-B90A30-E04 F30M	2,5	0,10	0,12	0,17	0,28
K5	MM12-12015-B90A30-E04 F30M	2,5	0,095	0,11	0,16	0,26
K6	MM12-12015-B90A30-E04 F30M	2,5	0,10	0,12	0,17	0,28
K7	MM12-12015-B90A30-E04 F30M	2,5	0,095	0,11	0,16	0,26
N1	MM12-12015-B90A30-E04 F30M	2,5	0,15	0,17	0,24	0,42
N2	MM12-12015-B90A30-E04 F30M	2,5	0,15	0,17	0,24	0,42
N3	MM12-12015-B90A30-E04 F30M	2,5	0,15	0,17	0,24	0,42
N11	MM12-12015-B90A30-E04 F30M	2,5	0,15	0,17	0,24	0,42
S1	MM12-12015-B90A30-E04 F30M	1,6	0,070	0,085	0,12	0,19
S2	MM12-12015-B90A30-E04 F30M	1,6	0,070	0,085	0,12	0,19
S3	MM12-12015-B90A30-E04 F30M	1,6	0,065	0,080	0,11	0,18
S11	MM12-12015-B90A30-E04 F30M	1,9	0,085	0,10	0,14	0,22
S12	MM12-12015-B90A30-E04 F30M	1,9	0,085	0,10	0,14	0,22
S13	MM12-12015-B90A30-E04 F30M	1,6	0,070	0,085	0,12	0,19
H5	MM12-12015-B90A30-E04 F30M	2,0	0,070	0,085	0,12	0,19
H8	MM12-12015-B90A30-E04 F30M	1,9	0,055	0,065	0,090	0,14
H11	MM12-12015-B90A30-E04 F30M	2,0	0,070	0,085	0,12	0,19
H12	MM12-12015-B90A30-E04 F30M	2,0	0,070	0,085	0,12	0,19
H21	MM12-12015-B90A30-E04 F30M	1,9	0,055	0,065	0,090	0,14

SMG = Seco material group
f_z = mm/tooth
v_c= m/min
a_e/D_c = %
All cutting data are start values

MM12 Z3 – Copy Cutting data

	F30M					F40M				
SMG	100%	20%	10%	5%	2%	100%	20%	10%	5%	2%
P1	315	410	455	500	560	300	390	430	475	530
P2	305	400	440	480	530	290	380	420	455	510
P3	265	345	380	420	465	250	330	360	400	445
P4	235	305	340	375	410	225	290	325	355	390
P5	225	295	325	355	400	215	280	310	340	380
P6	250	330	365	400	450	240	315	350	380	430
P7	240	310	345	375	425	225	295	330	360	405
P8	220	290	320	350	395	210	275	305	335	375
P11	230	305	335	365	410	220	290	320	350	390
M1	245	320	355	385	430	235	305	340	370	410
M2	200	265	295	320	360	190	250	280	305	345
M3	160	210	235	255	285	155	200	220	245	270
M4	125	170	180	195	220	115	160	170	185	205
M5	105	140	150	160	180	100	135	140	155	175
K1	240	315	350	380	425	230	300	335	360	405
K2	215	280	310	340	380	205	265	295	320	360
K3	180	235	260	285	320	170	225	250	270	305
K4	170	225	250	275	305	165	215	240	260	290
K5	105	135	150	165	185	100	130	145	155	175
K6	150	200	220	240	270	145	190	210	230	255
K7	135	175	195	210	240	125	165	185	200	225
N1	900	1175	1325	1425	1600	860	1125	1250	1375	1525
N2	730	960	1050	1150	1300	690	910	1000	1100	1225
N3	485	640	710	770	860	465	610	670	730	820
N11	560	730	810	880	990	530	690	770	840	940
S1	60	80	85	90	100	55	75	80	85	95
S2	46	65	65	75	80	44	60	65	70	80
S3	40	55	60	65	70	38	50	55	60	70
S11	80	110	120	130	145	75	105	110	125	135
S12	47	65	70	75	85	45	60	65	70	80
S13	37	50	55	60	65	35	48	50	55	65
H5	48	65	70	75	85	46	60	65	75	80
H8	50	65	75	80	90	48	65	70	75	85
H11	60	80	90	100	110	60	75	85	95	105
H12	100	130	145	160	175	95	125	135	150	170
H21	50	65	75	80	90	48	65	70	75	85

MM12 Z2 – Copy Insert selection – Roughing

SMG		a_p	f_z			
			100%	40%	20%	10%
P1	MM12-12012-B90S-E05 F30M	5,0	0,10	0,10	0,12	0,17
P2	MM12-12012-B90S-E05 F30M	5,0	0,10	0,10	0,13	0,17
P3	MM12-12012-B90S-E05 F30M	5,0	0,095	0,10	0,12	0,16
P4	MM12-12012-B90-MD05 F30M	5,0	0,095	0,095	0,12	0,16
P5	MM12-12012-B90-MD05 F30M	5,0	0,090	0,095	0,12	0,16
P6	MM12-12012-B90-MD05 F30M	5,0	0,090	0,095	0,11	0,15
P7	MM12-12012-B90-MD05 F30M	5,0	0,090	0,095	0,11	0,15
P8	MM12-12012-B90-MD05 F30M	5,0	0,095	0,10	0,12	0,16
P11	MM12-12012-B90-MD05 F30M	5,0	0,090	0,095	0,11	0,15
M1	MM12-12012-B90S-E05 F30M	5,0	0,10	0,10	0,13	0,17
M2	MM12-12012-B90S-E05 F30M	5,0	0,090	0,095	0,12	0,16
M3	MM12-12012-B90S-E05 F30M	4,0	0,075	0,075	0,090	0,12
M4	MM12-12012-B90-MD05 F30M	3,0	0,065	0,065	0,080	0,11
M5	MM12-12012-B90-MD05 F30M	3,0	0,065	0,065	0,080	0,11
K1	MM12-12012-B90S-E05 F30M	5,0	0,10	0,10	0,13	0,17
K2	MM12-12012-B90S-E05 F30M	5,0	0,090	0,095	0,12	0,16
K3	MM12-12012-B90S-E05 F30M	5,0	0,090	0,095	0,12	0,16
K4	MM12-12012-B90S-E05 F30M	5,0	0,090	0,095	0,12	0,16
K5	MM12-12012-B90-MD05 F30M	5,0	0,085	0,085	0,10	0,14
K6	MM12-12012-B90-MD05 F30M	5,0	0,090	0,095	0,12	0,16
K7	MM12-12012-B90-MD05 F30M	5,0	0,085	0,085	0,10	0,14
N1	MM12-12012-B90S-E05 F30M	5,0	0,13	0,13	0,16	0,22
N2	MM12-12012-B90S-E05 F30M	5,0	0,13	0,13	0,16	0,22
N3	MM12-12012-B90S-E05 F30M	5,0	0,13	0,13	0,16	0,22
N11	MM12-12012-B90S-E05 F30M	5,0	0,13	0,13	0,16	0,22
S1	MM12-12012-B90-MD05 F30M	3,0	0,065	0,065	0,080	0,11
S2	MM12-12012-B90-MD05 F30M	3,0	0,065	0,065	0,080	0,11
S3	MM12-12012-B90-MD05 F30M	3,0	0,060	0,060	0,075	0,10
S11	MM12-12012-B90-MD05 F30M	3,5	0,075	0,075	0,090	0,12
S12	MM12-12012-B90-MD05 F30M	3,5	0,075	0,075	0,090	0,12
S13	MM12-12012-B90-MD05 F30M	3,0	0,065	0,065	0,080	0,11
H5	MM12-12012-B90-MD05 F30M	4,0	0,065	0,065	0,080	0,11
H8	MM12-12012-B90-MD05 F30M	3,5	0,048	0,048	0,060	0,080
H11	MM12-12012-B90-MD05 F30M	4,0	0,065	0,065	0,080	0,11
H12	MM12-12012-B90-MD05 F30M	4,0	0,065	0,065	0,080	0,11
H21	MM12-12012-B90-MD05 F30M	3,5	0,048	0,048	0,060	0,080

SMG = Seco material group
f_z = mm/tooth
v_c= m/min
a_e/D_c = %
All cutting data are start values

MM12 Z2 – Copy Insert selection – Semi finishing

SMG		a_p	f_z			
			15%	10%	5%	2%
P1	MM12-12012-B90P-M05 F30M	5,0	0,14	0,17	0,24	0,40
P2	MM12-12012-B90P-M05 F30M	5,0	0,14	0,17	0,24	0,40
P3	MM12-12012-B90P-M05 F30M	5,0	0,13	0,16	0,22	0,38
P4	MM12-12012-B90P-M05 F30M	5,0	0,13	0,16	0,22	0,38
P5	MM12-12012-B90P-M05 F30M	5,0	0,13	0,16	0,22	0,36
P6	MM12-12012-B90P-M05 F30M	5,0	0,13	0,15	0,22	0,36
P7	MM12-12012-B90P-M05 F30M	5,0	0,13	0,15	0,22	0,36
P8	MM12-12012-B90P-M05 F30M	5,0	0,13	0,16	0,22	0,38
P11	MM12-12012-B90P-M05 F30M	5,0	0,13	0,15	0,22	0,36
M1	MM12-12012-B90P-M05 F30M	5,0	0,14	0,17	0,24	0,40
M2	MM12-12012-B90P-M05 F30M	5,0	0,13	0,16	0,22	0,36
M3	MM12-12012-B90P-M05 F30M	4,0	0,10	0,12	0,17	0,28
M4	MM12-12012-B90P-M05 F30M	3,0	0,090	0,11	0,15	0,24
M5	MM12-12012-B90P-M05 F30M	3,0	0,090	0,11	0,15	0,24
K1	MM12-12012-B90P-M05 F30M	5,0	0,14	0,17	0,24	0,40
K2	MM12-12012-B90P-M05 F30M	5,0	0,13	0,16	0,22	0,36
K3	MM12-12012-B90P-M05 F30M	5,0	0,13	0,16	0,22	0,36
K4	MM12-12012-B90P-M05 F30M	5,0	0,13	0,16	0,22	0,36
K5	MM12-12012-B90P-M05 F30M	5,0	0,12	0,14	0,20	0,32
K6	MM12-12012-B90P-M05 F30M	5,0	0,13	0,16	0,22	0,36
K7	MM12-12012-B90P-M05 F30M	5,0	0,12	0,14	0,20	0,32
N1	MM12-12012-B90P-M05 F30M	5,0	0,18	0,22	0,32	0,55
N2	MM12-12012-B90P-M05 F30M	5,0	0,18	0,22	0,32	0,55
N3	MM12-12012-B90P-M05 F30M	5,0	0,18	0,22	0,32	0,55
N11	MM12-12012-B90P-M05 F30M	5,0	0,18	0,22	0,32	0,55
S1	MM12-12012-B90P-M05 F30M	3,0	0,090	0,11	0,15	0,24
S2	MM12-12012-B90P-M05 F30M	3,0	0,090	0,11	0,15	0,24
S3	MM12-12012-B90P-M05 F30M	3,0	0,085	0,10	0,14	0,22
S11	MM12-12012-B90P-M05 F30M	3,5	0,10	0,12	0,17	0,28
S12	MM12-12012-B90P-M05 F30M	3,5	0,10	0,12	0,17	0,28
S13	MM12-12012-B90P-M05 F30M	3,0	0,090	0,11	0,15	0,24
H5	MM12-12012-B90P-M05 F30M	4,0	0,090	0,11	0,15	0,24
H8	MM12-12012-B90P-M05 F30M	3,5	0,065	0,080	0,11	0,18
H11	MM12-12012-B90P-M05 F30M	4,0	0,090	0,11	0,15	0,24
H12	MM12-12012-B90P-M05 F30M	4,0	0,090	0,11	0,15	0,24
H21	MM12-12012-B90P-M05 F30M	3,5	0,065	0,080	0,11	0,18

SMG = Seco material group
f_z = mm/tooth
v_c= m/min
a_e/D_c = %
All cutting data are start values

MM12 Z2 – Copy Insert selection – Finishing

SMG		a_p	f_z			
			15%	10%	5%	2%
P1	MM12-12012-B90PF-M02 F15M	5,0	0,028	0,034	0,046	0,070
P2	MM12-12012-B90PF-M02 F15M	5,0	0,028	0,034	0,046	0,075
P3	MM12-12012-B90PF-M02 F15M	5,0	0,026	0,032	0,044	0,070
P4	MM12-12012-B90PF-M02 F15M	5,0	0,026	0,032	0,044	0,070
P5	MM12-12012-B90PF-M02 F15M	5,0	0,026	0,030	0,042	0,065
P6	MM12-12012-B90PF-M02 F15M	5,0	0,026	0,030	0,042	0,065
P7	MM12-12012-B90PF-M02 F15M	5,0	0,026	0,030	0,042	0,065
P8	MM12-12012-B90PF-M02 F15M	5,0	0,026	0,032	0,044	0,070
P11	MM12-12012-B90PF-M02 F15M	5,0	0,026	0,030	0,042	0,065
M1	MM12-12012-B90PF-M02 F15M	5,0	0,028	0,034	0,046	0,075
M2	MM12-12012-B90PF-M02 F15M	5,0	0,026	0,030	0,042	0,065
M3	MM12-12012-B90PF-M02 F15M	4,0	0,020	0,024	0,034	0,055
M4	MM12-12012-B90PF-M02 F15M	3,0	0,018	0,022	0,030	0,046
M5	MM12-12012-B90PF-M02 F15M	3,0	0,018	0,022	0,030	0,046
K1	MM12-12012-B90PF-M02 F15M	5,0	0,028	0,034	0,046	0,075
K2	MM12-12012-B90PF-M02 F15M	5,0	0,026	0,030	0,042	0,065
K3	MM12-12012-B90PF-M02 F15M	5,0	0,026	0,030	0,042	0,065
K4	MM12-12012-B90PF-M02 F15M	5,0	0,026	0,030	0,042	0,065
K5	MM12-12012-B90PF-M02 F15M	5,0	0,024	0,028	0,038	0,060
K6	MM12-12012-B90PF-M02 F15M	5,0	0,026	0,030	0,042	0,065
K7	MM12-12012-B90PF-M02 F15M	5,0	0,024	0,028	0,038	0,060
N1	MM12-12012-B90PF-M02 F15M	5,0	0,036	0,044	0,060	0,095
N2	MM12-12012-B90PF-M02 F15M	5,0	0,036	0,044	0,060	0,095
N3	MM12-12012-B90PF-M02 F15M	5,0	0,036	0,044	0,060	0,095
N11	MM12-12012-B90PF-M02 F15M	5,0	0,036	0,044	0,060	0,095
S1	MM12-12012-B90PF-M02 F15M	3,0	0,018	0,022	0,030	0,046
S2	MM12-12012-B90PF-M02 F15M	3,0	0,018	0,022	0,030	0,046
S3	MM12-12012-B90PF-M02 F15M	3,0	0,017	0,020	0,028	0,044
S11	MM12-12012-B90PF-M02 F15M	3,5	0,020	0,024	0,034	0,055
S12	MM12-12012-B90PF-M02 F15M	3,5	0,020	0,024	0,034	0,055
S13	MM12-12012-B90PF-M02 F15M	3,0	0,018	0,022	0,030	0,046
H5	MM12-12012-B90PF-M02 F15M	4,0	0,018	0,020	0,028	0,046
H8	MM12-12012-B90PF-M02 F15M	3,5	0,013	0,016	0,022	0,034
H11	MM12-12012-B90PF-M02 F15M	4,0	0,018	0,020	0,028	0,046
H12	MM12-12012-B90PF-M02 F15M	4,0	0,018	0,020	0,028	0,046
H21	MM12-12012-B90PF-M02 F15M	3,5	0,013	0,016	0,022	0,034

SMG = Seco material group
f_z = mm/tooth
v_c= m/min
a_e/D_c = %
All cutting data are start values

MM12 Z2 – Copy Cutting data

	F15M					F30M					T60M				
SMG	100%	20%	10%	5%	2%	100%	20%	10%	5%	2%	100%	20%	10%	5%	2%
P1	415	540	600	660	740	300	390	435	475	530	245	315	355	385	425
P2	405	530	580	640	720	295	380	420	460	510	235	310	340	375	415
P3	350	460	500	550	620	255	335	365	405	445	205	270	295	330	360
P4	310	405	445	485	550	225	295	330	355	395	180	240	265	290	320
P5	295	385	425	465	520	215	280	315	340	380	175	230	255	275	310
P6	330	435	475	520	590	240	315	350	380	430	195	255	285	310	345
P7	315	410	450	495	550	225	300	330	360	405	185	240	270	290	325
P8	295	385	425	465	520	215	280	310	340	375	175	230	250	275	305
P11	305	395	440	480	540	220	290	320	350	390	180	235	260	285	315
M1	325	425	470	520	580	235	310	340	370	415	190	250	275	300	335
M2	265	345	385	420	470	195	255	280	305	345	155	205	230	250	280
M3	205	270	295	325	365	155	205	225	245	275	125	170	180	200	220
M4	155	205	225	245	275	120	165	170	190	210	95	135	140	150	170
M5	130	170	185	205	230	100	135	145	155	175	80	110	115	125	145
K1	320	420	465	510	570	230	305	335	365	405	190	245	270	295	330
K2	280	365	405	440	495	205	270	295	325	360	165	215	240	260	295
K3	235	310	340	375	420	170	225	250	275	305	140	185	205	220	250
K4	225	295	325	355	400	165	215	240	260	290	135	175	195	210	235
K5	135	175	195	215	240	100	130	145	160	175	80	105	115	130	145
K6	200	260	285	315	355	145	190	210	230	255	115	155	170	185	210
K7	175	225	250	275	305	130	170	185	205	225	105	135	150	165	185
N1	1225	1625	1775	1950	2200	860	1125	1250	1375	1500	690	920	1000	1100	1225
N2	1000	1300	1450	1575	1775	690	920	1000	1100	1200	560	740	820	890	980
N3	670	870	960	1050	1175	460	610	670	740	810	375	495	540	600	650
N11	760	1000	1100	1200	1350	530	700	770	840	920	425	570	620	680	750
S1	70	95	105	115	130	55	75	80	90	100	45	60	65	70	80
S2	60	75	85	90	105	45	60	65	70	80	36	50	50	55	65
S3	50	65	75	80	90	39	55	55	60	70	32	44	46	50	55
S11	105	135	150	165	185	80	105	115	125	140	65	85	90	100	110
S12	60	80	85	95	105	45	60	65	70	80	37	50	55	60	65
S13	47	60	65	75	85	36	50	50	55	65	29	40	42	46	50
H5	60	80	85	95	105	47	60	70	75	80	—	—	—	—	—
H8	60	80	90	95	110	49	65	70	80	85	—	—	—	—	—
H11	80	100	110	120	135	60	80	85	95	105	—	—	—	—	—
H12	125	165	180	195	220	95	130	140	155	170	—	—	—	—	—
H21	60	80	90	95	110	49	65	70	80	85	—	—	—	—	—

MM12 High-Feed Insert selection

SMG		a_p	f_z			
			100%	70%	30%	20%
P1	MM12-12.60-HF-MD10 F30M	0,26	1,0	1,0	1,1	1,5
P2	MM12-12.60-HF-MD10 F30M	0,26	1,0	1,0	1,2	1,6
P3	MM12-12.60-HF-MD10 F30M	0,26	0,95	0,95	1,1	1,4
P4	MM12-12.60-HF-MD10 F30M	0,26	0,95	0,95	1,1	1,4
P5	MM12-12.60-HF-MD10 F30M	0,26	0,90	0,90	1,0	1,4
P6	MM12-12.60-HF-MD10 F30M	0,26	0,90	0,90	1,0	1,3
P7	MM12-12.60-HF-MD10 F30M	0,26	0,90	0,90	1,0	1,3
P8	MM12-12.60-HF-MD10 F30M	0,26	0,95	0,95	1,1	1,4
P11	MM12-12.60-HF-MD10 F30M	0,26	0,90	0,90	1,0	1,3
M1	MM12-12.60-HF-MD10 F30M	0,26	1,0	1,0	1,2	1,6
M2	MM12-12.60-HF-MD10 F30M	0,26	0,90	0,90	1,0	1,4
M3	MM12-12.60-HF-MD10 F30M	0,26	0,75	0,75	0,85	1,0
M4	MM12-12.60-HF-MD10 F30M	0,20	0,75	0,75	0,85	1,0
M5	MM12-12.60-HF-MD10 F30M	0,20	0,75	0,75	0,85	1,0
K1	MM12-12.60-HF-MD10 F30M	0,26	1,0	1,0	1,2	1,6
K2	MM12-12.60-HF-MD10 F30M	0,26	0,90	0,90	1,0	1,4
K3	MM12-12.60-HF-MD10 F30M	0,26	0,90	0,90	1,0	1,4
K4	MM12-12.60-HF-MD10 F30M	0,26	0,90	0,90	1,0	1,4
K5	MM12-12.60-HF-MD10 F30M	0,26	0,85	0,85	0,95	1,2
K6	MM12-12.60-HF-MD10 F30M	0,26	0,90	0,90	1,0	1,4
K7	MM12-12.60-HF-MD10 F30M	0,26	0,85	0,85	0,95	1,2
N1	MM12-12.60-HF-MD10 F30M	0,26	1,3	1,3	1,5	2,4
N2	MM12-12.60-HF-MD10 F30M	0,26	1,3	1,3	1,5	2,4
N3	MM12-12.60-HF-MD10 F30M	0,26	1,3	1,3	1,5	2,4
N11	MM12-12.60-HF-MD10 F30M	0,26	1,3	1,3	1,5	2,4
S1	MM12-12.60-HF-MD10 F30M	0,20	0,75	0,75	0,85	1,0
S2	MM12-12.60-HF-MD10 F30M	0,20	0,75	0,75	0,85	1,0
S3	MM12-12.60-HF-MD10 F30M	0,20	0,70	0,70	0,75	0,95
S11	MM12-12.60-HF-MD10 F30M	0,24	0,75	0,75	0,85	1,1
S12	MM12-12.60-HF-MD10 F30M	0,24	0,75	0,75	0,85	1,1
S13	MM12-12.60-HF-MD10 F30M	0,20	0,75	0,75	0,85	1,0
H5	MM12-12.60-HF-MD10 F15M	0,26	0,65	0,65	0,70	0,85
H8	MM12-12.60-HF-MD10 F15M	0,24	0,50	0,50	0,55	0,65
H11	MM12-12.60-HF-MD10 F15M	0,26	0,65	0,65	0,70	0,85
H12	MM12-12.60-HF-MD10 F15M	0,26	0,65	0,65	0,70	0,85
H21	MM12-12.60-HF-MD10 F15M	0,24	0,50	0,50	0,55	0,65

SMG = Seco material group
f_z = mm/tooth
v_c= m/min
a_e/D_c = %
All cutting data are start values

MM12 High-Feed Cutting data

	F15M				F30M			
SMG	100%	70%	30%	20%	100%	70%	30%	20%
P1	225	270	325	340	210	250	305	315
P2	220	265	310	325	205	245	290	300
P3	190	230	275	285	175	215	255	265
P4	170	205	240	255	160	190	225	235
P5	160	195	235	240	150	180	220	225
P6	180	220	265	270	170	205	245	255
P7	170	210	250	255	160	195	230	240
P8	160	195	230	240	150	180	215	220
P11	165	200	240	250	155	190	225	230
M1	175	215	250	260	165	200	235	245
M2	145	175	210	220	135	165	195	205
M3	115	140	165	175	110	130	155	165
M4	90	110	130	135	85	100	120	125
M5	75	90	110	115	70	85	100	105
K1	175	210	245	255	160	195	230	240
K2	155	185	225	230	145	175	205	215
K3	130	160	190	195	120	145	175	180
K4	125	150	180	185	115	140	165	175
K5	75	90	110	115	70	85	100	105
K6	110	130	160	165	100	125	150	150
K7	100	115	140	145	90	110	130	135
N1	650	780	930	910	600	720	860	840
N2	520	630	750	730	485	580	700	680
N3	350	420	500	490	325	390	465	455
N11	395	480	570	560	370	445	530	520
S1	42	50	60	65	39	47	55	60
S2	34	41	49	50	32	38	45	48
S3	30	36	43	45	28	33	40	42
S11	60	70	85	90	55	65	80	85
S12	34	41	49	50	32	38	45	48
S13	27	33	39	41	25	30	36	38
H5	35	42	50	55	33	39	47	50
H8	38	45	55	55	35	42	50	55
H11	45	55	65	70	42	50	60	65
H12	75	85	105	110	70	80	100	105
H21	38	45	55	55	35	42	50	55

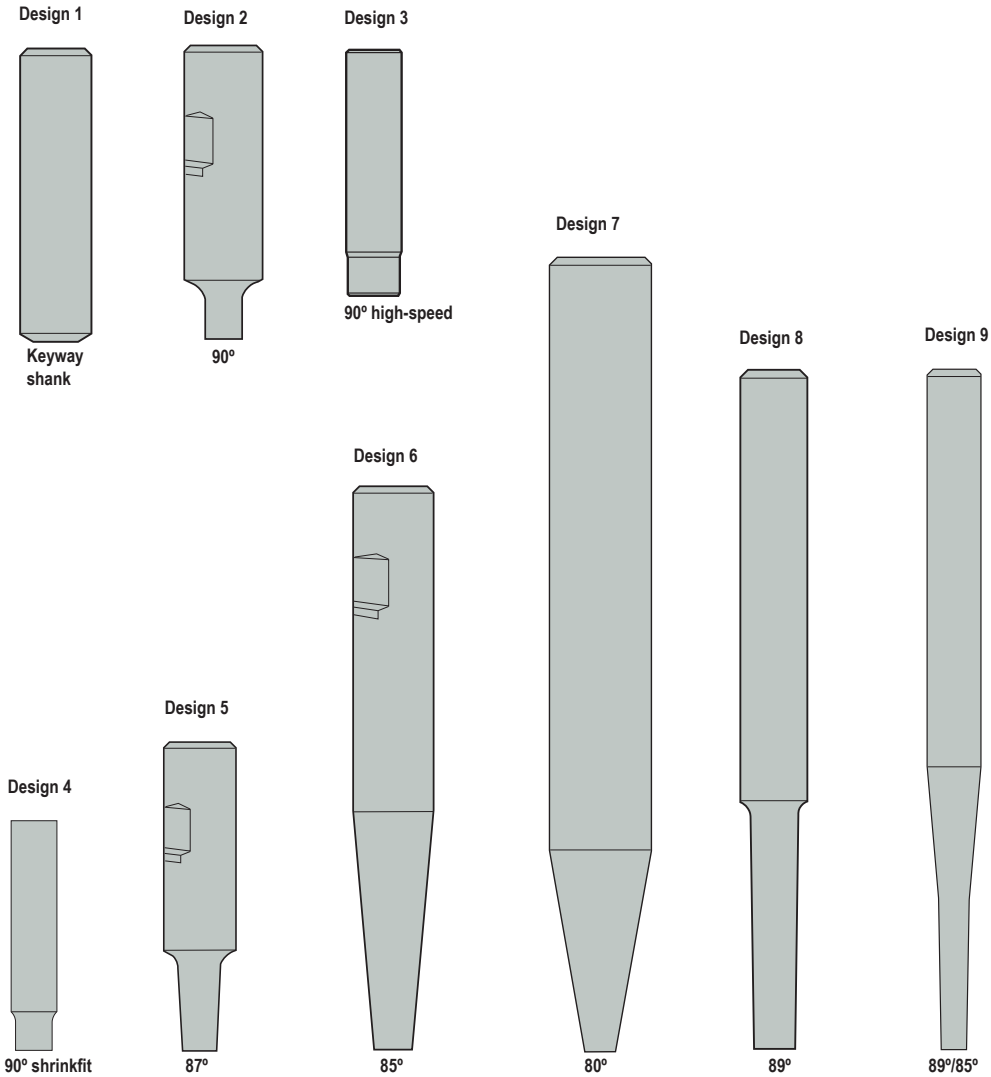
Design 1
Keyway shank
Design 2
90º
Design 3
90º high-speed
Design 7
80º
Design 8
89º
Design 9
89º/85º
Design 6
85º
Design 5
87º
Design 4
90º shrinkfit

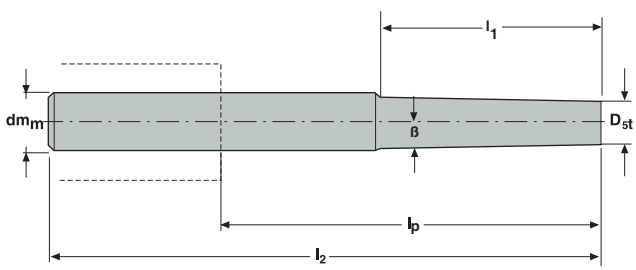
l1
dmm
ß
D5t
lp
l2

MM16

Design	Part No.	Connecting size	Dimensions in mm						KG	Spare part no.
			D_{5t}	dm_m	β°	l_1	l_2	l_p		
1	MM16- 20070.0-0000	MM16	15,2	20	60	0	70	20	0,2	1
3	MM16- 16070.0-0011M	MM16	15,2	16	0	11,3	70	22	0,1	1
4	MM16- 20080.0-0011DS	MM16	15,2	20	0	11,3	80	30	0,4	2
2	MM16- 25100.3-0019	MM16	15,2	25	0	19	100	94	0,3	3
2	20150.0-0038DS	MM16	15,2	20	0	38	150	100	0,6	2
2	20160.0-0076DS	MM16	15,2	20	0	76	160	110	0,6	2
2	16150.0-0080DS	MM16	15,2	16	0	80	150	102	0,4	2
5	MM16- 20115.3-3045	MM16	15,2	20	3	45,8	115	65	0,2	3
5	25115.3-3035	MM16	15,2	25	3	35	115	59	0,3	3
6	MM16- 25170.3-5056	MM16	15,2	25	5	56	170	114	0,6	4
7	MM16- 32250.0-10047	MM16	15,2	32	10	47,6	250	190	1,3	4
8	MM16- 20130.0-1045DS	MM16	15,2	20	1	45	130	80	0,5	2
8	20190.0-1055M	MM16	15,2	20	1	55	190	140	0,4	5
8	25170.0-1060	MM16	19	25	1	60	170	114	0,5	5
8	20190.0-1075M	MM16	15,2	20	1	75	190	140	0,4	5
8	20190.0-1075DS	MM16	15,2	20	1	75	190	140	0,8	2
8	20190.0-1095M	MM16	15,2	20	1	95	190	140	0,4	6
8	20190.0-1095DS	MM16	15,2	20	1	95	190	140	0,8	2
9*	MM16- 25250.0-1075DS	MM16	15,2	25	1	75	250	194	1,6	2

*For design 9, the l1 value is valid on the 89° tapered part

Spare Parts

Spare part no.	Tension screw	Sleeve
		–
1		–
2		–
3		–
4		–
5		–
6		–

Please check availability in current price and stock-list.
Allen key H05-4 for sleeve to be ordered separately.

For wrench types, see insert pages 428 - 431.

Slot milling/ square shoulder milling

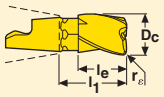

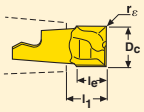

Insert type	Part No.	Dimensions in mm D_c	r_ε	l_e	l_1	Z_c*	Wrench	Coated Grades T60M	F15M	F30M	F40M	
3-flute	MM16 -16019-A30-E06	16	0	19,25	24,5	3	MM0416			■		
3-flute	-16019-R05A30-M06	16	0,5	19,25	24,5	3	MM0416				■	
3-flute	-16019-R10A30-E06	16	1,0	19,25	24,5	3	MM0416			■		
3-flute	-16019-R10A30-M06	16	1,0	19,25	24,5	3	MM0416				■	
3-flute	-16019-R20A30-D06	16	2,0	19,25	24,5	3	MM0416			■		
3-flute	-16019-R20A30-M06	16	2,0	19,25	24,5	3	MM0416				■	
3-flute	-16019-R30A30-E06	16	3,0	19,25	24,5	3	MM0416			■		
3-flute	-16019-R30A30-M06	16	3,0	19,25	24,5	3	MM0416				■	
3-flute	-16019-R40A30-M06	16	4,0	19,25	24,5	3	MM0416				■	
3-flute	-16019-R50A30-M06	16	5,0	19,25	24,5	3	MM0416				■	
3-flute	-16019-R60A30-M06	16	6,0	19,25	24,5	3	MM0416				■	
3-flute	MM16 -20015-A30-E06	20	0	15	20,15	3	MM0416			■		
3-flute	-20015-R05A30-M06	20	0,5	15	20,15	3	MM0416				■	
3-flute	-20015-R10A30-E06	20	1,0	15	20,15	3	MM0416			■		
3-flute	-20015-R10A30-M06	20	1,0	15	20,15	3	MM0416				■	
3-flute	-20015-R20A30-D06	20	2,0	15	20,15	3	MM0416			■		
3-flute	-20015-R30A30-E06	20	3,0	15	20,15	3	MM0416			■		
3-flute	-20015-R30A30-M06	20	3,0	15	20,15	3	MM0416				■	
3-flute	-20015-R50A30-M06	20	5,0	15	20,15	3	MM0416				■	
3-flute	MM16 -15919-A30-E06	15,875	0	19,25	24,5	3	MM0416			■		
3-flute	-15919-R08A30-M06	15,875	0,8	19,25	24,5	3	MM0416				■	
3-flute	-15919-R16A30-D06	15,875	1,6	19,25	24,5	3	MM0416			■		
3-flute	-15919-R32A30-M06	15,875	3,2	19,25	24,5	3	MM0416				■	
3-flute	-15919-R64A30-M06	15,875	6,4	19,25	24,5	3	MM0416				■	
3-flute	MM16 -19115-A30-E06	19,05	0	15	20,15	3	MM0416			■		
3-flute	-19115-R08A30-M06	19,05	0,8	15	20,15	3	MM0416				■	
3-flute	-19115-R19A30-D06	19,05	1,9	15	20,15	3	MM0416			■		
3-flute	-19115-R32A30-M06	19,05	3,2	15	20,15	3	MM0416				■	
3-flute	-19115-R64A30-M06	19,05	6,4	15	20,15	3	MM0416				■	
2-flute	MM16 -16011-M06	16	0	11	13,6	2	MM1420	■				
2-flute	-16011-R08-MD07	16	0,8	11	13,58	2	MM1420	■		■		
2-flute	-16011-R08P-M05	16	0,8	10,79	13,41	2	MM1420			■		
2-flute	-16011-R20-MD07	16	2,0	10,95	13,55	2	MM1420			■		
2-flute	-16011-R30-MD07	16	3,0	10,93	13,54	2	MM1420	■		■		
2-flute	-16011-R40-MD07	16	4,0	10,91	13,52	2	MM1420	■				
2-flute	-16011-R50-MD07	16	5,0	10,89	13,50	2	MM1420	■				
2-flute	MM16 -15911-M06	15,875	0	11	13,6	2	MM1420	■				
2-flute	-15911-R08-MD07	15,875	0,8	10,98	13,58	2	MM1420	■				
2-flute	MM16 -16011-R08A8-E06	16	0,8	10,5	13,62	2	MM1420	■		■		
2-flute	MM16 -20013-R08A8-E06	20	0,8	12,7	15,42	2	MM1420	■		■		
2-flute	MM16 -19013-R08A8-E06	19,05	0,8	12,7	15,39	2	MM1420			■		

*Effective number of flutes

For Torque keys and torque values, see page

Slot milling

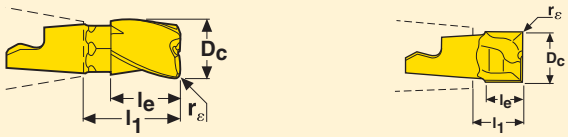

Insert type	Part No.	Dimensions in mm D_c	r_ε	l_e	l_1	Z_c*	Wrench	Coated Grades T60M	F15M	F30M	F40M	
3-flute	MM16 -15719-R03A30-M06	15,7	0,3	19,25	24,5	3	MM0416				■	
2-flute	-15711T-R03-D07	15,7	0,3	11	13,6	2	MM1420	■				
3-flute	MM16 -19715-R05A30-M06	19,7	0,5	15	20,15	3	MM0416				■	

Centre drilling

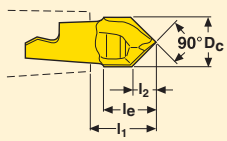

Insert type	Part No.	Dimensions in mm D_c	l_e	l_1	l_2	Z_c*	Wrench	Coated Grades T60M	F15M	F30M	F40M	
90°	MM16 -16008-C90-M06	16	16,7	19,2	7,53	2	MM1420	■				
120°	MM16 -16011-C120-M06	16	16,64	18,9	4,30	2	MM1420	■				

*Effective number of flutes
For Torque keys and torque values, see page

Chamfering

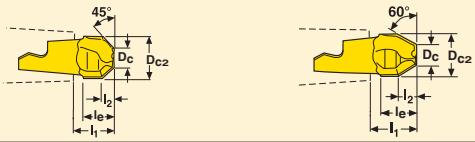

Insert type	Part No.	Dimensions in mm					Z_c*	Wrench	Coated				
									Grades				
		D_{c2}	D_c	l_e	l_1	l_2			T60M	F15M	F30M	F40M	
45°	**MM16 -16011-4540-E06**	16,0	7,69	10,9	13,25	4,10	2	MM1420	■				
60°	**MM16 -16012-6060-E06**	16,0	8,38	12,9	15,3	6,70	2	MM1420	■				

Plunge milling

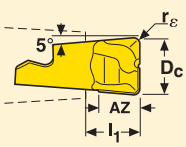

Insert type	Part No.	Dimensions in mm				Z_c*	Wrench	Coated				
								Grades				
		D_c	r_ε	AZ	l_1			T60M	F15M	F30M	F40M	
2-flute	**MM16 -16011-R10-PL-MD07**	16	1,0	11,3	11,3	2	MM1420			■		
2-flute	**MM16 -16011-R20-PL-MD07**	16	2,0	11,3	11,3	2	MM1420			■		

*Effective number of flutes
For Torque keys and torque values, see page

Precision inserts for semi-finishing in all materials

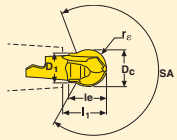

Insert type	Part No.	Dimensions in mm						Z_c*	Wrench	Coated Grades				
		D_c	r_ε	l_e	l_1	D_1	SA°			T60M	F15M	F30M	F40M	
2-flute	MM16 -20020-B120PF-M04	20	10,0	20	21,94	15,9	254,0	2	MM1420		■			
2-flute	-20020-B120P-M07	20	10,0	20	21,94	15,9	254,0	2	MM1420			■		

*Effective number of flutes
For Torque keys and torque values, see page

Copy milling

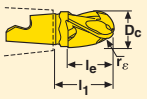

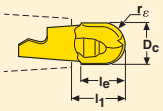

Insert type	Part No.	Dimensions in mm D_c	r_ε	l_e	l_1	Z_c*	Wrench	Coated Grades T60M	F15M	F30M	F40M	
3-flute	MM16 -16019-B90A30-E06	16	8,0	19,25	24,5	3	MM0416			■		
3-flute	-20015-B90A30-E06	20	10,0	15	20,15	3	MM0416			■		
3-flute	-16019-B90A30-M06	16	8,0	19,25	24,5	3	MM0416				■	
3-flute	-20015-B90A30-M06	20	10,0	15	20,15	3	MM0416				■	
3-flute	-16019-B90A30-D06	16	8,0	19,25	24,5	3	MM0416			■		
3-flute	-20015-B90A30-D06	20	10,0	15	20,15	3	MM0416			■		
3-flute	-15919-B90A30-E06	15,875	7,938	19,05	24,3	3	MM0416			■		
3-flute	-15919-B90A30-M06	15,875	7,938	19,05	24,3	3	MM0416				■	
3-flute	-19115-B90A30-E06	19,05	9,525	15	20,1	3	MM0416			■		
3-flute	-19115-B90A30-M06	19,05	9,525	15	20,1	3	MM0416				■	
2-flute	MM16 -16016-B90-MD07	16	8,0	16,20	18,4	2	MM1420	■		■		
2-flute	-20020-B90-MD07	20	10,0	20,3	22,15	2	MM1420	■		■		
2-flute	-19020-B90-MD07	19,05	9,525	20,30	22,15	2	MM1420	■				
2-flute	-16016-B90S-E07	16	8,0	16,38	18,83	2	MM1420			■		
2-flute	-20020-B90S-E07	20	10,0	20,3	22,15	2	MM1420			■		
2-flute	-19020-B90S-E07	19,05	9,525	20,3	22,15	2	MM1420			■		
2-flute	-16016-B90P-M07	16	8,0	13,8	18,4	2	MM1420			■		
2-flute	-20020-B90P-M07	20	10,0	17,43	22,12	2	MM1420			■		
2-flute	-15916-B90P-M07	15,875	7,938	13,8	18,40	2	MM1420	■		■		
2-flute	-19020-B90P-M07	19,05	9,525	17,43	22,12	2	MM1420	■				
2-flute	-16016-B90PF-M03	16	8,0	13,8	18,4	2	MM1420		■			

*Effective number of flutes

For Torque keys and torque values, see page

High feed

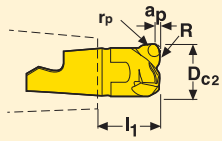

Insert type	Part No.	Dimensions in mm					Z_c*	Wrench	Coated				
									Grades				
		a_p	D_{c2}	r_p	R	l_1			T60M	F15M	F30M	F40M	
3-flute	**MM16 -16.60-HF-MD12**	0,6	16	1,2	10	17,24	3	MM0416			■		

*Effective number of flutes
For Torque keys and torque values, see page

MM16 – General Insert selection

SMG		a_p	f_z			
			100%	40%	20%	10%
P1	MM16-16019-R05A30-M06 F40M	3,5	0,085	0,085	0,11	0,14
P2	MM16-16019-R05A30-M06 F40M	3,5	0,085	0,090	0,11	0,15
P3	MM16-16019-R05A30-M06 F40M	3,5	0,080	0,085	0,10	0,14
P4	MM16-16019-R05A30-M06 F40M	3,5	0,080	0,080	0,10	0,14
P5	MM16-16019-R05A30-M06 F40M	3,5	0,080	0,080	0,10	0,13
P6	MM16-16019-R05A30-M06 F40M	3,5	0,080	0,080	0,10	0,13
P7	MM16-16019-R05A30-M06 F40M	3,5	0,080	0,080	0,10	0,13
P8	MM16-16019-R05A30-M06 F40M	3,5	0,080	0,085	0,10	0,14
P11	MM16-16019-R05A30-M06 F40M	3,5	0,080	0,080	0,10	0,13
M1	MM16-16019-R05A30-M06 F40M	3,5	0,085	0,090	0,11	0,15
M2	MM16-16019-R05A30-M06 F40M	3,5	0,080	0,080	0,10	0,13
M3	MM16-16019-R05A30-M06 F40M	2,5	0,065	0,065	0,080	0,11
M4	MM16-16019-R05A30-M06 F40M	2,0	0,055	0,055	0,070	0,095
M5	MM16-16019-R05A30-M06 F40M	2,0	0,055	0,055	0,070	0,095
K1	MM16-16019-R10A30-E06 F30M	3,5	0,090	0,090	0,11	0,15
K2	MM16-16019-R10A30-E06 F30M	3,5	0,080	0,085	0,10	0,14
K3	MM16-16019-R10A30-E06 F30M	3,5	0,080	0,085	0,10	0,14
K4	MM16-16019-R10A30-E06 F30M	3,5	0,080	0,085	0,10	0,14
K5	MM16-16019-R20A30-D06 F30M	3,5	0,080	0,085	0,10	0,14
K6	MM16-16019-R20A30-D06 F30M	3,5	0,090	0,090	0,11	0,15
K7	MM16-16019-R20A30-D06 F30M	3,5	0,080	0,085	0,10	0,14
N1	MM16-16019-R10A30-E06 F30M	3,5	0,11	0,12	0,14	0,19
N2	MM16-16019-R10A30-E06 F30M	3,5	0,11	0,12	0,14	0,19
N3	MM16-16019-R10A30-E06 F30M	3,5	0,11	0,12	0,14	0,19
N11	MM16-16019-R10A30-E06 F30M	3,5	0,11	0,12	0,14	0,19
S1	MM16-16019-R20A30-D06 F30M	2,0	0,075	0,080	0,095	0,13
S2	MM16-16019-R20A30-D06 F30M	2,0	0,075	0,080	0,095	0,13
S3	MM16-16019-R20A30-D06 F30M	2,0	0,070	0,075	0,090	0,12
S11	MM16-16019-R05A30-M06 F40M	2,5	0,065	0,065	0,080	0,11
S12	MM16-16019-R05A30-M06 F40M	2,5	0,065	0,065	0,080	0,11
S13	MM16-16019-R05A30-M06 F40M	2,0	0,055	0,055	0,070	0,095
H5	MM16-16019-R20A30-D06 F30M	2,5	0,070	0,070	0,085	0,11
H8	MM16-16019-R20A30-D06 F30M	2,5	0,050	0,055	0,065	0,085
H11	MM16-16019-R20A30-D06 F30M	2,5	0,070	0,070	0,085	0,11
H12	MM16-16019-R20A30-D06 F30M	2,5	0,070	0,070	0,085	0,11
H21	MM16-16019-R20A30-D06 F30M	2,5	0,050	0,055	0,065	0,085

SMG = Seco material group
f_z = mm/tooth
v_c= m/min
a_e/D_c = %
All cutting data are start values

MM16 – General Cutting data

	F30M				F40M				T60M			
SMG	100%	40%	20%	10%	100%	40%	20%	10%	100%	40%	20%	10%
P1	230	290	325	360	215	275	305	340	175	210	240	270
P2	225	285	315	350	210	265	295	330	170	205	235	260
P3	195	250	280	300	185	230	260	285	150	175	205	225
P4	175	220	245	270	160	205	230	255	135	155	180	200
P5	165	210	235	260	155	195	220	240	130	150	175	195
P6	190	235	265	290	175	220	250	270	145	170	195	215
P7	180	225	250	275	165	210	235	255	135	160	185	205
P8	165	210	235	255	155	195	220	240	130	145	175	190
P11	175	215	245	265	160	200	225	250	130	155	180	200
M1	180	230	255	285	170	210	240	265	140	165	190	210
M2	150	190	210	235	140	175	195	220	115	135	155	175
M3	120	155	170	185	115	140	160	175	95	105	125	140
M4	95	115	130	145	85	110	120	135	70	80	90	110
M5	80	100	110	120	70	90	100	110	60	65	75	90
K1	180	225	250	280	165	210	235	260	135	160	185	205
K2	160	200	220	245	145	185	205	230	120	145	165	185
K3	135	170	190	210	125	160	175	195	105	120	140	155
K4	125	160	180	200	120	150	165	185	100	115	135	150
K5	80	100	110	120	75	90	100	115	60	70	80	90
K6	110	145	160	175	105	130	145	165	85	100	115	130
K7	100	125	140	155	95	120	130	145	75	90	105	115
N1	660	830	930	1025	620	780	870	970	500	580	690	760
N2	530	670	750	840	500	630	700	780	405	470	560	610
N3	355	445	500	560	330	425	470	520	270	315	370	410
N11	405	510	570	640	380	485	540	600	310	360	425	465
S1	43	55	60	65	41	50	55	65	34	36	43	50
S2	35	44	49	55	33	42	46	50	27	29	34	41
S3	31	39	43	47	29	36	40	44	24	26	30	36
S11	60	75	85	95	55	70	80	90	47	50	60	70
S12	35	44	49	55	33	41	46	50	27	30	35	41
S13	28	35	39	43	26	33	37	41	22	23	28	32
H5	36	46	50	55	34	43	48	50	—	—	—	—
H8	39	48	55	60	36	45	50	55	—	—	—	—
H11	46	60	65	70	43	55	60	65	—	—	—	—
H12	75	95	105	115	70	90	100	110	—	—	—	—
H21	39	48	55	60	36	45	50	55	—	—	—	—

MM16 Z3 – Copy Insert selection – Roughing

SMG		a_p	f_z			
			100%	40%	20%	10%
P1	MM16-16019-B90A30-M06 F40M	3,5	0,12	0,12	0,15	0,20
P2	MM16-16019-B90A30-M06 F40M	3,5	0,12	0,12	0,15	0,20
P3	MM16-16019-B90A30-M06 F40M	3,5	0,11	0,12	0,14	0,19
P4	MM16-16019-B90A30-M06 F40M	3,5	0,11	0,11	0,14	0,19
P5	MM16-16019-B90A30-M06 F40M	3,5	0,11	0,11	0,14	0,19
P6	MM16-16019-B90A30-M06 F40M	3,5	0,11	0,11	0,14	0,18
P7	MM16-16019-B90A30-M06 F40M	3,5	0,11	0,11	0,14	0,18
P8	MM16-16019-B90A30-M06 F40M	3,5	0,11	0,12	0,14	0,19
P11	MM16-16019-B90A30-M06 F40M	3,5	0,11	0,11	0,14	0,18
M1	MM16-16019-B90A30-M06 F40M	3,5	0,12	0,12	0,15	0,20
M2	MM16-16019-B90A30-M06 F40M	3,5	0,11	0,11	0,14	0,19
M3	MM16-16019-B90A30-M06 F40M	2,5	0,090	0,090	0,11	0,15
M4	MM16-16019-B90A30-M06 F40M	2,0	0,075	0,080	0,095	0,13
M5	MM16-16019-B90A30-M06 F40M	2,0	0,075	0,080	0,095	0,13
K1	MM16-16019-B90A30-E06 F30M	3,5	0,12	0,12	0,15	0,20
K2	MM16-16019-B90A30-E06 F30M	3,5	0,11	0,11	0,14	0,19
K3	MM16-16019-B90A30-E06 F30M	3,5	0,11	0,11	0,14	0,19
K4	MM16-16019-B90A30-E06 F30M	3,5	0,11	0,11	0,14	0,19
K5	MM16-16019-B90A30-D06 F30M	3,5	0,10	0,10	0,12	0,17
K6	MM16-16019-B90A30-D06 F30M	3,5	0,11	0,11	0,14	0,19
K7	MM16-16019-B90A30-D06 F30M	3,5	0,10	0,10	0,12	0,17
N1	MM16-16019-B90A30-E06 F30M	3,5	0,15	0,16	0,19	0,26
N2	MM16-16019-B90A30-E06 F30M	3,5	0,15	0,16	0,19	0,26
N3	MM16-16019-B90A30-E06 F30M	3,5	0,15	0,16	0,19	0,26
N11	MM16-16019-B90A30-E06 F30M	3,5	0,15	0,16	0,19	0,26
S1	MM16-16019-B90A30-D06 F30M	2,0	0,075	0,080	0,095	0,13
S2	MM16-16019-B90A30-D06 F30M	2,0	0,075	0,080	0,095	0,13
S3	MM16-16019-B90A30-D06 F30M	2,0	0,070	0,075	0,090	0,12
S11	MM16-16019-B90A30-M06 F40M	2,5	0,090	0,090	0,11	0,15
S12	MM16-16019-B90A30-M06 F40M	2,5	0,090	0,090	0,11	0,15
S13	MM16-16019-B90A30-M06 F40M	2,0	0,075	0,080	0,095	0,13
H5	MM16-16019-B90A30-D06 F30M	2,5	0,075	0,075	0,095	0,13
H8	MM16-16019-B90A30-D06 F30M	2,5	0,055	0,060	0,070	0,095
H11	MM16-16019-B90A30-D06 F30M	2,5	0,075	0,075	0,095	0,13
H12	MM16-16019-B90A30-D06 F30M	2,5	0,075	0,075	0,095	0,13
H21	MM16-16019-B90A30-D06 F30M	2,5	0,055	0,060	0,070	0,095

SMG = Seco material group
f_z = mm/tooth
v_c= m/min
a_e/D_c = %
All cutting data are start values

MM16 Z3 – Copy Insert selection – Semi finishing

SMG		a_p	f_z			
			15%	10%	5%	2%
P1	MM16-16019-B90A30-E06 F30M	3,5	0,17	0,20	0,28	0,48
P2	MM16-16019-B90A30-E06 F30M	3,5	0,17	0,20	0,28	0,48
P3	MM16-16019-B90A30-E06 F30M	3,5	0,16	0,19	0,28	0,46
P4	MM16-16019-B90A30-E06 F30M	3,5	0,16	0,19	0,26	0,44
P5	MM16-16019-B90A30-E06 F30M	3,5	0,16	0,19	0,26	0,44
P6	MM16-16019-B90A30-E06 F30M	3,5	0,15	0,18	0,26	0,42
P7	MM16-16019-B90A30-E06 F30M	3,5	0,15	0,18	0,26	0,42
P8	MM16-16019-B90A30-E06 F30M	3,5	0,16	0,19	0,28	0,46
P11	MM16-16019-B90A30-E06 F30M	3,5	0,15	0,18	0,26	0,42
M1	MM16-16019-B90A30-E06 F30M	3,5	0,17	0,20	0,28	0,48
M2	MM16-16019-B90A30-E06 F30M	3,5	0,16	0,19	0,26	0,44
M3	MM16-16019-B90A30-E06 F30M	2,5	0,12	0,15	0,20	0,34
M4	MM16-16019-B90A30-E06 F30M	2,0	0,11	0,13	0,18	0,30
M5	MM16-16019-B90A30-E06 F30M	2,0	0,11	0,13	0,18	0,30
K1	MM16-16019-B90A30-E06 F30M	3,5	0,17	0,20	0,28	0,48
K2	MM16-16019-B90A30-E06 F30M	3,5	0,16	0,19	0,26	0,44
K3	MM16-16019-B90A30-E06 F30M	3,5	0,16	0,19	0,26	0,44
K4	MM16-16019-B90A30-E06 F30M	3,5	0,16	0,19	0,26	0,44
K5	MM16-16019-B90A30-E06 F30M	3,5	0,14	0,17	0,24	0,38
K6	MM16-16019-B90A30-E06 F30M	3,5	0,16	0,19	0,26	0,44
K7	MM16-16019-B90A30-E06 F30M	3,5	0,14	0,17	0,24	0,38
N1	MM16-16019-B90A30-E06 F30M	3,5	0,22	0,26	0,38	0,65
N2	MM16-16019-B90A30-E06 F30M	3,5	0,22	0,26	0,38	0,65
N3	MM16-16019-B90A30-E06 F30M	3,5	0,22	0,26	0,38	0,65
N11	MM16-16019-B90A30-E06 F30M	3,5	0,22	0,26	0,38	0,65
S1	MM16-16019-B90A30-E06 F30M	2,0	0,11	0,13	0,18	0,30
S2	MM16-16019-B90A30-E06 F30M	2,0	0,11	0,13	0,18	0,30
S3	MM16-16019-B90A30-D06 F30M	2,0	0,10	0,12	0,17	0,28
S11	MM16-16019-B90A30-E06 F30M	2,5	0,12	0,15	0,20	0,34
S12	MM16-16019-B90A30-E06 F30M	2,5	0,12	0,15	0,20	0,34
S13	MM16-16019-B90A30-E06 F30M	2,0	0,11	0,13	0,18	0,30
H5	MM16-16019-B90A30-E06 F30M	2,5	0,11	0,13	0,18	0,28
H8	MM16-16019-B90A30-E06 F30M	2,5	0,080	0,095	0,13	0,22
H11	MM16-16019-B90A30-E06 F30M	2,5	0,11	0,13	0,18	0,28
H12	MM16-16019-B90A30-E06 F30M	2,5	0,11	0,13	0,18	0,28
H21	MM16-16019-B90A30-E06 F30M	2,5	0,080	0,095	0,13	0,22

SMG = Seco material group
f_z = mm/tooth
v_c= m/min
a_e/D_c = %
All cutting data are start values

MM16 Z3 – Copy Insert selection – Finishing

SMG		a_p	f_z			
			15%	10%	5%	2%
P1	MM16-16019-B90A30-E06 F30M	3,5	0,17	0,20	0,28	0,48
P2	MM16-16019-B90A30-E06 F30M	3,5	0,17	0,20	0,28	0,48
P3	MM16-16019-B90A30-E06 F30M	3,5	0,16	0,19	0,28	0,46
P4	MM16-16019-B90A30-E06 F30M	3,5	0,16	0,19	0,26	0,44
P5	MM16-16019-B90A30-E06 F30M	3,5	0,16	0,19	0,26	0,44
P6	MM16-16019-B90A30-E06 F30M	3,5	0,15	0,18	0,26	0,42
P7	MM16-16019-B90A30-E06 F30M	3,5	0,15	0,18	0,26	0,42
P8	MM16-16019-B90A30-E06 F30M	3,5	0,16	0,19	0,28	0,46
P11	MM16-16019-B90A30-E06 F30M	3,5	0,15	0,18	0,26	0,42
M1	MM16-16019-B90A30-E06 F30M	3,5	0,17	0,20	0,28	0,48
M2	MM16-16019-B90A30-E06 F30M	3,5	0,16	0,19	0,26	0,44
M3	MM16-16019-B90A30-E06 F30M	2,5	0,12	0,15	0,20	0,34
M4	MM16-16019-B90A30-E06 F30M	2,0	0,11	0,13	0,18	0,30
M5	MM16-16019-B90A30-E06 F30M	2,0	0,11	0,13	0,18	0,30
K1	MM16-16019-B90A30-E06 F30M	3,5	0,17	0,20	0,28	0,48
K2	MM16-16019-B90A30-E06 F30M	3,5	0,16	0,19	0,26	0,44
K3	MM16-16019-B90A30-E06 F30M	3,5	0,16	0,19	0,26	0,44
K4	MM16-16019-B90A30-E06 F30M	3,5	0,16	0,19	0,26	0,44
K5	MM16-16019-B90A30-E06 F30M	3,5	0,14	0,17	0,24	0,38
K6	MM16-16019-B90A30-E06 F30M	3,5	0,16	0,19	0,26	0,44
K7	MM16-16019-B90A30-E06 F30M	3,5	0,14	0,17	0,24	0,38
N1	MM16-16019-B90A30-E06 F30M	3,5	0,22	0,26	0,38	0,65
N2	MM16-16019-B90A30-E06 F30M	3,5	0,22	0,26	0,38	0,65
N3	MM16-16019-B90A30-E06 F30M	3,5	0,22	0,26	0,38	0,65
N11	MM16-16019-B90A30-E06 F30M	3,5	0,22	0,26	0,38	0,65
S1	MM16-16019-B90A30-E06 F30M	2,0	0,11	0,13	0,18	0,30
S2	MM16-16019-B90A30-E06 F30M	2,0	0,11	0,13	0,18	0,30
S3	MM16-16019-B90A30-E06 F30M	2,0	0,10	0,12	0,17	0,28
S11	MM16-16019-B90A30-E06 F30M	2,5	0,12	0,15	0,20	0,34
S12	MM16-16019-B90A30-E06 F30M	2,5	0,12	0,15	0,20	0,34
S13	MM16-16019-B90A30-E06 F30M	2,0	0,11	0,13	0,18	0,30
H5	MM16-16019-B90A30-E06 F30M	2,5	0,11	0,13	0,18	0,28
H8	MM16-16019-B90A30-E06 F30M	2,5	0,080	0,095	0,13	0,22
H11	MM16-16019-B90A30-E06 F30M	2,5	0,11	0,13	0,18	0,28
H12	MM16-16019-B90A30-E06 F30M	2,5	0,11	0,13	0,18	0,28
H21	MM16-16019-B90A30-E06 F30M	2,5	0,080	0,095	0,13	0,22

SMG = Seco material group
f_z = mm/tooth
v_c= m/min
a_e/D_c = %
All cutting data are start values

MM16 Z3 – Copy Cutting data

	F30M					F40M				
SMG	100%	20%	10%	5%	2%	100%	20%	10%	5%	2%
P1	285	375	410	450	500	270	355	400	430	480
P2	275	365	400	440	490	265	350	380	415	470
P3	240	315	350	385	430	230	300	335	365	405
P4	215	280	310	340	375	205	270	295	325	360
P5	205	270	300	325	360	195	255	285	310	345
P6	230	300	335	365	410	220	285	320	345	390
P7	220	285	315	345	385	205	270	300	325	370
P8	205	265	295	325	360	195	250	280	310	345
P11	210	275	310	335	375	200	265	295	315	355
M1	225	295	325	355	395	215	280	310	335	375
M2	185	240	270	290	325	175	230	255	275	310
M3	145	200	215	235	260	140	190	205	225	250
M4	115	160	165	180	200	110	150	155	170	195
M5	95	130	135	150	170	90	125	130	145	160
K1	220	290	320	345	390	210	275	305	330	370
K2	195	255	285	305	340	185	245	270	290	330
K3	165	215	240	260	290	155	205	230	245	280
K4	160	205	230	250	275	150	195	220	235	265
K5	95	125	140	155	170	90	120	130	145	160
K6	140	180	200	220	245	130	175	190	210	235
K7	125	160	180	195	215	115	150	170	185	205
N1	810	1075	1175	1300	1425	770	1025	1125	1225	1375
N2	660	870	950	1050	1150	620	830	910	1000	1100
N3	440	580	640	700	770	415	550	600	670	740
N11	500	660	730	800	880	475	630	690	760	840
S1	55	75	75	85	95	50	70	75	80	90
S2	43	60	60	70	75	41	55	60	65	70
S3	37	50	55	60	65	36	49	50	55	65
S11	75	100	110	120	130	70	95	105	115	125
S12	43	60	65	70	75	41	55	60	65	75
S13	34	48	50	55	60	33	45	47	50	60
H5	45	60	65	70	80	43	55	60	70	75
H8	47	65	70	75	85	45	60	65	70	80
H11	60	75	85	90	100	55	70	80	85	95
H12	95	125	135	150	165	90	115	130	140	155
H21	47	65	70	75	85	45	60	65	70	80

MM16 Z2 – Copy Insert selection – Roughing

SMG		a_p	f_z			
			100%	40%	20%	10%
P1	MM16-16016-B90S-E07 F30M	7,0	0,14	0,14	0,17	0,24
P2	MM16-16016-B90S-E07 F30M	7,0	0,14	0,14	0,18	0,24
P3	MM16-16016-B90S-E07 F30M	7,0	0,13	0,14	0,17	0,22
P4	MM16-16016-B90-MD07 F30M	7,0	0,13	0,13	0,16	0,22
P5	MM16-16016-B90-MD07 F30M	7,0	0,13	0,13	0,16	0,22
P6	MM16-16016-B90-MD07 F30M	7,0	0,13	0,13	0,16	0,22
P7	MM16-16016-B90-MD07 F30M	7,0	0,13	0,13	0,16	0,22
P8	MM16-16016-B90-MD07 F30M	7,0	0,13	0,14	0,17	0,22
P11	MM16-16016-B90-MD07 F30M	7,0	0,13	0,13	0,16	0,22
M1	MM16-16016-B90S-E07 F30M	7,0	0,14	0,14	0,18	0,24
M2	MM16-16016-B90S-E07 F30M	7,0	0,13	0,13	0,16	0,22
M3	MM16-16016-B90S-E07 F30M	5,0	0,10	0,11	0,13	0,17
M4	MM16-16016-B90-MD07 F30M	4,0	0,090	0,090	0,11	0,15
M5	MM16-16016-B90-MD07 F30M	4,0	0,090	0,090	0,11	0,15
K1	MM16-16016-B90S-E07 F30M	7,0	0,14	0,14	0,18	0,24
K2	MM16-16016-B90S-E07 F30M	7,0	0,13	0,13	0,16	0,22
K3	MM16-16016-B90S-E07 F30M	7,0	0,13	0,13	0,16	0,22
K4	MM16-16016-B90S-E07 F30M	7,0	0,13	0,13	0,16	0,22
K5	MM16-16016-B90-MD07 F30M	7,0	0,12	0,12	0,15	0,20
K6	MM16-16016-B90-MD07 F30M	7,0	0,13	0,13	0,16	0,22
K7	MM16-16016-B90-MD07 F30M	7,0	0,12	0,12	0,15	0,20
N1	MM16-16016-B90S-E07 F30M	7,0	0,18	0,18	0,22	0,30
N2	MM16-16016-B90S-E07 F30M	7,0	0,18	0,18	0,22	0,30
N3	MM16-16016-B90S-E07 F30M	7,0	0,18	0,18	0,22	0,30
N11	MM16-16016-B90S-E07 F30M	7,0	0,18	0,18	0,22	0,30
S1	MM16-16016-B90-MD07 F30M	4,0	0,090	0,090	0,11	0,15
S2	MM16-16016-B90-MD07 F30M	4,0	0,090	0,090	0,11	0,15
S3	MM16-16016-B90-MD07 F30M	4,0	0,085	0,085	0,10	0,14
S11	MM16-16016-B90-MD07 F30M	4,5	0,10	0,11	0,13	0,17
S12	MM16-16016-B90-MD07 F30M	4,5	0,10	0,11	0,13	0,17
S13	MM16-16016-B90-MD07 F30M	4,0	0,090	0,090	0,11	0,15
H5	MM16-16016-B90-MD07 F30M	5,0	0,090	0,090	0,11	0,15
H8	MM16-16016-B90-MD07 F30M	4,5	0,065	0,070	0,085	0,11
H11	MM16-16016-B90-MD07 F30M	5,0	0,090	0,090	0,11	0,15
H12	MM16-16016-B90-MD07 F30M	5,0	0,090	0,090	0,11	0,15
H21	MM16-16016-B90-MD07 F30M	4,5	0,065	0,070	0,085	0,11

SMG = Seco material group
f_z = mm/tooth
v_c= m/min
a_e/D_c = %
All cutting data are start values

MM16 Z2 – Copy Insert selection – Semi finishing

SMG		a_p	f_z			
			15%	10%	5%	2%
P1	MM16-16016-B90P-M07 F30M	7,0	0,20	0,24	0,34	0,55
P2	MM16-16016-B90P-M07 F30M	7,0	0,20	0,24	0,34	0,55
P3	MM16-16016-B90P-M07 F30M	7,0	0,19	0,22	0,32	0,55
P4	MM16-16016-B90P-M07 F30M	7,0	0,19	0,22	0,32	0,55
P5	MM16-16016-B90P-M07 F30M	7,0	0,18	0,22	0,30	0,50
P6	MM16-16016-B90P-M07 F30M	7,0	0,18	0,22	0,30	0,50
P7	MM16-16016-B90P-M07 F30M	7,0	0,18	0,22	0,30	0,50
P8	MM16-16016-B90P-M07 F30M	7,0	0,19	0,22	0,32	0,55
P11	MM16-16016-B90P-M07 F30M	7,0	0,18	0,22	0,30	0,50
M1	MM16-16016-B90P-M07 F30M	7,0	0,20	0,24	0,34	0,55
M2	MM16-16016-B90P-M07 F30M	7,0	0,18	0,22	0,30	0,50
M3	MM16-16016-B90P-M07 F30M	5,0	0,15	0,17	0,24	0,40
M4	MM16-16016-B90P-M07 F30M	4,0	0,13	0,15	0,22	0,34
M5	MM16-16016-B90P-M07 F30M	4,0	0,13	0,15	0,22	0,34
K1	MM16-16016-B90P-M07 F30M	7,0	0,20	0,24	0,34	0,55
K2	MM16-16016-B90P-M07 F30M	7,0	0,18	0,22	0,30	0,50
K3	MM16-16016-B90P-M07 F30M	7,0	0,18	0,22	0,30	0,50
K4	MM16-16016-B90P-M07 F30M	7,0	0,18	0,22	0,30	0,50
K5	MM16-16016-B90P-M07 F30M	7,0	0,16	0,20	0,28	0,46
K6	MM16-16016-B90P-M07 F30M	7,0	0,18	0,22	0,30	0,50
K7	MM16-16016-B90P-M07 F30M	7,0	0,16	0,20	0,28	0,46
N1	MM16-16016-B90P-M07 F30M	7,0	0,26	0,30	0,44	0,75
N2	MM16-16016-B90P-M07 F30M	7,0	0,26	0,30	0,44	0,75
N3	MM16-16016-B90P-M07 F30M	7,0	0,26	0,30	0,44	0,75
N11	MM16-16016-B90P-M07 F30M	7,0	0,26	0,30	0,44	0,75
S1	MM16-16016-B90P-M07 F30M	4,0	0,13	0,15	0,22	0,34
S2	MM16-16016-B90P-M07 F30M	4,0	0,13	0,15	0,22	0,34
S3	MM16-16016-B90P-M07 F30M	4,0	0,12	0,14	0,20	0,32
S11	MM16-16016-B90P-M07 F30M	4,5	0,15	0,17	0,24	0,40
S12	MM16-16016-B90P-M07 F30M	4,5	0,15	0,17	0,24	0,40
S13	MM16-16016-B90P-M07 F30M	4,0	0,13	0,15	0,22	0,34
H5	MM16-16016-B90P-M07 F30M	5,0	0,12	0,15	0,20	0,34
H8	MM16-16016-B90P-M07 F30M	4,5	0,095	0,11	0,16	0,26
H11	MM16-16016-B90P-M07 F30M	5,0	0,12	0,15	0,20	0,34
H12	MM16-16016-B90P-M07 F30M	5,0	0,12	0,15	0,20	0,34
H21	MM16-16016-B90P-M07 F30M	4,5	0,095	0,11	0,16	0,26

SMG = Seco material group
f_z = mm/tooth
v_c= m/min
a_e/D_c = %
All cutting data are start values

MM16 Z2 – Copy Insert selection – Finishing

SMG		a_p	f_z			
			15%	10%	5%	2%
P1	MM16-16016-B90PF-M03 F15M	7,0	0,085	0,10	0,14	0,22
P2	MM16-16016-B90PF-M03 F15M	7,0	0,085	0,10	0,14	0,22
P3	MM16-16016-B90PF-M03 F15M	7,0	0,080	0,095	0,13	0,22
P4	MM16-16016-B90PF-M03 F15M	7,0	0,080	0,095	0,13	0,22
P5	MM16-16016-B90PF-M03 F15M	7,0	0,075	0,090	0,13	0,20
P6	MM16-16016-B90PF-M03 F15M	7,0	0,075	0,090	0,13	0,20
P7	MM16-16016-B90PF-M03 F15M	7,0	0,075	0,090	0,13	0,20
P8	MM16-16016-B90PF-M03 F15M	7,0	0,080	0,095	0,13	0,22
P11	MM16-16016-B90PF-M03 F15M	7,0	0,075	0,090	0,13	0,20
M1	MM16-16016-B90PF-M03 F15M	7,0	0,085	0,10	0,14	0,22
M2	MM16-16016-B90PF-M03 F15M	7,0	0,075	0,090	0,13	0,20
M3	MM16-16016-B90PF-M03 F15M	5,0	0,060	0,075	0,10	0,16
M4	MM16-16016-B90PF-M03 F15M	4,0	0,055	0,065	0,090	0,14
M5	MM16-16016-B90PF-M03 F15M	4,0	0,055	0,065	0,090	0,14
K1	MM16-16016-B90PF-M03 F15M	7,0	0,085	0,10	0,14	0,22
K2	MM16-16016-B90PF-M03 F15M	7,0	0,075	0,090	0,13	0,20
K3	MM16-16016-B90PF-M03 F15M	7,0	0,075	0,090	0,13	0,20
K4	MM16-16016-B90PF-M03 F15M	7,0	0,075	0,090	0,13	0,20
K5	MM16-16016-B90PF-M03 F15M	7,0	0,070	0,085	0,12	0,18
K6	MM16-16016-B90PF-M03 F15M	7,0	0,075	0,090	0,13	0,20
K7	MM16-16016-B90PF-M03 F15M	7,0	0,070	0,085	0,12	0,18
N1	MM16-16016-B90PF-M03 F15M	7,0	0,11	0,13	0,18	0,30
N2	MM16-16016-B90PF-M03 F15M	7,0	0,11	0,13	0,18	0,30
N3	MM16-16016-B90PF-M03 F15M	7,0	0,11	0,13	0,18	0,30
N11	MM16-16016-B90PF-M03 F15M	7,0	0,11	0,13	0,18	0,30
S1	MM16-16016-B90PF-M03 F15M	4,0	0,055	0,065	0,090	0,14
S2	MM16-16016-B90PF-M03 F15M	4,0	0,055	0,065	0,090	0,14
S3	MM16-16016-B90PF-M03 F15M	4,0	0,050	0,060	0,085	0,13
S11	MM16-16016-B90PF-M03 F15M	4,5	0,060	0,075	0,10	0,16
S12	MM16-16016-B90PF-M03 F15M	4,5	0,060	0,075	0,10	0,16
S13	MM16-16016-B90PF-M03 F15M	4,0	0,055	0,065	0,090	0,14
H5	MM16-16016-B90PF-M03 F15M	5,0	0,055	0,065	0,085	0,14
H8	MM16-16016-B90PF-M03 F15M	4,5	0,040	0,048	0,065	0,10
H11	MM16-16016-B90PF-M03 F15M	5,0	0,055	0,065	0,085	0,14
H12	MM16-16016-B90PF-M03 F15M	5,0	0,055	0,065	0,085	0,14
H21	MM16-16016-B90PF-M03 F15M	4,5	0,040	0,048	0,065	0,10

SMG = Seco material group
f_z = mm/tooth
v_c= m/min
a_e/D_c = %
All cutting data are start values

MM16 Z2 – Copy Cutting data

	F15M					F30M					T60M				
SMG	100%	20%	10%	5%	2%	100%	20%	10%	5%	2%	100%	20%	10%	5%	2%
P1	360	470	520	570	640	275	360	400	440	485	225	290	325	355	395
P2	350	460	500	550	620	270	350	390	430	475	215	285	315	345	385
P3	300	395	435	480	540	235	305	345	370	410	190	250	280	300	335
P4	270	350	390	425	475	205	270	300	330	365	170	220	245	265	295
P5	255	335	370	405	455	200	260	290	315	350	160	210	235	255	285
P6	290	380	415	455	510	220	295	325	355	395	180	240	260	285	320
P7	270	355	395	430	480	210	280	305	335	370	170	225	245	270	300
P8	250	330	365	405	450	200	260	290	310	345	160	210	235	250	280
P11	265	345	380	415	465	205	270	295	325	360	165	220	240	265	290
M1	280	370	405	445	500	215	285	315	345	380	175	230	255	280	310
M2	230	305	335	365	410	180	235	260	285	315	145	190	210	230	255
M3	185	240	260	290	325	145	195	210	230	255	115	155	170	185	205
M4	140	190	200	220	250	110	155	160	175	195	90	125	130	145	160
M5	115	160	170	185	205	90	130	135	150	165	75	105	110	120	130
K1	275	365	400	435	495	215	280	310	340	375	170	225	250	275	305
K2	245	320	350	385	430	190	250	275	300	330	150	200	220	240	270
K3	205	270	300	325	365	160	210	230	255	280	130	170	190	205	230
K4	195	260	285	310	350	150	200	220	240	270	125	165	180	195	215
K5	120	155	175	185	210	90	120	135	145	165	75	100	110	120	130
K6	175	225	250	275	305	135	175	195	215	235	110	145	160	170	190
K7	150	200	220	240	270	120	155	175	190	210	95	125	140	150	170
N1	1050	1375	1500	1650	1850	780	1025	1150	1250	1350	630	830	930	1000	1100
N2	840	1100	1225	1325	1500	630	830	920	1000	1100	510	670	750	810	890
N3	560	740	810	890	1000	420	550	620	670	730	340	450	500	540	590
N11	640	840	930	1000	1150	480	630	700	770	830	390	510	570	620	680
S1	65	90	95	105	115	50	75	75	85	90	42	60	60	65	75
S2	50	70	75	85	95	42	60	60	65	75	34	48	49	55	60
S3	46	60	65	70	80	37	50	55	60	65	30	42	43	47	50
S11	90	125	135	145	165	75	100	105	115	130	60	80	85	95	105
S12	55	70	75	85	95	42	60	60	65	75	34	47	49	55	60
S13	42	55	60	65	75	33	47	49	55	60	27	38	39	43	48
H5	55	70	80	85	95	44	60	65	70	75	—	—	—	—	—
H8	55	75	80	90	100	46	60	65	75	80	—	—	—	—	—
H11	70	95	100	110	125	55	75	80	90	100	—	—	—	—	—
H12	115	150	165	180	200	90	120	130	145	160	—	—	—	—	—
H21	55	75	80	90	100	46	60	65	75	80	—	—	—	—	—

MM16 High-Feed Insert selection

SMG		a_p	f_z			
			100%	70%	30%	20%
P1	MM16-16.60-HF-MD12 F30M	0,32	1,3	1,3	1,5	2,0
P2	MM16-16.60-HF-MD12 F30M	0,32	1,4	1,4	1,6	2,1
P3	MM16-16.60-HF-MD12 F30M	0,32	1,3	1,3	1,5	1,9
P4	MM16-16.60-HF-MD12 F30M	0,32	1,3	1,3	1,4	1,9
P5	MM16-16.60-HF-MD12 F30M	0,32	1,2	1,2	1,4	1,8
P6	MM16-16.60-HF-MD12 F30M	0,32	1,2	1,2	1,4	1,8
P7	MM16-16.60-HF-MD12 F30M	0,32	1,2	1,2	1,4	1,8
P8	MM16-16.60-HF-MD12 F30M	0,32	1,3	1,3	1,5	1,9
P11	MM16-16.60-HF-MD12 F30M	0,32	1,2	1,2	1,4	1,8
M1	MM16-16.60-HF-MD12 F30M	0,32	1,4	1,4	1,6	2,1
M2	MM16-16.60-HF-MD12 F30M	0,32	1,2	1,2	1,4	1,8
M3	MM16-16.60-HF-MD12 F30M	0,32	1,0	1,0	1,1	1,4
M4	MM16-16.60-HF-MD12 F30M	0,24	1,0	1,0	1,1	1,4
M5	MM16-16.60-HF-MD12 F30M	0,24	1,0	1,0	1,1	1,4
K1	MM16-16.60-HF-MD12 F30M	0,32	1,4	1,4	1,6	2,1
K2	MM16-16.60-HF-MD12 F30M	0,32	1,2	1,2	1,4	1,8
K3	MM16-16.60-HF-MD12 F30M	0,32	1,2	1,2	1,4	1,8
K4	MM16-16.60-HF-MD12 F30M	0,32	1,2	1,2	1,4	1,8
K5	MM16-16.60-HF-MD12 F30M	0,32	1,1	1,1	1,3	1,6
K6	MM16-16.60-HF-MD12 F30M	0,32	1,2	1,2	1,4	1,8
K7	MM16-16.60-HF-MD12 F30M	0,32	1,1	1,1	1,3	1,6
N1	MM16-16.60-HF-MD12 F30M	0,32	1,7	1,7	2,1	3,2
N2	MM16-16.60-HF-MD12 F30M	0,32	1,7	1,7	2,1	3,2
N3	MM16-16.60-HF-MD12 F30M	0,32	1,7	1,7	2,1	3,2
N11	MM16-16.60-HF-MD12 F30M	0,32	1,7	1,7	2,1	3,2
S1	MM16-16.60-HF-MD12 F30M	0,24	1,0	1,0	1,1	1,4
S2	MM16-16.60-HF-MD12 F30M	0,24	1,0	1,0	1,1	1,4
S3	MM16-16.60-HF-MD12 F30M	0,24	0,95	0,95	1,0	1,3
S11	MM16-16.60-HF-MD12 F30M	0,28	1,1	1,1	1,2	1,5
S12	MM16-16.60-HF-MD12 F30M	0,28	1,1	1,1	1,2	1,5
S13	MM16-16.60-HF-MD12 F30M	0,24	1,0	1,0	1,1	1,4
H5	MM16-16.60-HF-MD12 F30M	0,32	0,85	0,85	0,95	1,1
H8	MM16-16.60-HF-MD12 F30M	0,28	0,70	0,70	0,75	0,90
H11	MM16-16.60-HF-MD12 F30M	0,32	0,85	0,85	0,95	1,1
H12	MM16-16.60-HF-MD12 F30M	0,32	0,85	0,85	0,95	1,1
H21	MM16-16.60-HF-MD12 F30M	0,28	0,70	0,70	0,75	0,90

SMG = Seco material group
f_z = mm/tooth
v_c= m/min
a_e/D_c = %
All cutting data are start values

MM16 High-Feed Cutting data

SMG	F30M			
	100%	70%	30%	20%
P1	210	260	310	315
P2	205	245	295	310
P3	180	215	260	270
P4	160	190	230	240
P5	150	185	220	230
P6	170	210	250	255
P7	160	195	235	240
P8	150	180	215	225
P11	155	190	225	235
M1	165	200	240	250
M2	135	165	200	205
M3	110	135	160	165
M4	85	100	125	130
M5	70	85	105	110
K1	165	195	235	245
K2	145	175	210	215
K3	120	150	175	185
K4	115	140	170	175
K5	75	85	105	105
K6	105	125	150	155
K7	95	110	130	140
N1	610	740	860	860
N2	495	600	700	690
N3	330	395	465	460
N11	375	455	530	530
S1	40	48	60	60
S2	32	38	47	49
S3	28	34	41	43
S11	55	70	80	85
S12	32	39	47	49
S13	26	31	37	39
H5	34	40	48	50
H8	36	43	50	55
H11	43	50	60	65
H12	70	85	100	105
H21	36	43	50	55

Torque wrench and Max RPM information

Recommended RPM for all Seco cutters are shown on each catalogue page.
Normally there is no need for balancing tools for RPM up to 10 000.
However in some cases balancing is necessary,
for instance when using heavy tools and tool holders in small machines

Over 10 000 RPM:
We recommend balancing of tool and tool holders at least separately.
Over 20 000 RPM:
Both tool and tool holders must be balanced at least separately.
Over 30 000 RPM:
Tool and tool holders must be balanced as a unit.
The max RPM in the tables should never be exceeded.

Torque wrench with fixed torque values to ensure the correct tightening force when mounting the Minimaster insert into its holder.
Dynamomentic keys are calibrated according to ISO 6789.

Code key: MM02-4006
MM02 = 2-flute (MM03 = 3-flute)
40 = Torque value 4 Nm
06 = Insert size

Torque wrench (including key end) 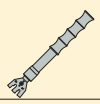	Replaceable key end	For insert	Torque value
MM02-4006	MM02-06	2-flute MM06	4 Nm
MM02-8008	MM02-08	2-flute MM08	8 Nm
MM02-1201012	MM02-1012	2-flute MM10-M12	12 Nm
MM02-16014	MM02-14	2-flute MM12-M14	16 Nm
MM02-1601620	MM02-1620	2-flute MM20	16 Nm
MM03-4006	MM03-06	3-flute MM06	4 Nm
MM03-8008	MM03-08	3-flute MM08	8 Nm
MM03-1201012	MM03-1012	3-flute MM10-M12	12 Nm
MM03-16016	MM03-16	3-flute MM16	16 Nm

The exception is the Minimaster programme where the values are given in the table below.

Cutter	D_c min	Torque values (Nm)	Max RPM
MM06- Steel holder	6	4	80000
-Steel holder	8	4	80000
-90°/89° D/DM holder	6	4	80000
-90°/89° D/DM holder	8	4	80000
MM08 -Steel holder	8	8	80000
-Steel holder	10	8	80000
-90°/89° D/DM holder	8	8	80000
-90°/89° D/DM holder	10	8	76300
MM10 -Steel holder	10	12	80000
-Steel holder	12	12	80000
-90°/89° D/DM holder	10	12	76300
-90°/89° D/DM holder	12	12	63600
MM12 -Steel holder	12	12	80000
Steel holder	14	16	72700
Steel holder	16	16	63600
-90°/89° D/DM holder	12	12	63600
-90°/89° D/DM holder	14	16	54500
-90°/89° D/DM holder	16	16	47600
MM16 -Steel holder	16	16	63600
Steel holder	20	16	50800
-90°/89° D/DM holder	16	16	47600
-90°/89° D/DM holder	20	16	38100

Chamfer milling cutters

R217/220.49-XO12

Chamfer angle 30° / 45° / 60° and 75°

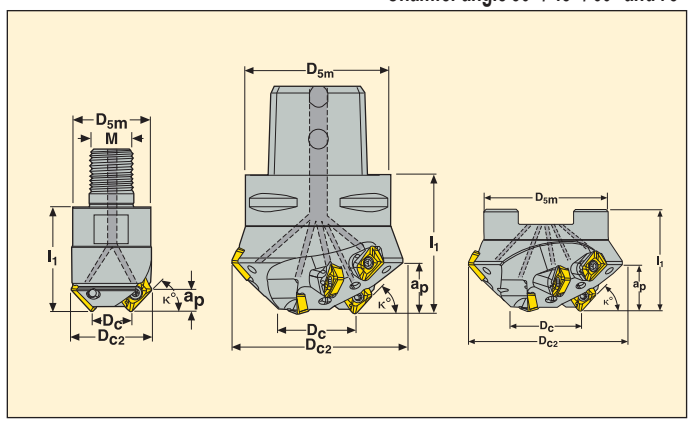

- For insert selection and cutting data recommendations, see page(s) 577-578
- For complete insert programme, see page(s) 641

Part No.	Type of mounting	K	Dimensions in mm a_p	D_{c2}	D_c	D_{5m}	dm_m	l_1	M	Z_c*		KG		Insert
R217.49 -1620.RE-XO12-30.3A	Combimaster	30 °	5,5	38,8	20	30	–	40	M16	3	3	0,3	16400	XO..1204
C6-R217.49 -032-15-XO12-30.3A	Seco-Capto	30 °	15	87,5	32	63	–	60	–	3	9	1,6	10900	XO..1204
R220.49 -0035-15-XO12-30.3A	Arbor	30 °	15	90,5	35	62	27	50	–	3	9	1,1	10700	XO..1204
R217.49 -1616.RE-XO12-45.2A	Combimaster	45 °	7	30,8	16	30	–	40	M16	2	2	0,2	18600	XO..1204
-1620.RE-XO12-45.3A	Combimaster	45 °	7	34,8	20	30	–	40	M16	3	3	0,3	17400	XO..1204
C6-R217.49 -032-22-XO12-45.3A	Seco-Capto	45 °	22,5	76,4	32	63	–	60	–	3	9	1,4	11800	XO..1204
R220.49 -0035-22-XO12-45.3A	Arbor	45 °	22,5	79,4	35	62	27	50	–	3	9	0,8	11600	XO..1204
R217.49 -1216.RE-XO12-60.2A	Combimaster	60 °	9	27	16	23	–	30	M12	2	2	0,1	20100	XO..1204
-1620.RE-XO12-60.3A	Combimaster	60 °	9	30,5	20	30	–	40	M16	3	3	0,2	18400	XO..1204
C6-R217.49 -032-28-XO12-60.3A	Seco-Capto	60 °	28	64	32	63	–	60	–	3	9	1,3	12900	XO..1204
R220.49 -0035-28-XO12-60.3A	Arbor	60 °	28	67	35	62	27	50	–	3	9	0,6	12600	XO..1204
R217.49 -1220.RE-XO12-75.2A	Combimaster	75 °	11	25,4	20	23	–	30	M12	2	2	0,1	20500	XO..1204
R220.49 -0035-31-XO12-75.3A	Arbor	75 °	31	51,5	35	47	22	50	–	3	9	0,4	14400	XO..1204

*Effective number of teeth

Spare Parts

For cutter	Insert screw	Insert key	Arbor screw
R217.49 dia 20 30/45°	C03509-T10P	T10P-3	–
C6-R217.49-..30/45/60°	C03509-T10P	T10P-3	–
R220.49-... 30/45/60°	C03509-T10P	T10P-3	MC6S12X35
R217.49 dia 16 45/60°	C03507-T10P	T10P-3	–
R217.49 dia 20 60/75°	C03507-T10P	T10P-3	–
R220.49-...75°	C03509-T10P	T10P-3	MC6S10X40

Please check availability in current price and stock-list

Torque value 2,0 Nm, Torque keys, see page 690

R217/220.49-XO12 – Insert selection

SMG		f_z		
		100%	30%	10%
P1	XOMX120408TR-ME08 F40M	0,17	0,19	0,30
P2	XOMX120408TR-ME08 F40M	0,18	0,19	0,30
P3	XOMX120408TR-ME08 MP2500	0,17	0,18	0,28
P4	XOMX120408TR-M12 MP2500	0,20	0,22	0,34
P5	XOMX120408TR-M12 MP2500	0,19	0,22	0,32
P6	XOMX120408TR-M12 MP2500	0,19	0,20	0,32
P7	XOMX120408TR-M12 MP2500	0,19	0,20	0,32
P8	XOMX120408TR-M12 MP2500	0,20	0,22	0,34
P11	XOMX120408TR-M12 T350M	0,19	0,20	0,32
M1	XOEX120408R-M07 F40M	0,14	0,15	0,24
M2	XOEX120408R-M07 F40M	0,13	0,14	0,22
M3	XOEX120408R-M07 F40M	0,10	0,11	0,17
M4	XOEX120408R-M07 T350M	0,090	0,10	0,15
M5	XOEX120408R-M07 T350M	0,090	0,10	0,15
K1	XOMX120408TR-M12 MK2050	0,22	0,24	0,36
K2	XOMX120408TR-M12 MK2050	0,19	0,22	0,32
K3	XOMX120408TR-M12 MK2050	0,19	0,22	0,32
K4	XOMX120408TR-M12 MK2050	0,19	0,22	0,32
K5	XOMX120408TR-M12 MK2050	0,17	0,19	0,30
K6	XOMX120408TR-M12 MK2050	0,19	0,22	0,32
K7	XOMX120408TR-M12 MK2050	0,17	0,19	0,30
N1	XOEX120408FR-E06 H15	0,16	0,17	0,26
N2	XOEX120408FR-E06 H15	0,16	0,17	0,26
N3	XOEX120408FR-E06 H15	0,16	0,17	0,26
N11	XOEX120408FR-E06 H15	0,16	0,17	0,26
S1	XOEX120408R-M07 F40M	0,090	0,10	0,15
S2	XOEX120408R-M07 F40M	0,090	0,10	0,15
S3	XOEX120408R-M07 F40M	0,085	0,090	0,14
S11	XOEX120408R-M07 MS2050	0,10	0,11	0,17
S12	XOEX120408R-M07 MS2050	0,10	0,11	0,17
S13	XOEX120408R-M07 MS2050	0,090	0,10	0,15
H5	XOMX120408TR-MD13 MP1500	0,14	0,16	0,24
H11	XOMX120408TR-MD13 MP3000	0,14	0,16	0,24
H12	XOMX120408TR-MD13 MP1500	0,14	0,16	0,24

SMG = Seco material group
f_z = mm/tooth
v_c= m/min
a_e/D_c = %
All cutting data are start values

R217/220.49-XO12 – Cutting data v_c = (m/min)

	MP1500			MP2500			MP3000			T350M			F40M		
SMG	100%	30%	10%	100%	30%	10%	100%	30%	10%	100%	30%	10%	100%	30%	10%
P1	185	215	230	175	205	220	175	200	215	165	195	210	155	185	200
P2	180	210	225	175	200	220	170	200	215	165	190	210	150	180	195
P3	175	200	215	165	190	210	160	190	205	155	180	195	145	170	185
P4	165	190	210	155	185	200	150	180	195	145	175	190	135	160	180
P5	160	190	205	150	180	195	150	175	190	140	170	185	130	160	175
P6	170	200	215	160	190	205	155	185	200	150	180	195	140	170	185
P7	165	195	210	155	185	200	150	180	195	145	175	190	135	165	180
P8	160	190	205	150	180	195	145	175	190	140	170	185	130	160	175
P11	165	195	205	155	185	200	150	180	195	145	175	190	135	165	175
M1	—	—	—	150	175	195	145	175	190	145	170	190	135	165	180
M2	—	—	—	135	165	180	135	160	180	130	160	175	125	150	165
M3	—	—	—	120	145	165	120	145	160	115	140	160	110	135	150
M4	—	—	—	100	125	145	100	120	145	95	120	140	90	110	130
M5	—	—	—	90	110	130	85	110	130	85	105	125	75	100	120
K1	165	195	210	155	185	200	150	180	195	145	175	190	135	165	180
K2	155	185	200	150	175	190	145	170	190	140	165	180	125	155	170
K3	145	170	190	135	165	180	130	160	175	125	155	170	115	140	160
K4	140	170	185	130	160	175	130	155	170	120	150	165	110	140	155
K5	105	135	145	95	125	140	90	120	135	85	115	130	75	105	115
K6	130	160	175	125	150	165	120	145	160	110	140	155	100	130	145
K7	125	150	165	115	140	155	110	140	155	105	130	145	95	120	135
N1	—	—	—	255	285	300	250	280	295	—	—	—	235	260	280
N2	—	—	—	240	265	280	235	265	280	—	—	—	220	245	260
N3	—	—	—	210	235	250	205	230	250	—	—	—	190	215	230
N11	—	—	—	220	245	260	215	240	260	—	—	—	200	225	240
S1	—	—	—	50	70	90	49	65	85	47	60	80	42	55	75
S2	—	—	—	42	55	75	40	55	70	38	50	65	34	46	60
S3	—	—	—	37	49	65	35	46	60	33	44	60	30	40	55
S11	—	—	—	70	95	115	70	90	110	65	90	105	60	80	100
S12	—	—	—	42	55	75	39	55	70	37	50	65	34	47	60
S13	—	—	—	34	45	60	32	43	55	30	40	55	27	37	48
H5	55	75	90	42	60	75	41	60	75	41	55	70	35	50	60
H8	55	75	95	45	60	80	44	60	75	43	60	75	38	50	65
H11	65	95	110	55	75	95	55	75	90	50	75	90	45	65	80
H12	105	130	145	85	110	130	85	110	125	85	110	125	75	100	115

R217/220.49-XO12 – Cutting data v_c = (m/min)

	MK1500			MK2050			MM4500			MS2050			MS2500			H15		
SMG	100%	30%	10%	100%	30%	10%	100%	30%	10%	100%	30%	10%	100%	30%	10%	100%	30%	10%
P1	—	—	—	175	205	220	155	180	195	175	185	190	195	225	240	—	—	—
P2	—	—	—	170	200	215	150	180	195	175	180	185	195	225	235	—	—	—
P3	—	—	—	165	190	205	140	170	185	165	170	170	185	210	225	—	—	—
P4	—	—	—	155	180	200	130	160	175	155	160	160	175	205	220	—	—	—
P5	—	—	—	150	180	195	130	155	170	150	155	160	170	200	215	—	—	—
P6	—	—	—	160	190	205	135	165	180	160	165	165	180	210	225	—	—	—
P7	—	—	—	155	185	200	135	160	175	155	160	165	175	205	220	—	—	—
P8	—	—	—	150	180	195	130	155	170	150	160	160	170	200	215	—	—	—
P11	—	—	—	155	180	195	130	160	175	150	155	160	175	200	215	—	—	—
M1	—	—	—	—	—	—	140	170	185	165	170	175	170	200	210	—	—	—
M2	—	—	—	—	—	—	125	155	170	150	155	155	155	185	200	—	—	—
M3	—	—	—	—	—	—	110	135	150	120	120	120	140	165	180	—	—	—
M4	—	—	—	—	—	—	90	110	130	95	95	90	120	140	160	—	—	—
M5	—	—	—	—	—	—	75	100	120	80	80	75	105	130	150	—	—	—
K1	180	210	225	180	205	220	—	—	—	175	185	190	175	205	220	—	—	—
K2	175	200	220	170	200	215	—	—	—	165	170	175	170	195	210	—	—	—
K3	160	190	205	160	185	200	—	—	—	150	155	160	155	185	200	—	—	—
K4	160	185	200	155	180	200	—	—	—	150	155	155	150	180	195	—	—	—
K5	120	150	165	120	145	160	—	—	—	110	110	110	115	140	160	—	—	—
K6	150	175	195	145	170	190	—	—	—	140	145	145	140	170	185	—	—	—
K7	140	170	185	135	165	180	—	—	—	125	130	130	135	160	175	—	—	—
N1	—	—	—	—	—	—	—	—	—	—	—	—	—	—	—	250	280	295
N2	—	—	—	—	—	—	—	—	—	—	—	—	—	—	—	235	265	280
N3	—	—	—	—	—	—	—	—	—	—	—	—	—	—	—	205	230	245
N11	—	—	—	—	—	—	—	—	—	—	—	—	—	—	—	215	240	255
S1	—	—	—	—	—	—	28	38	49	55	70	90	65	90	110	—	—	—
S2	—	—	—	—	—	—	23	30	40	45	60	70	55	70	90	—	—	—
S3	—	—	—	—	—	—	20	27	35	40	50	65	47	65	80	—	—	—
S11	—	—	—	—	—	—	40	55	70	75	100	115	90	115	135	—	—	—
S12	—	—	—	—	—	—	31	42	55	60	80	95	55	75	95	—	—	—
S13	—	—	—	—	—	—	24	33	42	49	60	75	43	60	75	—	—	—
H5	—	—	—	—	—	—	—	—	—	—	—	—	55	75	90	—	—	—
H8	—	—	—	—	—	—	—	—	—	—	—	—	60	80	95	—	—	—
H11	—	—	—	—	—	—	—	—	—	—	—	—	70	95	110	—	—	—
H12	—	—	—	—	—	—	—	—	—	—	—	—	105	130	145	—	—	—

R417.19-SPMX

Spot face milling

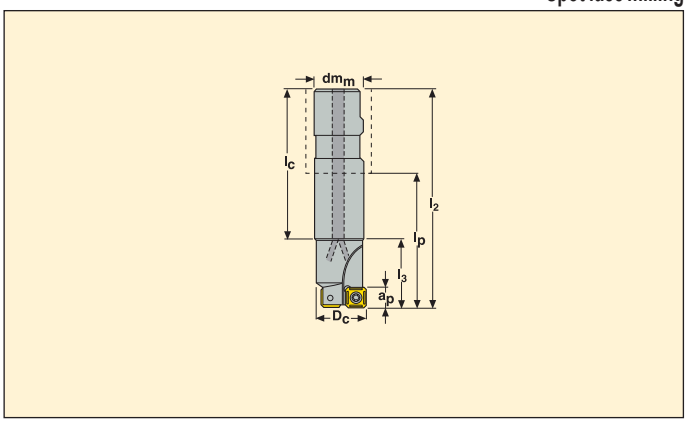

- For insert selection and cutting data recommendations, see page(s) 580-583
- For complete insert programme, see page(s) 633

Part No.	Type of mounting	Dimensions in mm a_p	D_c	dm_m	l_2	l_3	l_p	l_c		Z_c*	KG		() = No of inserts SPMX*	SPMX
R417.19 -2018.3-06A	Cyl.-Weldon	5	18	20	110	20	60	87	2	1	0,2	39200	0602AP/APT(1)	060204(1)
R417.19 -2020.3-07A	Cyl.-Weldon	7	20	20	120	28	70	92	2	1	0,3	26200	0703AP/APT(1)	070304(1)
-2022.3-07A	Cyl.-Weldon	7	22	20	120	70	70	92	2	1	0,3	25000	0703AP/APT(1)	070304(1)
-2524.3-07A	Cyl.-Weldon	7	24	25	130	31	74	98	2	1	0,5	24000	0703AP/APT(1)	070304(1)
R417.19 -2526.3-09A	Cyl.-Weldon	8	26	25	130	74	74	98	2	1	0,4	21200	0903AP/APT(1)	090304(1)
-2530.3-09A	Cyl.-Weldon	8	30	25	130	74	74	90	2	1	0,5	19800	0903AP/APT(1)	090304(1)
-3232.3-09A	Cyl.-Weldon	8	32	32	130	38	70	90	2	1	0,7	19200	0903AP/APT(1)	090304(1)
R417.19 -3236.3-12A	Cyl.-Weldon	11	36	32	130	70	70	90	2	1	0,7	12600	12T3AP/APT(1)	12T308(1)
-3238.3-12A	Cyl.-Weldon	11	38	32	130	70	70	90	2	1	0,7	12300	12T3AP/APT(1)	12T308(1)
-3242.3-12A	Cyl.-Weldon	11	42	32	130	70	70	90	2	1	0,8	12000	12T3AP/APT(1)	12T308(1)

*Effective number of teeth

Spare Parts

For cutter	Insert screw	Insert key
		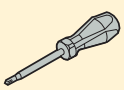
R417.19-06A	C02205-T07P	T07P-3
R417.19-07A	C02506-T07P	T07P-3
R417.19-09A	C03007-T09P	T09P-3
R417.19-12A	C03510-T15P	T15P-3

Please check availability in current price and stock-list

Torque keys, see page 690

R417.19-SPMX06 – Insert selection

SMG		f_z		
		100%	30%	10%
P1	SPMX060204-75 F40M	0,13	0,15	0,22
P2	SPMX060204-75 F40M	0,14	0,15	0,22
P3	SPMX060204-75 F40M	0,13	0,14	0,22
P4	SPMX060204-75 F40M	0,13	0,14	0,22
P5	SPMX060204-75 F40M	0,12	0,13	0,20
P6	SPMX060204-75 F40M	0,12	0,13	0,20
P7	SPMX060204-75 F40M	0,12	0,13	0,20
P8	SPMX060204-75 F40M	0,13	0,14	0,22
P11	SPMX060204-75 F40M	0,12	0,13	0,20
M1	SPMX060204-75 F40M	0,14	0,15	0,22
M2	SPMX060204-75 F40M	0,12	0,13	0,20
M3	SPMX060204-75 F40M	0,10	0,11	0,17
M4	SPMX060204-75 F40M	0,090	0,095	0,15
M5	SPMX060204-75 F40M	0,090	0,095	0,15
K1	SPMX060204-75 F40M	0,14	0,15	0,22
K2	SPMX060204-75 F40M	0,12	0,13	0,20
K3	SPMX060204-75 F40M	0,12	0,13	0,20
K4	SPMX060204-75 F40M	0,12	0,13	0,20
K5	SPMX060204-75 F40M	0,11	0,12	0,19
K6	SPMX060204-75 F40M	0,12	0,13	0,20
K7	SPMX060204-75 F40M	0,11	0,12	0,19

SMG = Seco material group
f_z = mm/tooth
v_c= m/min
a_rD_c = %
All cutting data are start values

R417.19-SPMX06 – Cutting data v_c = (m/min)

SMG	F40M		
	100%	30%	10%
P1	185	215	230
P2	185	215	230
P3	170	200	215
P4	160	185	200
P5	155	185	200
P6	165	195	210
P7	160	190	205
P8	155	180	200
P11	160	185	205
M1	165	190	210
M2	145	175	190
M3	125	150	170
M4	100	125	140
M5	80	110	125
K1	160	190	205
K2	150	180	195
K3	135	160	180
K4	130	160	175
K5	80	110	125
K6	115	145	160
K7	105	130	150

R417.19-SPMX07 – Insert selection

SMG		f_z		
		100%	30%	10%
P1	SPMX070304-75 F40M	0,13	0,14	0,22
P2	SPMX070304-75 F40M	0,13	0,15	0,22
P3	SPMX070304-75 F40M	0,13	0,14	0,22
P4	SPMX070304-75 F40M	0,12	0,14	0,20
P5	SPMX070304-75 F40M	0,12	0,13	0,20
P6	SPMX070304-75 F40M	0,12	0,13	0,20
P7	SPMX070304-75 F40M	0,12	0,13	0,20
P8	SPMX070304-75 F40M	0,13	0,14	0,22
P11	SPMX070304-75 F40M	0,12	0,13	0,20
M1	SPMX070304-75 F40M	0,13	0,15	0,22
M2	SPMX070304-75 F40M	0,12	0,13	0,20
M3	SPMX070304-75 F40M	0,10	0,11	0,16
M4	SPMX070304-75 F40M	0,085	0,095	0,15
M5	SPMX070304-75 F40M	0,085	0,095	0,15
K1	SPMX070304-75 F40M	0,13	0,15	0,22
K2	SPMX070304-75 F40M	0,12	0,13	0,20
K3	SPMX070304-75 F40M	0,12	0,13	0,20
K4	SPMX070304-75 F40M	0,12	0,13	0,20
K5	SPMX070304-75 F40M	0,11	0,12	0,18
K6	SPMX070304-75 F40M	0,12	0,13	0,20
K7	SPMX070304-75 F40M	0,11	0,12	0,18

SMG = Seco material group
f_z = mm/tooth
v_c= m/min
a_rD_c = %
All cutting data are start values

R417.19-SPMX07 – Cutting data v_c = (m/min)

SMG	F40M		
	100%	30%	10%
P1	180	210	225
P2	180	210	225
P3	165	195	210
P4	155	185	200
P5	150	180	195
P6	165	190	210
P7	155	185	200
P8	150	180	195
P11	155	185	200
M1	160	185	205
M2	140	170	185
M3	120	145	165
M4	95	125	140
M5	80	105	120
K1	160	185	205
K2	145	175	190
K3	130	160	175
K4	125	155	170
K5	80	105	120
K6	110	140	155
K7	100	130	145

R417.19-SPMX09 – Insert selection

SMG		f_z		
		100%	30%	10%
P1	SPMX090304-75 F40M	0,13	0,14	0,22
P2	SPMX090304-75 F40M	0,13	0,15	0,22
P3	SPMX090304-75 F40M	0,13	0,14	0,22
P4	SPMX090304-75 F40M	0,12	0,14	0,20
P5	SPMX090304-75 F40M	0,12	0,13	0,20
P6	SPMX090304-75 F40M	0,12	0,13	0,20
P7	SPMX090304-75 F40M	0,12	0,13	0,20
P8	SPMX090304-75 F40M	0,13	0,14	0,22
P11	SPMX090304-75 F40M	0,12	0,13	0,20
M1	SPMX090304-75 F40M	0,13	0,15	0,22
M2	SPMX090304-75 F40M	0,12	0,13	0,20
M3	SPMX090304-75 F40M	0,10	0,11	0,16
M4	SPMX090304-75 F40M	0,085	0,095	0,14
M5	SPMX090304-75 F40M	0,085	0,095	0,14
K1	SPMX090304-75 F40M	0,13	0,15	0,22
K2	SPMX090304-75 F40M	0,12	0,13	0,20
K3	SPMX090304-75 F40M	0,12	0,13	0,20
K4	SPMX090304-75 F40M	0,12	0,13	0,20
K5	SPMX090304-75 F40M	0,11	0,12	0,18
K6	SPMX090304-75 F40M	0,12	0,13	0,20
K7	SPMX090304-75 F40M	0,11	0,12	0,18

SMG = Seco material group
f_z = mm/tooth
v_c= m/min
a_rD_c = %
All cutting data are start values

R417.19-SPMX09 – Cutting data v_c = (m/min)

SMG	F40M		
	100%	30%	10%
P1	180	210	225
P2	180	210	225
P3	165	195	210
P4	155	180	200
P5	150	180	195
P6	165	190	210
P7	155	185	200
P8	150	180	195
P11	155	185	200
M1	160	185	205
M2	140	170	185
M3	120	145	165
M4	95	125	140
M5	80	105	120
K1	160	185	205
K2	145	175	190
K3	130	160	175
K4	125	155	170
K5	80	105	120
K6	110	140	155
K7	100	130	145

R417.19-SPMX12 – Insert selection

SMG		f_z		
		100%	30%	10%
P1	SPMX12T308-75 F40M	0,13	0,14	0,22
P2	SPMX12T308-75 F40M	0,14	0,15	0,22
P3	SPMX12T308-75 F40M	0,13	0,14	0,22
P4	SPMX12T308-75 F40M	0,13	0,14	0,22
P5	SPMX12T308-75 F40M	0,12	0,13	0,20
P6	SPMX12T308-75 F40M	0,12	0,13	0,20
P7	SPMX12T308-75 F40M	0,12	0,13	0,20
P8	SPMX12T308-75 F40M	0,13	0,14	0,22
P11	SPMX12T308-75 F40M	0,12	0,13	0,20
M1	SPMX12T308-75 F40M	0,14	0,15	0,22
M2	SPMX12T308-75 F40M	0,12	0,13	0,20
M3	SPMX12T308-75 F40M	0,10	0,11	0,17
M4	SPMX12T308-75 F40M	0,090	0,095	0,15
M5	SPMX12T308-75 F40M	0,090	0,095	0,15
K1	SPMX12T308-75 F40M	0,14	0,15	0,22
K2	SPMX12T308-75 F40M	0,12	0,13	0,20
K3	SPMX12T308-75 F40M	0,12	0,13	0,20
K4	SPMX12T308-75 F40M	0,12	0,13	0,20
K5	SPMX12T308-75 F40M	0,11	0,12	0,19
K6	SPMX12T308-75 F40M	0,12	0,13	0,20
K7	SPMX12T308-75 F40M	0,11	0,12	0,19

SMG = Seco material group
f_z = mm/tooth
v_c= m/min
a_pD_c = %
All cutting data are start values

R417.19-SPMX12 – Cutting data v_c = (m/min)

SMG	F40M		
	100%	30%	10%
P1	180	210	225
P2	180	210	225
P3	165	195	210
P4	155	180	200
P5	150	180	195
P6	160	190	205
P7	155	185	200
P8	150	175	195
P11	155	180	200
M1	160	185	205
M2	140	170	185
M3	120	145	165
M4	95	125	140
M5	80	105	120
K1	160	185	200
K2	145	175	190
K3	130	160	175
K4	125	155	170
K5	80	105	120
K6	110	140	155
K7	100	130	145

220.70-06/09

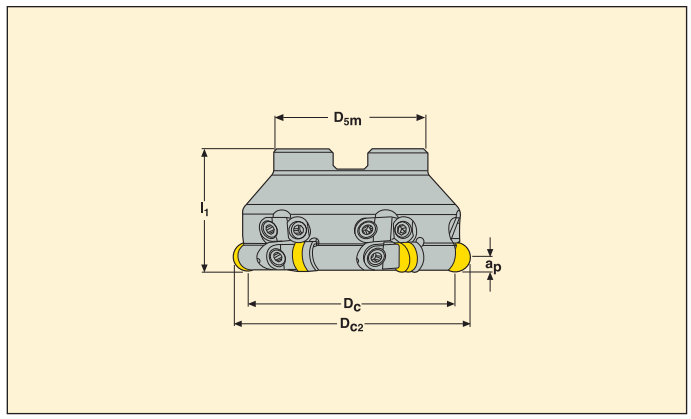

- For insert selection and cutting data recommendations, see page(s) 673
- For complete insert programme, see page(s) 654, 656

Pitch	Part No.	Type of mounting	Dimensions in mm a_p	D_c	D_{c2}	D_{5m}	dm_m	l_1		KG		Insert
	R220.70 -0040-06-6		2	40	46,35	35	16	40	6	0,3	15900	RN..06
	-0050-06-8		2	50	56,35	47	22	40	8	0,5	12700	RN..06
Normal												
	R220.70 -0063-09-6	Arbor	3	63	72,5	47	22	40	6	0,7	10200	RN..09
	-0080-09-6	Arbor	3	80	89,5	62	27	50	6	1,3	9100	RN..09
	-0100-09-8	Arbor	3	100	109,5	77	32	50	8	2,0	8100	RN..09
	-0125-09-8	Arbor	3	125	134,5	90	40	63	8	3,7	7200	RN..09/SNEX12*
	-8160-09-10	Arbor	3	160	169,5	90	40	63	10	5,6	6400	RN..09/SNEX12*
	-8200-09-12	Arbor	3	200	209,5	130	60	63	12	8,5	5700	RN..09/SNEX12*

*Wiper insert

Spare Parts

For cutter	Wedge screw	Wedge	Shim screw	Setting key	Setting gauge	Key	Insert shim	Gauge screw	Arbor screw
R220.70-06-6		CW0405				T08P-2			TCEI0825
R220.70-06-8	LD4012-T08P	CW0405				T08P-2			220.17-692
R220.70-0063	LD6018T-T15P	CW0608M	174.10-652-T07P	T15P-4ST	AS6011F	–	117.10-620	LD6019-T15P	220.17-692
R220.70-0080-0100	LD6018T-T15P	CW0608M	174.10-652-T07P	T15P-4ST		–	117.10-620	LD6019-T15P	
R220.70-0080-0100	LD6018T-T15P	CW0608M	174.10-652-T07P	T15P-4ST	AS6011F	–	117.10-620	LD6019-T15P	
R220.70-0125-8200	LD6018T-T15P	CW0608M	174.10-652-T07P	T15P-4ST	AS6011F	–	117.10-620	LD6019-T15P	

Please check availability in current price and stock-list
Torque value 1,2 Nm, Torque keys, see page 690

Setting wedge AS6011, Insert wedge CW0608S, Anvil screw F94009-T09P and Anvil 268-621 are also included with cutters with dia 125-200

220.74-09

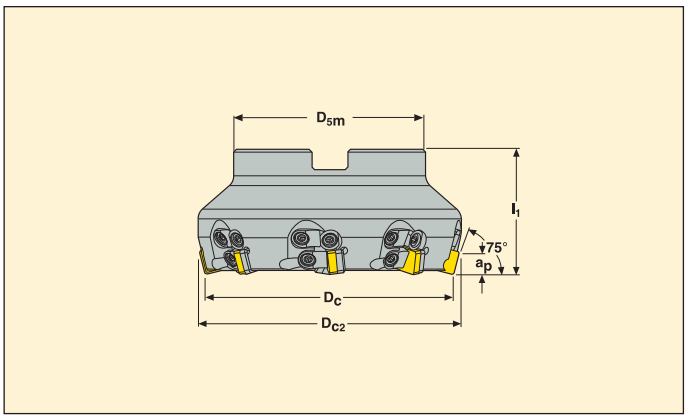

- For insert selection and cutting data recommendations, see page(s) 673
- For complete insert programme, see page(s) 656

Pitch	Part No.	Type of mounting	Dimensions in mm a_p	D_c	D_{c2}	D_{5m}	dm_m	l_1		KG		Insert
Normal												
	R220.74 -0063-09-6	Arbor	3	63	65,3	47	22	40	6	0,7	10200	SN..09..
	-0080-09-6	Arbor	3	80	82,3	62	27	50	6	1,4	9100	SN..09..
	-0100-09-8	Arbor	3	100	102,3	77	32	50	8	2,0	8100	SN..09..
	-0125-09-8	Arbor	3	125	127,3	90	40	63	8	3,7	7200	SN..09/SNEX12*
	-8160-09-10	Arbor	3	160	162,3	90	40	63	10	6,3	6400	SN..09/SNEX12*
	-0063-12	Arbor	9	63	66	47	22	40	5	0,6	10200	SN..09/SNEX12*
	-0125-12	Arbor	9	125	128	90	40	63	10	3,5	7200	SN..09/SNEX12*
	-8200-09-12	Arbor	3	200	202,3	130	60	63	12	8,9	5700	SN..09/SNEX12*

*Wiper insert

Spare Parts

For cutter	Wedge screw	Wedge	Shim screw	Setting screw	Setting key	Setting gauge	Insert shim	Arbor screw
R220.74-0063-6	LD6018T-T15P	CW0608M	174.10-652-T07P	LD6019-T15P	T15P-4ST	AS6011	174.10-620	220.17-692
R220.74-0080-0100	LD6018T-T15P	CW0608M	174.10-652-T07P	LD6019-T15P	T15P-4ST	AS6011	174.10-620	–
R220.74-0125-8160	LD6018T-T15P	CW0608M	174.10-652-T07P	LD6019-T15P	T15P-4ST	AS6011	174.10-620	–
R220.74-0063-12	–	–	F94009-T09P	–	–	–	174.10-621	220.17-691
R220.74-0125-12	–	–	F94009-T09P	–	–	–	174.10-621	–
R220.74-8200-12	LD6018T-T15P	CW0608M	174.10-652-T07P	LD6019-T15P	T15P-4ST	AS6011	174.10-620	–

Please check availability in current price and stock-list
Torque value 1,2 Nm, Torque keys, see page 690

Anvil 268-621 are also included with cutters with dia 125-200.
Anvil screw F94009-T09P are included with cutters dia 200

R220.68-T16C

For PCBN inserts

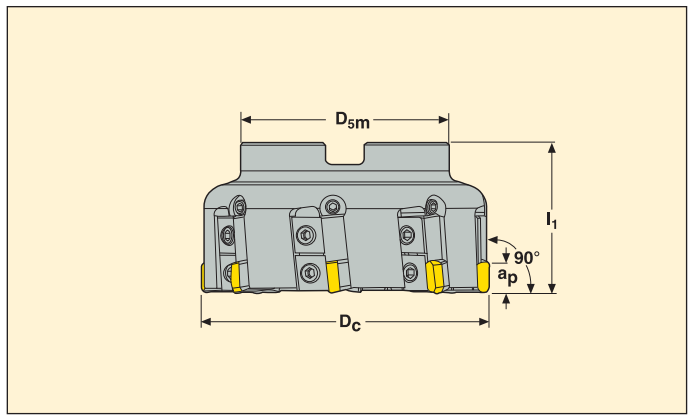

- For insert selection and cutting data recommendations, see page(s) 673
- For complete insert programme, see page(s) 658

Part No.	Type of mounting	Dimensions in mm					KG		Insert
		a_p	D_c	D_{5m}	l_1				
R220.68 -0063-T16C-4	Arbor	5	63	47	63	4	1,1	12000	TNGN1604..
-0080-T16C-5	Arbor	5	80	62	63	5	1,7	9600	TNGN1604..
-0100-T16C-6	Arbor	5	100	77	63	6	2,7	7600	TNGN1604..
-0125-T16C-8	Arbor	5	125	90	63	8	3,4	6100	TNGN1604..
-8160-T16C-10	Arbor	5	160	90	63	10	5,9	4800	TNGN1604..

Spare Parts

For cutter	Wedge screw	Wedge key	Wedge clamp	Setting key	Setting gauge	Insert wedge	Cassette	Arbor screw
R220.68-0063	LD8020-T25P	T25P-4	L257.9-120M	T15P-3	AU1114T-T15P	L257.9-120-T16	TN16PR	220.17-696
R220.68-0080	LD8020-T25P	T25P-4	L257.9-120M	T15P-3	AU1114T-T15P	L257.9-120-T16	TN16PR	MC6S12X40
R220.68-0100	LD8020-T25P	T25P-4	L257.9-120M	T15P-3	AU1114T-T15P	L257.9-120-T16	TN16PR	220.17-694
R220.68-0125-8160	LD8020-T25P	T25P-4	L257.9-120M	T15P-3	AU1114T-T15P	L257.9-120-T16	TN16PR	–

Torque value 6,0 Nm. Torque keys, see page 690

R220.68-T11C

For PCBN inserts

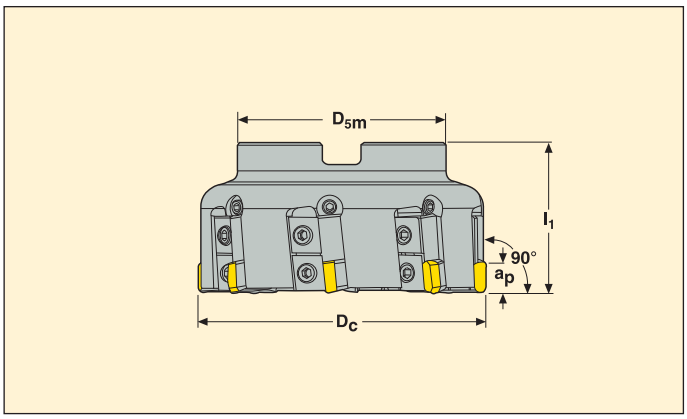

- For insert selection and cutting data recommendations, see page(s) 673
- For complete insert programme, see page(s) 658

Part No.	Type of mounting	Dimensions in mm					KG		Insert
		a_p	D_c	D_{5m}	l_1				
R220.68 -0063-T11C-4	Arbor	3	63	47	63	4	1,1	20600	TN..1103..
-0080-T11C-5	Arbor	3	80	62	63	5	1,7	16700	TN..1103..
-0100-T11C-6	Arbor	3	100	77	63	6	2,7	13400	TN..1103..
-0125-T11C-8	Arbor	3	125	90	63	8	3,4	10400	TN..1103..
-8160-T11C-10	Arbor	3	160	90	63	10	5,6	8400	TN..1103..

Spare Parts

For cutter	Wedge screw	Wedge key	Wedge clamp	Setting key	Setting gauge	Insert wedge	Cassette	Arbor screw
R220.68-0063	LD8020-T25P	T25P-4	L257.9-120M	T15P-3	AU1114T-T15P	L257.9-120-T11	TN11PR	220.17-696
R220.68-0080	LD8020-T25P	T25P-4	L257.9-120M	T15P-3	AU1114T-T15P	L257.9-120-T11	TN11PR	MC6S12X40
R220.68-0100	LD8020-T25P	T25P-4	L257.9-120M	T15P-3	AU1114T-T15P	L257.9-120-T11	TN11PR	220.17-694
R220.68-0125-8160	LD8020-T25P	T25P-4	L257.9-120M	T15P-3	AU1114T-T15P	L257.9-120-T11	TN11PR	–

Torque value 6,0 Nm. Torque keys, see page 690

EPB 5820-5821 – HSK-A to Combimaster® holders

HSK-A/ ISO 12164-1-A

Design 1 (5820)

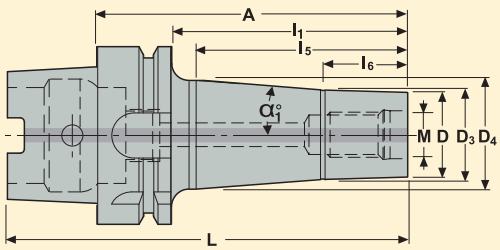

Design 2 (5821)

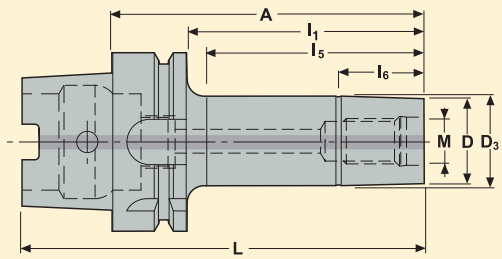

Machine side Taper	Workpiece side Combimaster size	Part No.	Dimensions in mm A	L	l_1	l_5	l_6	D	D_3	D_4	α_1°	Design	Balan-cing	KG
HSK-A40														
	M6	E930258200645	45	65	25	15	10,0	11,0	11,7	13,5	10,2	1	1	0,30
HSK-A63														
	M6	E930458200660	60	92	34	25	10,0	11,0	11,7	14,5	5,3	1	1	0,70
	M8	E930458200860	60	92	34	25	10,0	13,5	15,7	18,5	5,3	1	1	0,70
	M8	E930458200885	85	117	59	50	15,0	13,5	15,7	20,0	3,5	1	1	0,80
	M10	E930458201060	60	92	34	25	10,0	18,5	19,7	23,0	6,3	1	1	0,80
	M10	E930458201085	85	117	59	50	15,0	18,5	19,7	24,5	3,9	1	1	0,80
	M10	E9304582010135	135	167	109	100	20,0	18,5	19,7	27,5	2,8	1	1	1,00
	M10	E930458211060	60	92	34	25	10,0	18,5	18,5	–	–	2	1	0,70
	M12	E930458201260	60	92	34	25	10,0	23,0	24,7	28,5	7,2	1	1	0,80
	M12	E930458201285	85	117	59	50	20,0	23,0	24,7	30,0	5,0	1	1	0,90
	M12	E9304582012110	110	142	84	75	25,0	23,0	24,7	31,5	3,9	1	1	1,00
	M12	E9304582012135	135	167	109	100	30,0	23,0	24,7	33,0	3,4	1	1	1,20
	M12	E930458211260	60	92	34	25	10,0	23,0	23,5	–	–	2	1	0,80
	M12	E930458211285	85	117	59	50	20,0	23,0	23,5	–	–	2	1	0,80
	M16	E930458201660	60	92	34	25	10,0	30,0	31,7	35,5	6,9	1	1	0,90
	M16	E930458201685	85	117	59	50	20,0	30,0	31,7	37,0	5,0	1	1	1,10
	M16	E9304582016110	110	142	84	75	25,0	30,0	31,7	38,5	3,9	1	1	1,20
	M16	E9304582016135	135	167	109	100	30,0	30,0	31,7	40,0	3,4	1	1	1,40
	M16	E9304582016185	185	217	159	150	35,0	30,0	31,7	50,0	4,5	1	1	2,10
	M16	E930458211685	85	117	59	50	20,0	30,0	30,5	–	–	2	1	1,00
	M16	E9304582116110	110	142	84	75	25,0	30,0	30,5	–	–	2	1	1,10
	M16	E9304582116135	135	167	109	100	30,0	30,0	30,5	–	–	2	1	1,20
	M20	E930458202065	65	97	39	30	10,0	36,5	37,5	44,5	6,4	1	1	1,00
	M20	E9304582020110	110	142	84	75	25,0	36,5	37,5	44,5	6,5	1	1	1,40
	M20	E9304582120110	110	142	84	75	25,0	36,5	37,0	–	–	2	1	1,20
HSK-A100														
	M8	E930658200885	85	135	56	50	15,0	13,5	15,7	24,5	7,2	1	1	2,10
	M10	E930658201085	85	135	56	50	15,0	18,5	19,7	29,0	7,6	1	1	2,20
	M10	E9306582010110	110	160	81	75	20,0	18,5	19,7	32,5	6,6	1	1	2,30
	M12	E930658201285	85	135	56	50	20,0	23,0	24,7	35,0	9,7	1	1	2,30
	M12	E9306582012110	110	160	81	75	25,0	23,0	24,7	38,0	7,6	1	1	2,40
	M12	E9306582012135	135	185	106	100	30,0	23,0	24,7	42,5	6,6	1	1	2,60
	M12	E9306582012185	185	235	156	150	30,0	23,0	24,7	42,5	4,2	1	1	2,90
	M16	E930658201685	85	135	56	50	30,0	30,0	31,7	42,5	10,2	1	1	2,40
	M16	E9306582016135	135	185	106	100	30,0	30,0	31,7	49,0	7,0	1	1	2,90
	M16	E9306582016185	185	235	156	150	35,0	30,0	31,7	50,0	4,5	1	1	3,30
	M20	E930658202075	75	125	46	40	20,0	36,5	37,5	47,5	14,1	1	1	2,40
	M20	E9306582020135	135	185	106	100	30,0	36,5	37,5	54,5	6,9	1	1	3,10
	M20	E9306582120110	110	160	81	75	25,0	36,5	37,0	–	–	2	1	2,60

Please check availability in current price and stock-list

For HSK sealing plugs, coolant tubes and tube spanners, see page(s) [XXX]

EPB 5820-5821 – Combimaster arbors

DIN 69871-ADB/ CAT Metric Combined

Design 1 (5820)

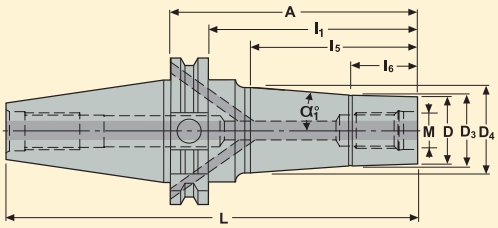

Design 2 (5821)

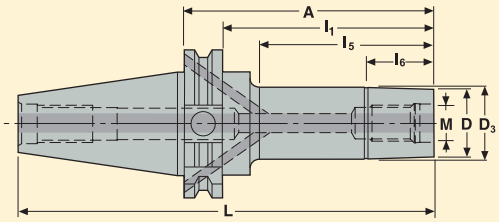

Taper	Connecting thread size	Part No.	Dimensions in mm								α_1°	Design	Balan-cing	KG
			A	L	l_1	l_5	l_6	D	D_3	D_4				
DIN40 ADB/ CAT40														
	M6	E347658200660	60	128,4	41	25	10	11,0	11,7	14,5	5,3	1	1	1,00
	M8	E347658200860	60	128,4	41	25	10	13,5	15,7	18,5	5,3	1	1	1,00
	M10	E347658201040	40	108,4	21	5	5	18,5	19,7	19,7	6,8	1	1	1,00
	M10	E347658201060	60	128,4	41	25	10	18,5	19,7	23,0	6,3	1	1	1,00
	M10	E347658201085	85	153,4	66	50	15	18,5	19,7	24,5	3,9	1	1	1,10
	M10	E3476582010135	135	203,4	116	100	20	18,5	19,7	27,5	2,8	1	1	1,30
	M10	E347658211060	60	128,4	41	25	10	18,5	18,5	–	–	2	1	1,00
	M12	E347658201240	40	108,4	21	5	5	23,0	24,7	24,7	9,6	1	1	1,00
	M12	E347658201260	60	128,4	41	25	10	23,0	24,7	28,5	7,2	1	1	1,10
	M12	E347658201285	85	153,4	66	50	20	23,0	24,7	30,0	5,0	1	1	1,20
	M12	E3476582012110	110	178,4	91	75	25	23,0	24,7	31,5	3,9	1	1	1,30
	M12	E3476582012185	185	253,4	166	150	30	23,0	24,7	42,5	4,2	1	1	1,80
	M12	E347658211260	60	128,4	41	25	10	23,0	23,5	–	–	2	1	1,10
	M12	E347658211285	85	153,4	66	50	20	23,0	23,5	–	–	2	1	1,10
	M16	E347658201640	40	108,4	21	5	5	30,0	31,7	31,7	9,6	1	1	1,00
	M16	E347658201660	60	128,4	41	25	10	30,0	31,7	35,5	7,2	1	1	1,10
	M16	E347658201685	85	153,4	66	50	20	30,0	31,7	37,0	5,0	1	1	1,30
	M16	E3476582016110	110	178,4	91	75	25	30,0	31,7	38,5	3,9	1	1	1,50
	M16	E3476582016135	135	203,4	116	100	30	30,0	31,7	40,5	3,6	1	1	1,60
	M16	E3476582016185	185	253,4	166	150	35	30,0	31,7	43,5	2,9	1	1	2,10
	M16	E347658211685	85	153,4	66	50	20	30,0	30,5	–	–	2	1	1,20
	M16	E3476582116110	110	178,4	91	75	25	30,0	30,5	–	–	2	1	1,30
	M16	E3476582116135	135	203,4	116	100	30	30,0	30,5	–	–	2	1	1,50

Spare Parts

For	Plug
DIN40	950A0406

Please check availability in current price and stock-list

EPB 5820-5821 – Combimaster arbors

DIN 69871-ADB/ CAT Metric Combined

Design 1 (5820)

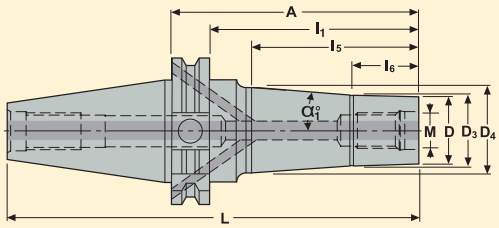

Design 2 (5821)

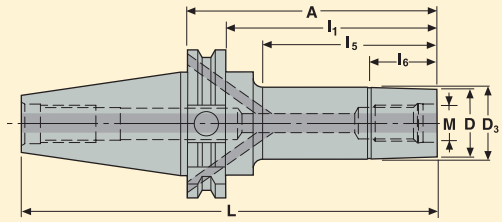

Taper	Connecting thread size	Part No.	Dimensions in mm A	L	l_1	l_5	l_6	D	D_3	D_4	α_1°	Design	Balan-cing	KG
DIN50 ADB/ CAT50														
	M12	E347858201295	95	196,7	76	50	20	23,0	24,7	35,0	9,7	1	1	3,30
	M12	E3478582012145	145	246,7	126	100	30	23,0	24,7	41,0	6,6	1	1	3,60
	M12	E3478582012195	195	296,7	176	150	30	23,0	24,7	42,5	4,2	1	1	3,90
	M12	E3478582012245	245	346,7	226	200	30	23,0	24,7	47,5	3,8	1	1	4,50
	M16	E347858201695	95	196,7	76	50	20	30,0	31,7	42,5	10,2	1	1	3,40
	M16	E3478582016145	145	246,7	126	100	30	30,0	31,7	49,0	7,0	1	1	4,10
	M16	E3478582016195	195	296,7	176	150	35	30,0	31,7	50,0	4,5	1	1	4,60
	M16	E3478582016245	245	346,7	226	200	35	30,0	31,7	55,0	4,0	1	1	5,00
	M16	E3478582016295	295	396,7	276	250	35	30,0	31,7	59,5	3,7	1	1	5,80

Spare Parts

For	Plug
DIN50	950A0606

Please check availability in current price and stock-list

EPB 5820-5821 – BT JIS to Combimaster® holders

BT JIS B 6339-ADB

Design 1 (5820)

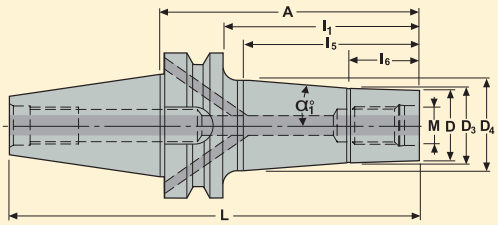

Design 2 (5821)

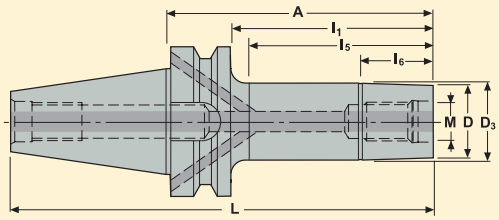

Machine side Taper	Workpiece side Combimaster size	Part No.	Dimensions in mm A	L	l_1	l_5	l_6	D	D_3	D_4	α_1°	Design	Balan-cing	KG
BT40 ADB														
	M6	E341458200660	60	125,4	33	25	10	11,0	11,7	14,5	5,3	1	1	1,00
	M8	E341458210860	60	125,4	33	25	10	13,5	14,5	–	–	2	1	1,00
	M10	E341458201085	85	150,4	58	50	15	18,5	19,7	24,5	3,9	1	1	1,10
	M10	E3414582010135	135	200,4	108	100	20	18,5	19,7	27,5	2,8	1	1	1,30
	M10	E341458211060	60	125,4	33	25	10	18,5	19,7	–	–	2	1	1,00
	M12	E341458201240	40	105,4	13	5	5	23,0	24,7	24,7	9,6	1	1	1,00
	M12	E341458201260	60	125,4	33	25	10	23,0	24,7	28,5	7,2	1	1	1,10
	M12	E341458201285	85	150,4	58	50	20	23,0	24,7	30,0	5,0	1	1	1,20
	M12	E3414582012110	110	175,4	83	75	25	23,0	24,7	31,5	3,9	1	1	1,30
	M12	E3414582012135	135	200,4	108	100	30	23,0	24,7	33,0	3,4	1	1	1,40
	M12	E341458211260	60	125,4	33	25	10	23,0	23,5	–	–	2	1	1,10
	M12	E341458211285	85	150,4	58	50	20	23,0	23,5	–	–	2	1	1,10
	M16	E341458201640	40	105,4	13	5	5	30,0	31,7	31,7	9,6	1	1	1,10
	M16	E341458201660	60	125,4	33	25	10	30,0	31,7	35,5	7,2	1	1	1,20
	M16	E341458201685	85	150,4	58	50	20	30,0	31,7	37,0	5,0	1	1	1,30
	M16	E3414582016110	110	175,4	83	75	25	30,0	31,7	38,5	3,9	1	1	1,50
	M16	E3414582016135	135	200,4	108	100	30	30,0	31,7	40,5	3,6	1	1	1,70
	M16	E3414582016185	185	250,4	158	150	35	30,0	31,7	50,0	4,5	1	1	2,40
	M20	E3414582020110	110	175,4	83	75	25	36,5	37,5	44,5	4,0	1	1	1,70
	M20	E341458212045	45	110,4	18	10	5	36,5	37,0	–	–	2	1	1,10
	M20	E341458212085	85	150,4	58	50	20	36,5	37,0	–	–	2	1	1,40

Spare Parts

For	Plug
BT40	950A0406

Please check availability in current price and stock-list

EPB 5820-5821 – BT JIS to Combimaster® holders

BT JIS B 6339-ADB

Design 1 (5820)

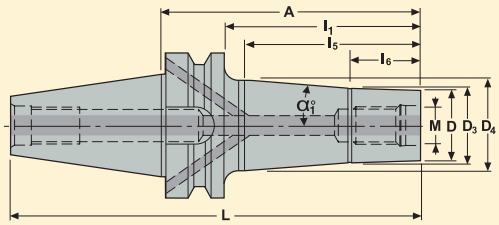

Design 2 (5821)

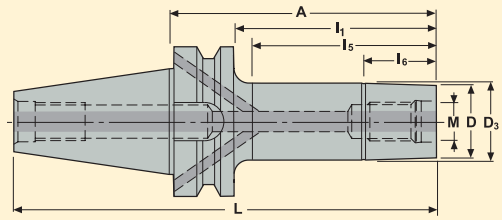

Machine side Taper	Workpiece side Combimaster size	Part No.	Dimensions in mm A	L	l_1	l_5	l_6	D	D_3	D_4	α_1°	Design	Balan-cing	KG
BT50 ADB														
	M12	E341658201295	95	196,8	57	50	20	23,0	24,7	35,0	9,7	1	1	3,80
	M12	E3416582012145	145	246,8	107	100	30	23,0	24,7	41,0	6,6	1	1	4,10
	M12	E3416582012195	195	296,8	157	150	30	23,0	24,7	42,5	4,2	1	1	4,40
	M16	E341658201695	95	196,8	57	50	20	30,0	31,7	42,5	10,2	1	1	3,90
	M16	E3416582016145	145	246,8	107	100	30	30,0	31,7	49,0	7,0	1	1	4,40
	M16	E3416582016195	195	296,9	157	150	35	30,0	31,7	50,0	4,5	1	1	4,80
	M16	E3416582016245	245	346,8	207	200	35	30,0	31,7	55,0	4,0	1	1	5,40
	M16	E3416582016295	295	396,8	257	250	35	30,0	31,7	59,5	3,7	1	1	6,30
	M20	E341658202095	95	196,8	57	50	20	36,5	37,5	48,5	10,4	1	1	4,00
	M20	E3416582020145	145	246,8	107	100	30	36,5	37,5	54,5	6,9	1	1	4,60
	M20	E3416582120110	110	211,8	72	65	25	36,5	37,0	–	–	2	1	4,10

Spare Parts

For	Plug
BT50	950A0606

Please check availability in current price and stock-list

EPB 5820 – Combimaster® to Combimaster® extensions

Combimaster®

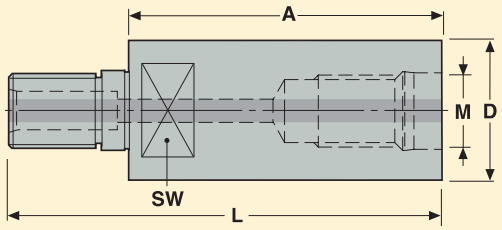

Machine side Combimaster (shank) size	Workpiece side Combimaster (bore) size	Part No.	Dimensions in mm A	L	D	SW	Balancing	KG
M6								
	M6	BS00658200625	25	38,5	11,0	9	2	0,10
M8								
	M8	BS00858200830	30	47,75	13,5	11	2	0,10
M10								
	M10	BS01058201035	35	53,75	18,5	15	2	0,10
M12								
	M12	BS01258201240	40	61,75	23,0	19	2	0,20
M16								
	M16	BS01658201640	40	62,75	30,0	26	2	0,20
M20								
	M20	BS02058202045	45	72	36,5	32	2	0,30

Please check availability in current price and stock-list

EPB 5820 – Combimaster to® Combimaster® reducers

Combimaster®

Design 1

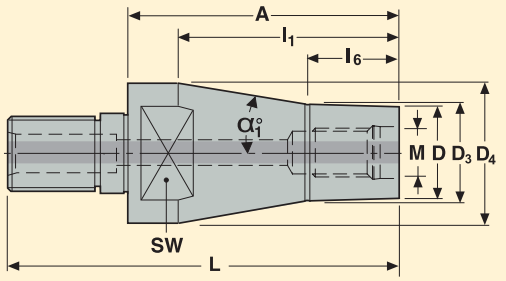

Design 2

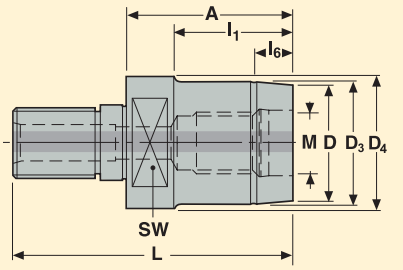

Machine side Combimaster (shank) size	Workpiece side Combimaster (bore) size	Part No.	Dimensions in mm A	L	l_1	l_6	D	D_3	D_4	SW	α_1°	Design	Balan-cing	KG
M8														
	M6	BS00858200625	25	42,75	14	6	11,0	11,7	13,5	11	6,4	1	2	0,10
M10														
	M6	BS01058200635	35	53,75	22	6	11,0	11,7	18,5	15	12,0	1	2	0,10
	M8	BS01058200830	30	48,75	17	8	13,5	15,7	18,5	15	8,8	1	2	0,10
M12														
	M10	BS01258201035	35	56,75	24	8	18,5	19,7	23,0	19	5,9	1	2	0,10
M16														
	M10	BS01658201060	60	82,75	49	8	18,5	19,7	30,0	26	7,2	1	2	0,30
	M12	BS01658201240	40	62,75	29	8	23,0	24,7	30,0	26	7,2	1	2	0,20
M20														
	M16	BS02058201645	45	72	27	10	30,0	31,7	36,5	32	–	2	2	0,30

Please check availability in current price and stock-list

EPB BD/5820-5821-5822 – Combimaster cylindrical extensions, steel, heavy metal or carbide

Cylindrical

Design 1 (5820)

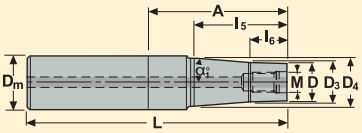

Design 2 (5821)

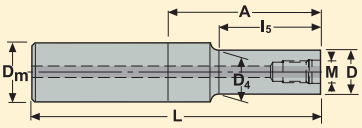

Design 3 (5822)

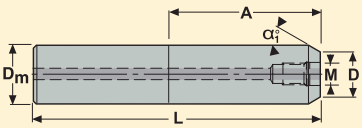

Cyl. Shank D_m	Connecting thread size	Part No.	Dimensions in mm A	L	l_5	l_6	D	D_3	D_4	α_1°	Design	Balan-cing	KG
12													
	M6	BD01258220660	60	105	–	–	11,0	–	–	–	3	2	0,10
	M6	BD01258220695E	95	140	–	–	11,0	–	–	–	3	2	0,30
14													
	M8	BD01458220860	60	105	–	–	13,5	–	–	–	3	2	0,20
	M8	BD01458220895E	95	140	–	–	13,5	–	–	–	3	2	0,80
16													
	M8	BD01658220865	65	113	–	–	13,5	–	–	–	3	2	0,20
	M8	BD016582208105E	105	153	–	–	13,5	–	–	–	3	2	0,40
	M8	BD016582108105E	105	153	50	–	13,5	–	14,5	–	2	2	0,40
18													
	M10	BD01858221070	70	118	–	–	18,0	–	–	–	3	2	0,30
	M10	BD018582210125E	125	173	–	–	18,0	–	–	–	3	2	0,80
20													
	M10	BD02058221075	75	125	–	–	18,5	–	–	–	3	2	0,30
	M10	BD02058211040D	40	90	25	–	18,5	–	18,5	–	2	2	0,50
	M10	BD020582110110	110	160	65	–	18,5	–	18,5	–	2	2	0,40
	M10	BD020582110110D	110	160	65	–	18,5	–	18,5	–	2	2	0,80
25													
	M12	BD02558221280	80	136	–	–	23,0	–	–	–	3	2	0,50
	M12	BD025582112185E	185	241	85	–	23,0	–	23,5	–	2	2	1,60
	M12	BD025582112185	185	241	85	–	23,0	–	23,5	–	2	2	0,90
	M12	BD025582112185D	185	241	85	–	23,0	–	23,0	–	2	2	1,70
32													
	M12	BD032582012100	100	160	65	25	23,0	24,7	31,0	4,5	1	2	0,90
	M12	BD032582012240	240	300	145	30	23,0	24,7	31,0	1,6	1	2	1,40
	M16	BD03258221695	95	155	–	–	30,0	–	–	–	3	2	0,90
	M16	BD032582116100	100	160	65	–	30,0	–	30,0	–	2	2	0,90
	M16	BD032582116100D	100	160	65	–	30,0	–	30,0	–	2	2	2,00
	M16	BD032582116145D	145	205	110	–	30,0	–	30,0	–	2	2	2,60
	M16	BD032582116240	240	300	145	–	30,0	–	30,0	–	2	2	1,70
	M16	BD032582116240D	240	300	145	–	30,0	–	30,0	–	2	2	3,80
40													
	M16	BD04058201690	90	160	65	25	30,0	31,7	39,0	5,2	1	2	1,40
	M16	BD040582016135	135	205	110	35	30,0	31,7	39,0	2,8	1	2	1,70
	M16	BD040582016230	230	300	145	35	30,0	31,7	39,0	1,9	1	2	2,50

Please check availability in current price and stock-list

D = heavy metal, E = carbide

EPB 5821 – Weldon to Combimaster® holders

DIN 1835-1 Form B

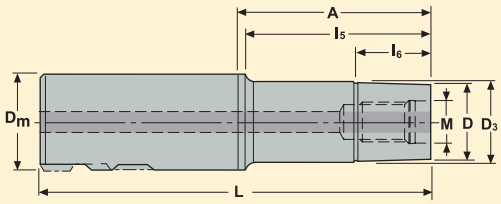

Machine side Weldon shank D_m	Workpiece side Combimaster size	Part No.	Dimensions in mm A	L	l_5	l_6	D	D_3	Balancing	KG
20										
	M10	BW02058211030	30	80	25	10	18,5	18,5	2	0,20
	M10	BW020582110102	102	152	97	20	18,5	18,5	2	0,40
25										
	M12	BW02558211245	45	101	40	20	23,0	23,5	2	0,40
	M12	BW025582112115	115	171	110	30	23,0	23,5	2	0,60
32										
	M16	BW03258211645	45	105	40	20	30,0	30,5	2	0,60
40										
	M20	BW040582120102	102	172	97	30	36,5	37,0	2	1,50

Please check availability in current price and stock-list

EPB BM/5820 – Combimaster Graflex® adapters

Graflex®

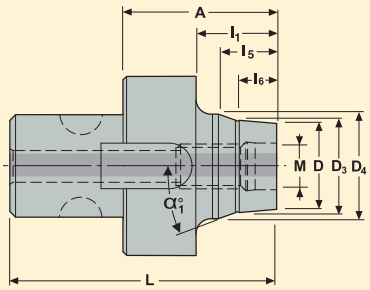

Graflex shank size	Connecting thread size	Part No.	Dimensions in mm								α_1°	Balan-cing	KG
			A	L	l_1	l_5	l_6	D	D_3	D_4			
G5													
	M16	BM05058201640	40	70	20	15	10	30	31,7	35	18,25	2	0,60

Please check availability in current price and stock-list

EPB 5820 – Seco-Capto™ to Combimaster® holders

Seco-Capto™/ ISO 26623-1

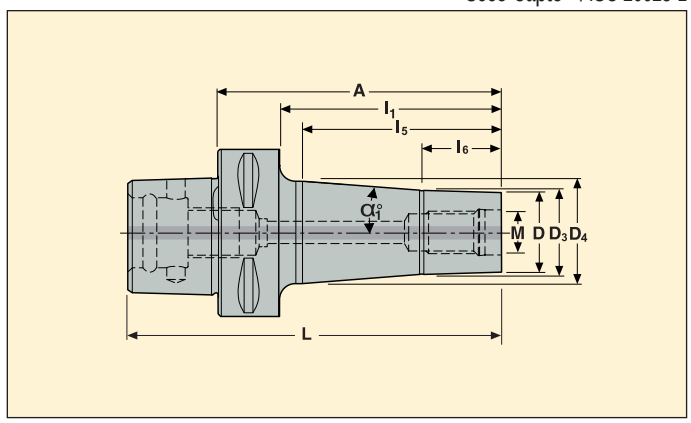

Machine side Taper Seco-Capto™	Workpiece side Combimaster size	Part No.	Dimensions in mm A	D	D_3	D_4	L	l_1	l_5	l_6	α_1°	Balancing	KG
C3													
	M6	C3-391.5820-06030	30	11,0	11,7	13,5	49	12	10	5	10,2	1	0,14
	M8	C3-391.5820-08030	30	13,5	15,7	17,5	49	12	10	5	10,2	1	0,14
	M10	C3-391.5820-10030	30	18,5	19,7	22,0	49	12	10	5	13,2	1	0,15
	M12	C3-391.5820-12035	35	23,0	24,7	28,0	54	17	15	10	18,3	1	0,18
	M16	C3-391.5820-16040	40	30,0	31,7	32,0	59	–	–	10	0,9	1	0,23
C4													
	M6	C4-391.5820-06030	30	11,0	11,7	11,7	54	7	5	5	–	1	0,29
	M8	C4-391.5820-08030	30	13,5	15,7	15,7	54	7	5	5	–	1	0,26
	M10	C4-391.5820-10035	35	18,5	19,7	22,0	59	12	10	5	13,0	1	0,28
	M12	C4-391.5820-12040	40	23,0	24,7	28,0	64	17	15	10	18,3	1	0,33
	M16	C4-391.5820-16045	45	30,0	31,7	35,5	69	22	21	10	10,8	1	0,38
C5													
	M6	C5-391.5820-06050	50	11,0	11,7	14,5	80	27	25	10	5,3	1	0,49
	M8	C5-391.5820-08050	50	13,5	15,7	18,5	80	27	25	10	5,3	1	0,47
	M10	C5-391.5820-10050	50	18,5	19,7	23,0	80	27	25	10	6,3	1	0,52
	M12	C5-391.5820-12050	50	23,0	24,7	28,5	80	27	25	10	7,2	1	0,56
	M16	C5-391.5820-16075	75	30,0	31,7	37,0	105	52	50	20	5,0	1	0,75
	M20	C5-391.5820-20075	75	36,5	37,5	43,0	105	52	50	20	5,3	1	0,90
C6													
	M6	C6-391.5820-06050	50	11,0	11,7	14,0	88	25	20	10	6,6	1	0,84
	M8	C6-391.5820-08075	75	13,5	15,7	20,0	113	50	45	15	4,1	1	0,89
	M10	C6-391.5820-10075	75	18,5	19,7	24,0	113	50	45	15	4,1	1	0,93
	M12	C6-391.5820-12050	50	23,0	24,7	28,0	88	25	20	10	9,4	1	0,85
	M12	C6-391.5820-12075	75	23,0	24,7	29,5	113	50	45	20	5,5	1	0,99
	M16	C6-391.5820-16050	50	30,0	31,7	35,5	88	25	20	10	10,8	1	0,90
	M16	C6-391.5820-16075	75	30,0	31,7	37,0	113	50	45	20	6,1	1	1,09
	M20	C6-391.5820-20075	75	36,5	37,5	42,5	113	50	45	20	5,8	1	1,20
C8													
	M12	C8-391.5820-12085	85	23,0	24,7	35,0	133	52	50	20	9,7	1	2,04
	M16	C8-391.5820-16085	85	30,0	31,7	42,5	133	52	50	20	10,2	1	2,16

Please check availability in current price and stock-list

ABEX26

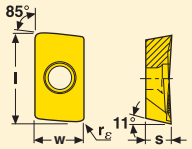

Size	Dimensions in mm W	l	s
ABEX26..	14	25,56	6,35
ABEX26..ZZFR	14,0	26,4	6,35

M15

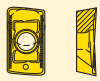

Part No.	r_ε	Cutting rake	Grades																		
			Coated													Uncoated			Cermet		
			MP1500	MP2500	MP3000	MH1000	MM4500	MK1500	MK2050	MS2050	MS2500	T350M	F15M	F25M	F40M	HX	H15	H25	MP1020		
ABEX 2606ZFFR-M15	1,6	17 °	■	■			■	■				■			■						
2606ZZFR-M15	1,6	17 °										■									

■ Stock standard
Subject to change refer to current price- and stock-list

AC..15

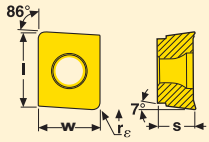

Size	Dimensions in mm W	l	s
AC..1506	12,7	15	6,35
	12,673	15,249	6,35

M11/M14/MD15

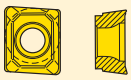

ME10

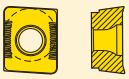

Part No.	r_ε	Cutting rake	Grades																		
			Coated													Uncoated			Cermet		
			MP1500	MP2500	MP3000	MH1000	MM4500	MK1500	MK2050	MS2050	MS2500	T350M	F15M	F25M	F40M	HX	H15	H25	MP1020		
ACET 150612TR-ME10	1,2	22 °								■					■						
ACET 150612R-M10	1,191	20,0 °								■					■						
150624R-M10	2,381	20,0 °								■					■						
150631R-M10	3,1	20,0 °								■					■						
150640R-M10	3,969	20,0 °								■					■						
150650R-M10	5,0	20,0 °								■					■						
150660R-M10	6,0	20,0 °								■					■						
ACET 150612TL-M11	1,2	14 °		■											■						
150612TR-M11	1,2	14 °	■	■				■		■		■		■	■						
150631TR-M11	3,1	14 °													■						
ACET 150612TL-M14	1,2	15 °													■						
150612TR-M14	1,2	15 °		■				■		■		■			■	■					
150630TR-M14	3,0	15 °										■									
150631TR-M14	3,1	15 °													■						
150660TL-M14	6,0	15 °													■						
150660TR-M14	6,0	15 °										■			■						
ACET 150612TR-MD15	1,2	15 °	■		■							■									
150630TR-MD15	3,0	15 °	■																		
ACMT 150612TR-M14	1,2	15 °		■								■			■						

■ Stock standard
Subject to change refer to current price- and stock-list

CCMX

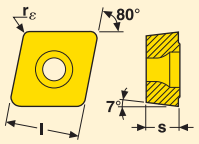

Size	Dimensions in mm l	s
06	6,35	3,5
06	6,35	2,38
08	8,03	4,4
08	7,94	3,18
09	9,525	3,97
12	12,7	4,76

E06/E07/ME09/ME11

M07/M08

MD06/MD07/MD09/MD11

Part No.	r_ε	Cutting rake	Grades: Coated													Uncoated			Cermet		
			MP1500	MP2500	MP3000	MH1000	MM4500	MK1500	MK2050	MS2050	MS2500	T350M	F15M	F25M	F40M	HX	H15	H25	MP1020		
CCMX 060304-E06	0,4	15 °													■	■					
CCMX 060204T-MD06	0,4	0 °													■						
CCMX 08T308-E07	0,8	15 °										■			■	■					
08T308T-M08	0,8	15 °										■			■						
080308T-MD07	0,8	0 °													■						
CCMX 09T308T-MD09	0,8	0 °													■						
CCMX 120412T-MD11	1,2	0 °													■						

■ Stock standard
Subject to change refer to current price- and stock-list

HPMR/N

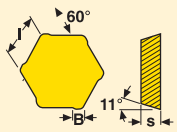

Size	Dimensions in mm l	s
12	12,5	6,35

ME15/M17/MD20/D25

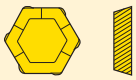

Part No.	B	Cutting rake	Grades																		
			Coated													Uncoated			Cermet		
			MP1500	MP2500	MP3000	MH1000	MM4500	MK1500	MK2050	MS2050	MS2500	T350M	F15M	F25M	F40M	HX	H15	H25	MP1020		
HPMR 1206ZETR-ME15	0,8	26 °													■						
1206ZETR-M17	0,8	17 °		■								■			■						
HPMN 1206ZETR-MD20	0,8	0 °		■				■	■												
1206ZETL-D25	0,8	0 °		■																	
1206ZETR-D25	0,8	0 °	■	■																	

■ Stock standard
Subject to change refer to current price- and stock-list

LNK.05

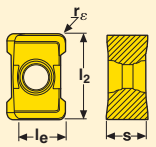

Size	Dimensions in mm l_e	l_2	s
05	5	10	4,7

E05/M06

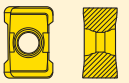

Part No.	r_ε	Cutting rake	Grades																		
			Coated													Uncoated			Cermet		
			MP1500	MP2500	MP3000	MH1000	MM4500	MK1500	MK2050	MS2050	MS2500	T350M	F15M	F25M	F40M	HX	H15	H25	MP1020		
LNKT 050404PPN4-E05	0,4	23 °													■			■			
LNKT 050404PPTN4-M06	0,4	15 °			■		■								■						
050408PPTN4-M06	0,8	15 °			■		■					■			■						
050416PPTN4-M06	1,6	15 °													■						
050420PPTN4-M06	2,0	15 °													■						
050424PPTN2-M06	2,4	15 °													■						
050431PPTL1-M06	3,1	15 °													■						
050431PPTR1-M06	3,1	15 °													■						

■ **Stock standard**
Subject to change refer to current price- and stock-list

Note: When using LNK insert with corner radius = 2,4, 3,1 and 4,0 mm please modify the external profile of the cutter by adding a corner radius or chamfer = 2,5 mm

LNK.06/08

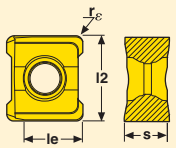

Size	Dimensions in mm l_e	l_2	s
06	6	10	5
08	7,5	10	5
080520	6,7	10	5
080516	7,2	10	5
080524	6,7	10	5

LNK.06

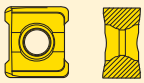

LNK.08

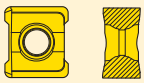

Part No.	r_ε	Cutting rake	Grades																		
			Coated													Uncoated			Cermet		
			MP1500	MP2500	MP3000	MH1000	MM4500	MK1500	MK2050	MS2050	MS2500	T350M	F15M	F25M	F40M	HX	H15	H25	MP1020		
LNKT 060504PPN-E05	0,4	23 °																■			
060508PPN-E05	0,8	23 °																■			
LNKT 060504PPTN-M06	0,4	15 °		■			■					■			■						
060508PPTN-M06	0,8	15 °		■	■		■	■	■			■			■						
060516PPTN-M06	1,6	15 °						■	■						■						
060531PPTN-M06	3,1	15 °													■						
060540PPTL-M06	4,0	15 °													■						
060540PPTR-M06	4,0	15 °													■						
LNKT 080504PPN-E05	0,4	23 °																■			
080508PPN-E05	0,8	23 °																■			
080520PPN-E05	2,0	23 °																■			
080531PPN-E05	3,1	23 °																■			
LNKT 080504PPTN-M06	0,4	15 °		■			■					■			■						
080508PPTN-M06	0,8	15 °		■	■		■	■	■			■			■						
080516PPTN-M06	1,6	15 °						■	■						■						
080520PPTN-M06	2,0	15 °						■	■						■						
080524PPTN-M06	2,4	15 °						■	■						■						
080531PPTN-M06	3,1	15 °						■	■						■						
080540PPTL-M06	4,0	15 °													■						
080540PPTR-M06	4,0	15 °													■						
LNKW 060504PPN-MD08	0,4	0 °							■												
060508PPN-MD08	0,8	0 °		■				■	■												
LNKW 080504PPN-MD08	0,4	0 °							■												
080508PPN-MD08	0,8	0 °		■				■	■												

■ **Stock standard**
Subject to change refer to current price- and stock-list

Note: When using LNK insert with corner radius = 2,4, 3,1 and 4,0 mm please modify the external profile of the cutter by adding a corner radius or chamfer = 2,5 mm

LNHQ14/17

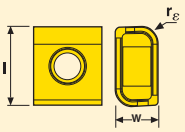

Size	Dimensions in mm l	Dimensions in mm w
14	14	7,5
17	17	7,5

M11/M13

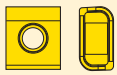

Part No.	r_ε	Cutting rake	Grades: Coated													Uncoated			Cermet		
			MP1500	MP2500	MP3000	MH1000	MM4500	MK1500	MK2050	MS2050	MS2500	T350M	F15M	F25M	F40M	HX	H15	H25	MP1020		
LNHQ 140708TN4-M11	0,8	16 °		■											■						
140731TN4-M11	3,1	16 °		■											■						
140740TN4-M11	4	16 °		■											■						
140750TN4-M11	5	16 °		■											■						
140760TN4-M11	6	16 °		■											■						
LNHQ 170708TN4-M13	0,8	16 °													■						
170731TN4-M13	3,1	16 °													■						
170740TN4-M13	4	16 °													■						
170750TN4-M13	5	16 °													■						
170760TN4-M13	6	16 °													■						

■ Stock standard
Subject to change refer to current price- and stock-list

LOEX08/12

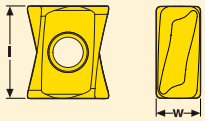

B = Wiper flat width

Size	Dimensions in mm W	l
LOEX0804..	4,4	8,25
LOEX12..-M12	7,5	12
LOEX12..-MD13	7,5	12

M08/MD08

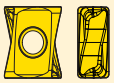

M12/MD13

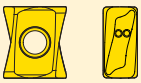

Part No.	r_ε	B	Cutting rake	Grades																			
				Coated													Uncoated				Cermet		
				MP1500	MP2500	MP3000	MH1000	MM4500	MK1500	MK2050	MS2050	MS2500	T350M	F15M	F25M	F40M	HX	HX	H15	H25	MP1020		
LOEX 080404TR-M08	0,4	1,29	34 °	■	■	■		■		■						■							
080408TR-M08	0,8	0,92	34 °	■	■	■		■	■	■	■		■			■							
080412TR-M08	1,2	0,52	34 °	■	■	■		■	■	■						■							
080416TR-M08	1,6	0,13	34 °	■	■	■		■	■	■						■							
LOEX 080404TR-MD08	0,4	1,29	29 °		■				■	■						■							
080408TR-MD08	0,8	0,92	29,53 °	■	■				■	■			■			■							
080412TR-MD08	1,2	0,52	29,53 °		■				■	■			■			■							
080416TR-MD08	1,6	0,13	29,53 °		■				■	■			■			■							
LOEX 120708TR-M12	0,8	2,47	34 °		■	■		■		■	■		■			■							
120712TR-M12	1,2	2,1	34 °					■					■			■							
120716TR-M12	1,6	1,74	34 °							■						■							
120720TR-M12	2,0	1,37	34 °		■	■		■					■			■							
120724TR-M12	2,4	1,01	34 °								■					■							
120731TR-M12	3,1	0,37	34 °		■	■		■			■		■			■							
LOEX 120708TR-MD13	0,8	2,47	29 °	■	■			■	■	■			■			■							
120712TR-MD13	1,2	2,1	29 °	■	■				■	■			■			■							
120716TR-MD13	1,6	1,74	29 °	■	■				■	■			■			■							

■ Stock standard
Subject to change refer to current price- and stock-list

LOH.06

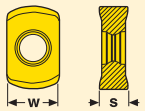

Size	Dimensions in mm W	s
0603	6,35	3,57
0603	6,35	3,56
0603	6,35	3,45

M07
D07
MD07
ME06

Part No.	Cutting rake	Grades																		
		Coated													Uncoated			Cermet		
		MP1500	MP2500	MP3000	MH1000	MM4500	MK1500	MK2050	MS2050	MS2500	T350M	F15M	F25M	F40M	HX	H15	H25	MP1020		
LOHT 060310TR-M07	20 °		■	■					■	■	■			■						
060310TR-MD07	7 °	■	■	■				■												
060310TR-ME06	27 °					■			■	■	■			■						
LOHW 060310TR-D07	0 °	■		■	■					■										

■ Stock standard
Subject to change refer to current price- and stock-list

LPH.05/06

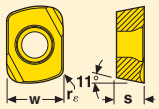

Size	Dimensions in mm W	s
05T2	5,07	2,54
0603	6,35	3,18

E05/ME04/ME05/M05/M06

MD05/MD07/D06

Part No.	r_ε	Cutting rake	Grades																		
			Coated													Uncoated			Cermet		
			MP1500	MP2500	MP3000	MH1000	MM4500	MK1500	MK2050	MS2050	MS2500	T350M	F15M	F25M	F40M	HX	H15	H25	MP1020		
LPHT 05T210TR-ME04	1,0	16,0 °					■			■		■			■						
LPKT 05T210TR-M05	1,0	11,0 °		■	■					■	■				■						
LPHW 05T210TR-MD05	1,0	0,0 °				■															
LPKW 05T210TR-MD05	1,0	0,0 °		■	■																
LPHT 060310ER-E05	1	16 °					■								■			■			
060310TR-ME05	1	16 °			■		■			■					■						
060310TR-M06	1	11 °		■	■					■	■	■			■						
LPHW 060310TR-MD07	1	0 °		■							■										
060310TR-D06	1	0 °			■	■															

■ Stock standard
Subject to change refer to current price- and stock-list

OFEX/OFMT05

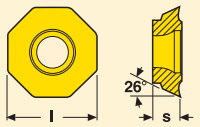

Size	Dimensions in mm l	s
OF.. 05T3	12,7	3,77
OF..05	13,3	4,76

E04/M05

M08/M14

ME07ME12//D09

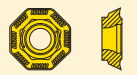

Part No.	Cutting rake	Grades																		
		Coated													Uncoated			Cermet		
		MP1500	MP2500	MP3000	MH1000	MM4500	MK1500	MK2050	MS2050	MS2500	T350M	F15M	F25M	F40M	HX	H15	H25	MP1020		
OFEX 05T305N-E04	20 °											■				■				
05T305TN-ME07	18 °		■								■			■						
05T305N-M05	0 °																			
05T305TN-M08	0 °		■				■				■			■				■		
05T305TN-D09	0 °	■																		
OFMT 050405TR-ME12	18 °		■			■					■			■						
050405TR-M14	0 °		■				■				■			■						

■ Stock standard
Subject to change refer to current price- and stock-list

OFER/OFEN/OFMR07

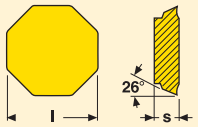

Size	Dimensions in mm l	s
OFER 07	17,94	4,56
OFMR 07	18,02	4,86
OFEN 07	17,96	4,76
OFEN 07	18,02	4,76
OFEN 07 ZZ	18,11	4,74

E07/M10/D18/M16

ME10/ME13/ME15/M15

ZZ..M10/M16

Part No.	Cutting rake	Grades: Coated													Uncoated			Cermet		
		MP1500	MP2500	MP3000	MH1000	MM4500	MK1500	MK2050	MS2050	MS2500	T350M	F15M	F25M	F40M	HX	H15	H25	MP1020		
OFER 070405N-E07	20 °											■				■				
070405TN-ME10	18 °		■							■				■						
070405TN-ME15	18 °		■			■					■			■				■		
070405N-M10	0 °			■																
070405TN-M16	0 °	■	■			■	■	■			■			■				■		
OFMR 070405TR-ME13	15 °		■								■			■						
070405TR-M15	6 °		■				■				■			■						
OFEN 070405TN-D18	0 °	■	■	■		■	■	■										■		
0704ZZR-M10	0 °			■																
0704ZZTR-M16	0 °						■				■							■		
0704ZZTL-M16	0 °						■													

■ Stock standard
Subject to change refer to current price- and stock-list

OF..07

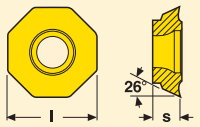

Size	Dimensions in mm l	s
OFMT 07	17,97	4,86
OFET 07	17,94	4,76
OFET 07	17,94	4,56

ME13/ME09/M13/M15/D18

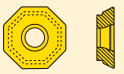

ME10/ME15/M16

Part No.	Cutting rake	Grades																		
		Coated													Uncoated			Cermet		
		MP1500	MP2500	MP3000	MH1000	MM4500	MK1500	MK2050	MS2050	MS2500	T350M	F15M	F25M	F40M	HX	H15	H25	MP1020		
OFMT 070405TN-ME13	18 °		■			■								■						
070405TN-M15	0 °		■											■						
070405TR-ME13	18 °										■									
070405TR-M15	0 °													■						
OFEW 070405TN-D18	0 °	■																		
OFET 070405TN-M16	0 °						■													
070405TN-ME10	18 °													■						
070405TN-ME15	18 °					■								■						

■ Stock standard
Subject to change refer to current price- and stock-list

ON.U05/09

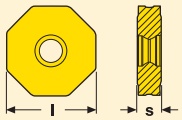

Size	Dimensions in mm l	s
ON..05	12	4
ON..09	22	5,8

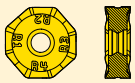

MD16/MD17

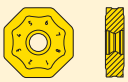

ME10-13/M10-15

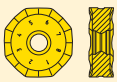

ZZTN4-M10/M14

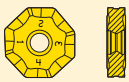

Part No.	Cutting rake	Grades																		
		Coated													Uncoated			Cermet		
		MP1500	MP2500	MP3000	MH1000	MM4500	MK1500	MK2050	MS2050	MS2500	T350M	F15M	F25M	F40M	HX	H15	H25	MP1020		
ONMU 050410ANTN-M10	20 °	■	■	■		■	■	■			■			■				■		
050410ANTN-M11	20 °	■	■	■		■	■	■			■			■				■		
050410ANTN-ME10	20 °	■	■	■		■	■		■					■						
050410ANTN-ME11	20 °	■	■	■		■	■		■					■						
ONEU 050410ZZTN4-M10	20 °		■	■		■	■	■			■			■				■		
ONMU 090520ANTN-ME12	20 °	■	■	■		■	■		■	■	■			■						
090520ANTN-ME13	20 °	■	■	■		■	■	■	■	■	■			■						
090520ANTN-M12	20 °	■	■			■	■	■		■	■			■						
090520ANTN-M13	20 °	■	■	■		■	■	■		■	■			■				■		
090520ANTN-M14	15 °	■	■	■			■	■			■			■						
090520ANTN-M15	15 °	■	■	■			■	■			■			■						
090520ANTN-MD16	0 °	■	■				■				■									
090520ANTN-MD17	0 °	■	■				■													
ONEU 090520ZZTN4-M12	20 °	■	■					■												
ONEU 090520ZZTN4-M14	15 °	■	■	■		■	■	■			■			■				■		

■ Stock standard
Subject to change refer to current price- and stock-list

RD..05/06/07/08/10

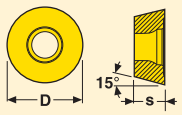

Size	Dimensions in mm D	s
0501	5	1,51
06T1	6	2,18
0702	7	2,38
0803	8	3,18
10T3	10	3,97

RDHT-Exx

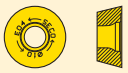

RDHT-Mxx

RDHW-MDxx

RDKW-MDxx

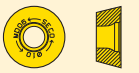

Part No.	Cutting rake	Grades: Coated													Uncoated			Cermet		
		MP1500	MP2500	MP3000	MH1000	MM4500	MK1500	MK2050	MS2050	MS2500	T350M	F15M	F25M	F40M	HX	H15	H25	MP1020		
RDHT 06T1M0-E02	18 °													■			■			
0803M0-E03	20 °										■			■			■			
10T3M0-E04	20 °										■			■			■			
10T3M0T-M05	16 °		■			■			■	■	■			■						
10T3M0T-M07	11 °		■			■				■	■			■						
RDHW 0501M0-MD01	0 °			■										■						
06T1M0-MD02	0 °			■				■				■		■						
0702M0-MD03	0 °			■										■						
0702M0T-MD04	0 °							■				■								
0803M0-MD03	0 °			■					■					■						
10T3M0-MD04	0 °			■										■						
10T3M0T-MD06	0 °				■								■	■						
RDKW 0803M0T-MD05	0 °		■					■		■		■	■	■						
10T3M0T-MD06	0 °	■	■					■		■		■	■	■						

■ Stock standard
Subject to change refer to current price- and stock-list

RP..12

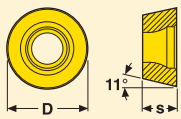

Size	Dimensions in mm D	s
1204	12,0	4,76

Part No.	Cutting rake	Grades																		
		Coated													Uncoated			Cermet		
		MP1500	MP2500	MP3000	MH1000	MM4500	MK1500	MK2050	MS2050	MS2500	T350M	F15M	F25M	F40M	HX	H15	H25	MP1020		
RPHT 1204M0T-4-M08	16 °									■	■			■						
1204M0T-4-M13	16 °								■	■	■									
RPHT 1204M0-6-E05	20 °								■		■			■			■			
1204M0T-6-ME07	20 °					■			■		■			■						
1204M0T-6-M08	16 °		■			■			■	■	■			■						
1204M0T-6-M13	16 °		■						■	■	■			■						
RPKT 1204M0T-6-M15	15 °	■	■					■		■	■			■						
RPKW 1204M0T-6-MD10	0 °	■	■	■				■												
RPHW 1204M0T-6-MD12	0 °				■															
1204M0-6-MD05	0 °			■	■				■					■						

■ Stock standard
Subject to change refer to current price- and stock-list

RP..16/20

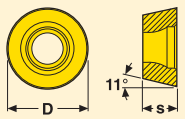

Size	Dimensions in mm D	s
1605	16	5,56
2006	20	6,35

Part No.	Cutting rake	Grades																		
		Coated													Uncoated			Cermet		
		MP1500	MP2500	MP3000	MH1000	MM4500	MK1500	MK2050	MS2050	MS2500	T350M	F15M	F25M	F40M	HX	H15	H25	MP1020		
RPHT 1605M0T-ME11	21 °					■			■	■	■			■						
1605M0T-M12	15 °		■			■			■	■	■			■						
1605M0T-M18	15 °	■	■					■		■	■		■	■						
RPKT 1605M0T-ME11	21 °													■						
RPKW 1605M0T-MD20	0 °	■						■		■		■	■							
RPHW 1605M0T-MD08	0 °													■						
RPHT 2006M0T-ME12	20 °		■			■			■	■	■			■						
RPKT 2006M0T-M15	15 °		■							■	■			■						
2006M0T-M20	15 °	■	■					■		■	■		■	■						
RPKW 2006M0-MD10	0 °													■						
2006M0T-MD22	0 °	■						■		■		■	■							

■ Stock standard
Subject to change refer to current price- and stock-list

SC..12

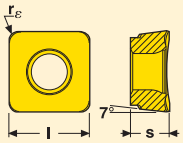

Size	Dimensions in mm	
	l	s
SC..1206	12,7	6,35

ME10

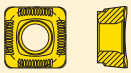

M11/M14/MD15/MD16

Part No.	r_ε	Cutting rake	Grades																		
			Coated													Uncoated			Cermet		
			MP1500	MP2500	MP3000	MH1000	MM4500	MK1500	MK2050	MS2050	MS2500	T350M	F15M	F25M	F40M	HX	H15	H25	MP1020		
SCET 120612T-ME10	1,2	22 °								■					■						
120612T-M11	1,2	14 °	■	■				■		■		■			■						
120612T-M14	1,2	15 °		■				■		■		■			■	■					
120612T-MD15	1,2	15 °	■		■							■									
120630T-M14	3,0	15 °		■	■				■	■	■	■			■						
120630T-MD16	3,0	15 °	■	■							■	■			■						
120631T-ME10	3,1	22 °																			
120631T-M11	3,1	14 °																			
SCEX 120660T-M14	6,0	15 °										■									
SCMT 120612T-M14	1,2	15 °										■			■						
SCET 120612R-M10	1,2	20 °								■					■						

■ Stock standard
Subject to change refer to current price- and stock-list

SEAN12

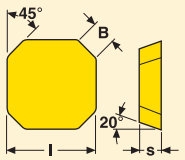

Size	Dimensions in mm	
	l	s
SEAN 12	12,7	3,18
SEAN 13	13,44	3,36
SEAN 16	16,8	4,79

E12/M14/M15/M18/M19MD15

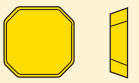

Part No.	B	Cutting rake	Grades																		
			Coated													Uncoated			Cermet		
			MP1500	MP2500	MP3000	MH1000	MM4500	MK1500	MK2050	MS2050	MS2500	T350M	F15M	F25M	F40M	HX	H15	H25	MP1020		
SEAN 1203AFN-E12	1,5	0 °											■			■					
1203AFTN-M14	1,5	0 °										■				■			■		
1203AFTN-MD15	1,5	0 °																	■		
SEAN 1303AFN-E12	3,5	0 °														■					
1303AFTN-M14	3,5	0 °										■									
1303AFTN-M15	3,5	0 °						■													
1303AFTN-MD15	3,5	0 °																	■		
SEAN 1604AFN-E15	3,5	0 °														■					
1604AFTN-M18	4,1	0 °										■									
1604AFTN-M19	4,1	0 °						■													

■ Stock standard
Subject to change refer to current price- and stock-list

SEAN12

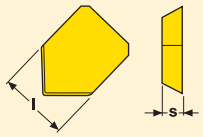

Size	Dimensions in mm	
	l	s
SEAN 12 ZZ	12,7	3,18
SEAN 15 ZZ	15,87	4,76

M15/M18/MD15

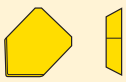

Part No.	B	Cutting rake	Grades																		
			Coated													Uncoated			Cermet		
			MP1500	MP2500	MP3000	MH1000	MM4500	MK1500	MK2050	MS2050	MS2500	T350M	F15M	F25M	F40M	HX	H15	H25	MP1020		
SEAN 1203ZZTN-M15	7,3	0 °						■													
1203ZZTN-MD15	7,3	0 °	■																■		
SEAN 1504ZZTN-M18	9,3	0 °						■													

■ Stock standard
Subject to change refer to current price- and stock-list

SEE.09

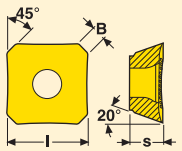

Size	Dimensions in mm l	s
SE..09T3	9,52	3,97

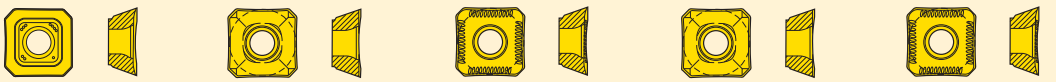

Part No.	B	Cutting rake	Grades																		
			Coated													Uncoated			Cermet		
			MP1500	MP2500	MP3000	MH1000	MM4500	MK1500	MK2050	MS2050	MS2500	T350M	F15M	F25M	F40M	HX	H15	H25	MP1020		
SEEX 09T3AFTN-M08	1,5	0 °						■	■			■			■				■		
09T3AFN-E04	1,5	25 °											■		■		■				
09T3AFN-M05	1,5	0 °			■					■					■						
09T3AFTN-D09	1,5	0 °	■																		
09T3AFTN-ME07	1,5	22 °		■			■					■			■						
SEMX 09T3AFTN-ME06	1,5	25 °		■								■			■						
09T3AFTN-M08	1,5	0 °		■			■					■			■						

■ Stock standard
Subject to change refer to current price- and stock-list

SEE.12

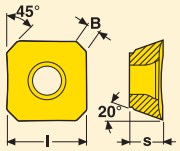

Size	Dimensions in mm l	s
SEEX 1204	12,7	4,76
SEMX 1204	12,7	4,76

E08/MD18MD19

ME11/ME12/M10/M14/M15

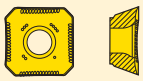

Part No.	B	Cutting rake	Grades																		
			Coated													Uncoated			Cermet		
			MP1500	MP2500	MP3000	MH1000	MM4500	MK1500	MK2050	MS2050	MS2500	T350M	F15M	F25M	F40M	HX	H15	H25	MP1020		
SEEX 1204AFN-E08	1,5	25 °													■			■			
1204AFTN-ME11	1,5	18 °		■			■					■			■						
1204AFN-M10	1,5	7 °		■	■		■			■		■			■						
1204AFTN-M14	1,5	7 °	■	■			■	■	■			■			■				■		
1204ZZTN-M14	7,4	0 °	■	■				■				■			■				■		
1204AFTN-MD18	1,5	0 °	■		■			■				■			■				■		
SEMX 1204AFTN-ME12	1,5	18 °		■			■					■			■						
1204AFTN-M15	1,5	7 °	■	■			■	■	■			■			■						
1204AFTN-MD19	1,5	0 °	■		■			■				■									

■ Stock standard
Subject to change refer to current price- and stock-list

SEE.15

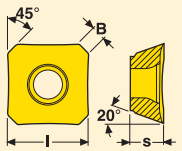

Size	Dimensions in mm l	s
SEEX 1505	15,87	5,56
SEMX 1505	15,87	5,56

E10

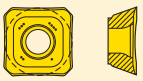

M12/M17MD20

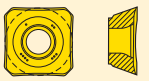

ME15

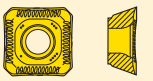

Part No.	B	Cutting rake	Grades																		
			Coated													Uncoated			Cermet		
			MP1500	MP2500	MP3000	MH1000	MM4500	MK1500	MK2050	MS2050	MS2500	T350M	F15M	F25M	F40M	HX	H15	H25	MP1020		
SEEX 1505AFN-E10	1,8	25 °																■			
1505AFN-M12	1,8	5 °		■						■		■			■						
1505AFTN-M17	1,8	5 °	■	■				■	■			■			■						
1505ZZTN-M17	9,4	5 °		■				■				■									
SEMX 1505AFTN-ME15	1,8	21 °										■			■						
1505AFTN-M18	1,8	5 °	■	■				■	■			■			■						
1505AFTN-MD20	1,8	0 °	■	■	■			■				■									

■ Stock standard
Subject to change refer to current price- and stock-list

SE..12/15

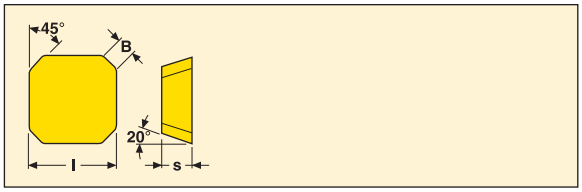

Size	Dimensions in mm l	s
SE..1203	12,7	3,18
SE..1204	15,87	4,76
SE..1504	15,87	4,76
12	12,77	3,18

E12/E10/E15/M14/M18/MD16/MD20/MD21/D16

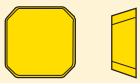

M13/MD14

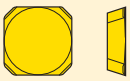

Part No.	B	Cutting rake	Grades: Coated													Uncoated			Cermet		
			MP1500	MP2500	MP3000	MH1000	MM4500	MK1500	MK2050	MS2050	MS2500	T350M	F15M	F25M	F40M	HX	H15	H25	MP1020		
SEKN 1203AFTN-E10	2,3	0 °																			
1203AFN-E12	1,6	0 °						■							■	■					
1203AFTN-M14	1,5	0 °	■	■			■	■	■			■			■				■		
1203AFTN-MD16	1,5	0 °																	■		
1203AFTN-D16	1,6	0 °	■																		
1204AFTN-M18	1,5	0 °						■				■									
SEKN 1504AFN-E15	1,9	0 °													■	■					
1504AFTN-M18	1,5	0 °		■			■	■	■			■			■						
1504AFTN-MD20	1,9	0 °	■																		
1504AFTN-MD21	1,5	0 °																	■		
SEEX 1203AFTN-M13	8	0 °										■									
1203AFTN-MD14	8	0 °				■		■					■				■				

■ Stock standard
Subject to change refer to current price- and stock-list

SEKR12/15/16

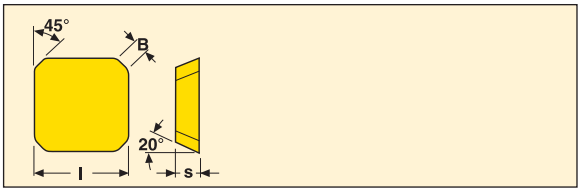

Size	Dimensions in mm l	s
12	12,7	3,18
12	12,7	4,76
13	13,44	3,36
15	15,87	4,76
16	16,8	4,79

E07

ME10/ME12/ME13/ME16

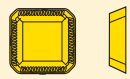

Part No.	B	Cutting rake	Grades																		
			Coated													Uncoated			Cermet		
			MP1500	MP2500	MP3000	MH1000	MM4500	MK1500	MK2050	MS2050	MS2500	T350M	F15M	F25M	F40M	HX	H15	H25	MP1020		
SEKR 1203AFN-E07	1,5	18 °													■	■					
1203AFTN-ME10	1,5	20 °										■			■	■					
1203AFTN-ME13	1,5	24 °	■	■								■			■	■					
1204AFTN-ME16	1,5	20 °																			
1303AFTN-ME13	3,5	24 °													■	■					
SEKR 1504AFTN-ME12	1,5	20 °										■									
1504AFTN-ME16	1,5	20 °					■					■									
1604AFTN-ME16	4,1	20 °										■									

SEKR..ZZ

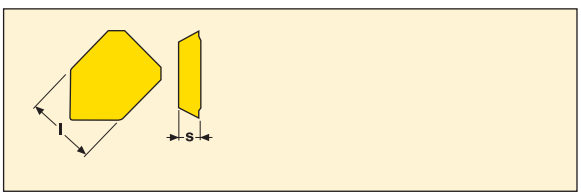

Size	Dimensions in mm l	s
SEKR 1203	12,7	3,175

E07

Part No.	Cutting rake	Grades																		
		Coated													Uncoated			Cermet		
		MP1500	MP2500	MP3000	MH1000	MM4500	MK1500	MK2050	MS2050	MS2500	T350M	F15M	F25M	F40M	HX	H15	H25	MP1020		
SEKR 1203ZZN-E07	18 °														■					

■ Stock standard
Subject to change refer to current price- and stock-list

SENN

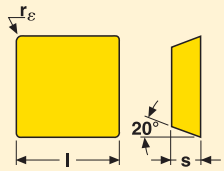

Size	Dimensions in mm l	s
12	12,7	3,175

E10/M12

Part No.	r_ε	Cutting rake	Grades: Coated													Uncoated			Cermet		
			MP1500	MP2500	MP3000	MH1000	MM4500	MK1500	MK2050	MS2050	MS2500	T350M	F15M	F25M	F40M	HX	H15	H25	MP1020		
SENN 120308-E10	0,8	0 °														■					
120308T-M12	0,8	0 °													■						

SNH.15

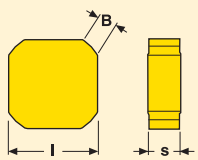

Size	Dimensions in mm l	s
15	15,87	4,76

M14

MD15

Part No.	B	Cutting rake	Grades: Coated													Uncoated			Cermet		
			MP1500	MP2500	MP3000	MH1000	MM4500	MK1500	MK2050	MS2050	MS2500	T350M	F15M	F25M	F40M	HX	H15	H25	MP1020		
SNHF 150412TN-M14	–	8 °	■					■													
150412TN-M14-H	–	8 °							■												
1504XNN-M14	1,37	15 °	■					■													
1504XNN-M14-H	1,37	15 °							■												
1504ZZN-M14	7	15 °						■													
SNHN 150412TN-MD15	–	0 °						■													
150412TN-MD15-H	–	0 °							■												
1504XNN-MD15	1,37	0 °						■													
1504XNN-MD15-H	1,37	0 °							■												

■ Stock standard

Subject to change refer to current price- and stock-list

SNHQ11

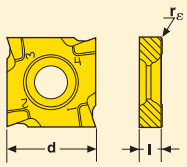

Size	Dimensions in mm d	l
1102	11	2,3
1103	11	2,7

E05/M07

Part No.	r_ε	Cutting rake	Grades																		
			Coated													Uncoated			Cermet		
			MP1500	MP2500	MP3000	MH1000	MM4500	MK1500	MK2050	MS2050	MS2500	T350M	F15M	F30M	F40M	HX	H15	H25	MP1020		
SNHQ 110202EL4-E05	0,2	20 °																■			
110202ER4-E05	0,2	20 °																■			
SNHQ 110202TL4-M07	0,2	20 °		■											■						
110202TR4-M07	0,2	20 °		■											■						
110204TL4-M07	0,4	20 °		■			■							■	■						
110204TR4-M07	0,4	20 °		■			■							■	■						
110208TL4-M07	0,8	20 °					■								■						
110208TR4-M07	0,8	20 °					■								■						
110212TL4-M07	1,2	20 °													■						
110212TR4-M07	1,2	20 °													■						
110216TL4-M07	1,6	20 °													■						
110216TR4-M07	1,6	20 °													■						
110220TL4-M07	2,0	20 °												■							
110220TR4-M07	2,0	20 °												■							
SNHQ 110302EL4-E05	0,2	20 °																■			
110302ER4-E05	0,2	20 °																■			
SNHQ 110302TL4-M07	0,2	20 °		■											■						
110302TR4-M07	0,2	20 °		■											■						
110304TL4-M07	0,4	20 °		■			■							■	■						
110304TR4-M07	0,4	20 °		■			■							■	■						
110308TL4-M07	0,8	20 °					■								■						
110308TR4-M07	0,8	20 °					■								■						
110312TL4-M07	1,2	20 °													■						
110312TR4-M07	1,2	20 °													■						
110316TL4-M07	1,6	20 °													■						
110316TR4-M07	1,6	20 °													■						
110320TL4-M07	2,0	20 °												■							
110320TR4-M07	2,0	20 °												■							

■ Stock standard
Subject to change refer to current price- and stock-list

SNHQ1203/1204

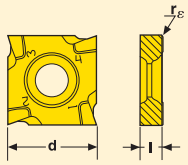

Size	Dimensions in mm d	l
1203	12,7	3,2
1204	12,7	4

EL/ER2-E05/M07

xL/xR4-E05/M07

Part No.	r_ε	Cutting rake	Grades																		
			Coated													Uncoated			Cermet		
			MP1500	MP2500	MP3000	MH1000	MM4500	MK1500	MK2050	MS2050	MS2500	T350M	F15M	F30M	F40M	HX	H15	H25	MP1020		
SNHQ 120302EL4-E05	0,2	20 °																■			
120302ER4-E05	0,2	20 °																■			
SNHQ 120302TL4-M07	0,2	20 °													■						
120302TR4-M07	0,2	20 °													■						
120304TL4-M07	0,4	20 °		■			■							■	■						
120304TR4-M07	0,4	20 °		■			■							■	■						
120308TL4-M07	0,8	20 °		■			■								■						
120308TR4-M07	0,8	20 °		■			■								■						
120310TL4-M07	1,0	20 °													■						
120310TR4-M07	1,0	20 °													■						
120312TL4-M07	1,2	20 °													■						
120312TR4-M07	1,2	20 °													■						
120316TL4-M07	1,6	20 °													■						
120316TR4-M07	1,6	20 °													■						
120320TL4-M07	2,0	20 °													■						
120320TR4-M07	2,0	20 °													■						
120324EL2-M07	2,4	20 °													■						
120324ER2-M07	2,4	20 °													■						
120330EL2-M07	3,0	20 °													■						
120330ER2-M07	3,0	20 °													■						
SNHQ 120404EL4-E05	0,4	20 °																■			
120404ER4-E05	0,4	20 °																■			
SNHQ 120402TL4-M07	0,2	20 °													■						
120402TR4-M07	0,2	20 °													■						
120404TL4-M07	0,4	20 °		■			■							■	■						
120404TR4-M07	0,4	20 °		■			■							■	■						
120408TL4-M07	0,8	20 °		■			■							■	■						
120408TR4-M07	0,8	20 °		■			■							■	■						
120412TL4-M07	1,2	20 °													■						
120412TR4-M07	1,2	20 °													■						
120416TL4-M07	1,6	20 °													■						
120416TR4-M07	1,6	20 °													■						
120420TL4-M07	2,0	20 °													■						
120420TR4-M07	2,0	20 °													■						
120424EL2-M07	2,4	20 °													■						
120424ER2-M07	2,4	20 °													■						
120431EL2-M07	3,1	20 °													■						
120431ER2-M07	3,1	20 °													■						
120435EL2-M07	3,5	20 °													■						
120435ER2-M07	3,5	20 °													■						

■ Stock standard
Subject to change refer to current price- and stock-list

SNHQ12045

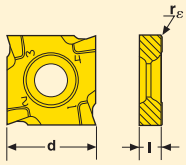

Size	Dimensions in mm d	l
12045	12,7	4,5

EL/ER2-M07

xL/xR4-E05/M07

Part No.	r_ε	Cutting rake	Grades																		
			Coated													Uncoated			Cermet		
			MP1500	MP2500	MP3000	MH1000	MM4500	MK1500	MK2050	MS2050	MS2500	T350M	F15M	F30M	F40M	HX	H15	H25	MP1020		
SNHQ 1204504EL4-E05	0,4	20 °																■			
1204504ER4-E05	0,4	20 °																■			
SNHQ 1204502TL4-M07	0,2	20 °													■						
1204502TR4-M07	0,2	20 °													■						
1204504TL4-M07	0,4	20 °		■			■							■	■						
1204504TR4-M07	0,4	20 °		■			■							■	■						
1204508TL4-M07	0,8	20 °		■			■								■						
1204508TR4-M07	0,8	20 °		■			■								■						
1204512TL4-M07	1,2	20 °													■						
1204512TR4-M07	1,2	20 °													■						
1204516TL4-M07	1,6	20 °													■						
1204516TR4-M07	1,6	20 °													■						
1204520TL4-M07	2,0	20 °													■						
1204520TR4-M07	2,0	20 °													■						
1204524EL2-M07	2,4	20 °													■						
1204524ER2-M07	2,4	20 °													■						
1204531EL2-M07	3,1	20 °													■						
1204531ER2-M07	3,1	20 °													■						
1204540EL2-M07	4,0	20 °													■						
1204540ER2-M07	4,0	20 °													■						

■ Stock standard
Subject to change refer to current price- and stock-list

SNHQ1205

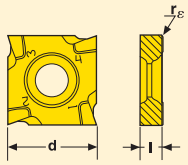

Size	Dimensions in mm d	l
1205	12,7	5,4

ER/EL2-M07

xL/xR4-E05/M07

Part No.	r_ε	Cutting rake	Grades																		
			Coated													Uncoated			Cermet		
			MP1500	MP2500	MP3000	MH1000	MM4500	MK1500	MK2050	MS2050	MS2500	T350M	F15M	F30M	F40M	HX	H15	H25	MP1020		
SNHQ 120504EL4-E05	0,4	20 °																■			
120504ER4-E05	0,4	20 °																■			
SNHQ 120502TL4-M07	0,2	20 °													■						
120502TR4-M07	0,2	20 °													■						
120504TL4-M07	0,4	20 °		■			■							■	■						
120504TR4-M07	0,4	20 °		■			■							■	■						
120508TL4-M07	0,8	20 °		■			■							■	■						
120508TR4-M07	0,8	20 °		■			■							■	■						
120510TL4-M07	1,0	20 °													■						
120510TR4-M07	1,0	20 °													■						
120512TL4-M07	1,2	20 °													■						
120512TR4-M07	1,2	20 °													■						
120516TL4-M07	1,6	20 °													■						
120516TR4-M07	1,6	20 °													■						
120520TL4-M07	2,0	20 °													■						
120520TR4-M07	2,0	20 °													■						
120524EL2-M07	2,4	20 °													■						
120524ER2-M07	2,4	20 °													■						
120531EL2-M07	3,1	20 °													■						
120531ER2-M07	3,1	20 °													■						
120540EL2-M07	4,0	20 °													■						
120540ER2-M07	4,0	20 °													■						
120550EL2-M07	5,0	20 °													■						
120550ER2-M07	5,0	20 °													■						

■ **Stock standard**
Subject to change refer to current price- and stock-list

Note: When using SNHQ insert with corner radius = 5 mm, please modify the external profile of the cutter by adding a corner radius or chamfer = 4 mm

SNHQ1207

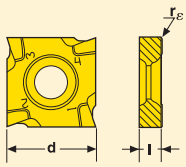

Size	Dimensions in mm d	l
1207	12,7	7

EL/ER2-M07

xL/xR4-E05/M07

Part No.	r_ε	Cutting rake	Grades																		
			Coated													Uncoated			Cermet		
			MP1500	MP2500	MP3000	MH1000	MM4500	MK1500	MK2050	MS2050	MS2500	T350M	F15M	F30M	F40M	HX	H15	H25	MP1020		
SNHQ 120704EL4-E05	0,4	20 °																■			
120704ER4-E05	0,4	20 °																■			
SNHQ 120704TL4-M07	0,4	20 °		■			■							■	■						
120704TR4-M07	0,4	20 °		■			■							■	■						
120708TL4-M07	0,8	20 °		■			■							■	■						
120708TR4-M07	0,8	20 °		■			■							■	■						
120712TL4-M07	1,2	20 °													■						
120712TR4-M07	1,2	20 °													■						
120716TL4-M07	1,6	20 °													■						
120716TR4-M07	1,6	20 °													■						
120720TL4-M07	2,0	20 °													■						
120720TR4-M07	2,0	20 °													■						
120724EL2-M07	2,4	20 °													■						
120724ER2-M07	2,4	20 °													■						
120731EL2-M07	3,1	20 °													■						
120731ER2-M07	3,1	20 °													■						
120740EL2-M07	4,0	20 °													■						
120740ER2-M07	4,0	20 °													■						
120750EL2-M07	5,0	20 °													■						
120750ER2-M07	5,0	20 °													■						
120760EL2-M07	6,0	20 °													■						
120760ER2-M07	6,0	20 °													■						

■ **Stock standard**
Subject to change refer to current price- and stock-list

Note: When using SNHQ insert with corner radius = 5 and 6 mm, please modify the external profile of the cutter by adding a corner radius or chamfer = 4 mm

SONX09/12

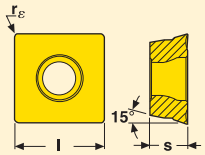

Size	Dimensions in mm	
	l	s
SO..09	9,55	3,97
SO..12	12,7	5,17

M10/M12/M14

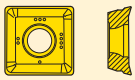

ME06/ME08

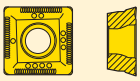

Part No.	r_ε	Cutting rake	Grades																		
			Coated													Uncoated			Cermet		
			MP1500	MP2500	MP3000	MH1000	MM4500	MK1500	MK2050	MS2050	MS2500	T350M	F15M	F25M	F40M	HX	H15	H25	MP1020		
SONX 09T304TR-ME06	0,4	22 °													■						
09T304TR-M10	0,4	19 °						■				■			■						
09T308TR-M10	0,8	19 °		■				■	■						■						
SONX 120508TR-ME08	0,8	24 °													■						
120508TR-M12	0,8	16 °	■	■				■	■			■			■						

■ Stock standard
Subject to change refer to current price- and stock-list

SPE.

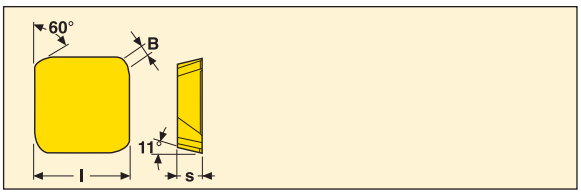

Size	Dimensions in mm	
	l	s
SPER 1904	19,05	4,763
SPER 1906	19,05	6,35
SPEN 1906	19,05	6,35
SPEN 2807	28,575	7,938

M17

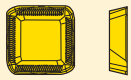

MD20/MD35/D25/D35

Part No.	B	Cutting rake	Grades																		
			Coated													Uncoated			Cermet		
			MP1500	MP2500	MP3000	MH1000	MM4500	MK1500	MK2050	MS2050	MS2500	T350M	F15M	F25M	F40M	HX	H15	H25	MP1020		
SPER 1904ZETR-M17	1,8	17 °																			
1906ZETR-M17	1,8	17 °					■					■									
SPEN 1906ZETL-MD20	1,8	0 °		■																	
1906ZETR-MD20	1,8	0 °		■				■				■									
1906ZETR-D25	1,8	0 °	■	■																	
SPEN 2807ZETR-MD35	8,5	0 °						■													
2807ZETR-D35	8,5	0 °	■																		

SPE.ZZ

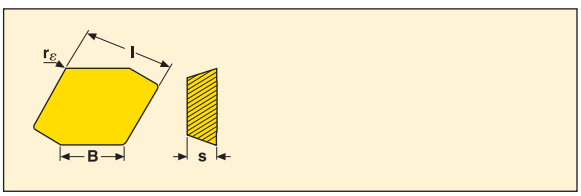

Size	Dimensions in mm	
	l	s
SPER 1906	20	6,35
SPER 1906	19,05	6,444
SPEN 1906	20	6,35
SPEN 2807	28,575	7,94

D35

M17/D25/MD20

Part No.	B	Cutting rake	Grades																		
			Coated													Uncoated			Cermet		
			MP1500	MP2500	MP3000	MH1000	MM4500	MK1500	MK2050	MS2050	MS2500	T350M	F15M	F25M	F40M	HX	H15	H25	MP1020		
SPER 1906ZZTR-M17	12	17 °		■																	
1906ZZTL-M17	12	17 °		■																	
SPEN 1906ZZTR-D25	12	0 °	■	■																	
1906ZZTR-MD20	12	0 °		■				■													
SPEN 2807ZZTR-D35	8,5	0 °	■																		

■ Stock standard
Subject to change refer to current price- and stock-list

SPMX

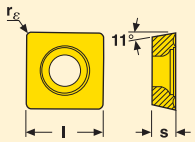

Size	Dimensions in mm	
	l	s
SPMX06..AP	6,35	2,38
SPMX07..AP	7,94	3,18
SPMX09..AP	9,525	3,18
SPMX12..AP	12,7	3,97
SPMX06..	6,35	2,38
SPMX07..	7,94	3,18
SPMX09..	9,525	3,18
SPMX12..	12,7	3,97

-75

AP-75

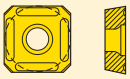

Part No.	B	Cutting rake	Grades																		
			Coated													Uncoated			Cermet		
			MP1500	MP2500	MP3000	MH1000	MM4500	MK1500	MK2050	MS2050	MS2500	T350M	F15M	F25M	F40M	HX	H15	H25	MP1020		
SPMX 0602AP-75	0,7														■	■					
0703AP-75	0,9														■						
0903AP-75	1,0											■			■	■					
12T3AP-75	1,4											■			■	■					
SPMX 060204-75	–	20 °													■						
070304-75	–	16 °													■						
090304-75	–	16 °													■						
12T308-75	–	14 °													■						

■ Stock standard
Subject to change refer to current price- and stock-list

SPMT

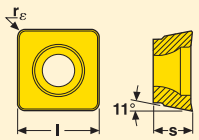

Size	Dimensions in mm	
	l	s
10	10	4,76

M08

Part No.	r_ε	Cutting rake	Grades																		
			Coated													Uncoated			Cermet		
			MP1500	MP2500	MP3000	MH1000	MM4500	MK1500	MK2050	MS2050	MS2500	T350M	F15M	F25M	F40M	HX	H15	H25	MP1020		
SPMT 100408T-M08	0,8	10 °													■						

■ Stock standard
Subject to change refer to current price- and stock-list

TNHF

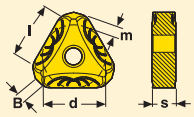

Size	Dimensions in mm			
	l	d	m	s
TNHF12	22,17	12,8	2,271	4,762

ME08

Part No.	B	Cutting rake	Grades																		
			Coated													Uncoated			Cermet		
			MP1500	MP2500	MP3000	MH1000	MM4500	MK1500	MK2050	MS2050	MS2500	T350M	F15M	F25M	F40M	HX	H15	H25	MP1020		
TNHF 1204ANN-ME08	1,4	15 °							■												

■ Stock standard
Subject to change refer to current price- and stock-list

VPGX

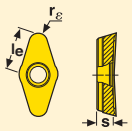

Size	Dimensions in mm l_e	s
220605	14,2	6,35
220608	14,2	6,35
220616	13,7	6,35
220620	14,2	6,35
220624	14,2	6,35
220631	14,2	6,35
220640	14,2	6,35
220663	11,8	6,35

E06/E10

Part No.	r_ε	Cutting rake	Grades: Coated													Uncoated			Cermet		
			MP1500	MP2500	MP3000	MH1000	MM4500	MK1500	MK2050	MS2050	MS2500	T350M	F15M	F25M	F40M	HX	H15	H25	MP1020		
VPGX 220605FR-E06	0,46	25 °															■				
220605ER-E10	0,46	25 °																■			
220608PDER-E10	0,85	25 °																■			
220616ER-E10	1,64	25 °																■			
220620ER-E10	2,05	25 °																■			
220624ER-E10	2,5	25 °																■			
220631EN-E10	3,18	25 °																■			
220631FN-E06	3,18	25 °															■				
220640ER-E10	4,12	25 °																■			
220663ER-E10	6,35	25 °																■			

■ Stock standard
Subject to change refer to current price- and stock-list

XNEX04/08

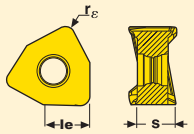

B = Wiper flat width

Size	Dimensions in mm l_e	s
XN..08	7,5	6,45
XN..08..TL	7,5	6,45
XN..08 ZZ	7,5	6,45
XNEX04-M06	4,0	3,31
XNEX04-M08	4,0	3,29

M06/M08

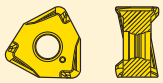

ME09/M08/M13/MD15

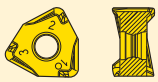

ZZR-M11

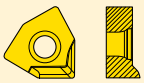

Part No.	r_ε	B	Cutting rake	Grades																		
				Coated													Uncoated			Cermet		
				MP1500	MP2500	MP3000	MH1000	MM4500	MK1500	MK2050	MS2050	MS2500	T350M	F15M	F25M	F40M	HX	H15	H25	MP1020		
XNEX 040304TR-M08	0,4	0,8	27 °	■	■	■		■	■	■						■						
040308TR-M08	0,8	0,4	27 °	■	■	■		■	■	■						■				■		
040304R-M06	0,4	0,8	32,6 °		■	■		■			■					■						
040308R-M06	0,8	0,4	32,6 °		■	■		■			■					■						
XNEX 080604TR-M13	0,4	1,8	22,57 °			■		■					■			■						
080604TR-ME09	0,4	1,8	27 °		■	■		■					■			■						
080608R-M08	0,8	1,4	24 °			■		■			■	■	■			■			■			
080608TR-M13	0,8	1,3	22 °	■	■	■			■	■			■			■						
080608TR-MD15	0,8	1,4	17 °	■	■	■			■	■			■			■						
080608TR-ME09	0,8	1,4	27 °	■	■	■		■	■	■			■			■						
080612TR-M13	1,2	0,9	22 °		■				■	■						■				■		
080612TR-MD15	1,2	1,0	17 °	■	■				■							■				■		
080612TR-ME09	1,2	1,0	27 °		■			■		■			■			■						
080616TR-M13	1,6	0,5	22 °	■	■	■			■	■			■			■						
080616TR-MD15	1,6	0,7	17 °	■	■	■			■	■			■			■						
080616TR-ME09	1,6	0,6	27 °		■	■		■		■			■			■						
XNEX 080608ZZR-M11	0,8	6	19 °			■			■							■						
XNEX 080608TL-M13	0,8	1,3	22 °		■											■						
080616TL-M13	1,6	0,5	22 °		■											■						

■ Stock standard
Subject to change refer to current price- and stock-list

XNHQ14/17

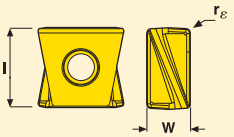

Size	Dimensions in mm W	l
09	5,5	9,3
12	6,5	11,7
14	7,5	14
14	7,5	14,0
17	7,5	17

E07/E09/E10/E12/M08/M10/M11/M13

Part No.	r_ε	Cutting rake	Grades																		
			Coated													Uncoated			Cermet		
			MP1500	MP2500	MP3000	MH1000	MM4500	MK1500	MK2050	MS2050	MS2500	T350M	F15M	F25M	F40M	HX	H15	H25	MP1020		
XNHQ 090508EN4-E07	0,8	21,0 °													■						
090504TN4-M08	0,4	16,0 °													■						
090508TN4-M08	0,8	16,0 °		■					■						■						
090512TN4-M08	1,2	16,0 °													■						
090516TN4-M08	1,6	16,0 °		■											■						
090520TN4-M08	2,0	16,0 °													■						
090524TN4-M08	2,4	16,0 °													■						
090531TN4-M08	3,1	16,0 °													■						
090540TN4-M08	4,0	16,0 °													■						
XNHQ 120608EN4-E09	0,8	21,0 °													■						
120608TN4-M10	0,8	16,0 °		■					■						■						
120612TN4-M10	1,2	16,0 °													■						
120616TN4-M10	1,6	16,0 °		■											■						
120620TN4-M10	2,0	16,0 °													■						
120624TN4-M10	2,4	16,0 °													■						
120631TN4-M10	3,1	16,0 °													■						
120640TN4-M10	4,0	16,0 °													■						
120650TN4-M10	5,0	16,0 °													■						
XNHQ 140708EN4-E10	0,8	22 °													■			■			
140708TN4-M11	0,8	16 °		■					■						■						
140716TN4-M11	1,6	16 °		■											■						
140720TN4-M11	2	16 °													■						
140724TN4-M11	2,4	16 °													■						
140731TN4-M11	3,1	16 °		■											■						
140740TN4-M11	4	16 °													■						
140750TN4-M11	5	16 °													■						
140760TN4-M11	6	16 °													■						
XNHQ 170708EN4-E12	0,8	16 °													■						
170708TN4-M13	0,8	16 °		■					■						■						
170716TN4-M13	1,6	16 °		■											■						
170720TN4-M13	2	16 °													■						
170724TN4-M13	2,4	16 °													■						
170731TN4-M13	3,1	16 °													■						
170740TN4-M13	4	16 °													■						
170750TN4-M13	5	16 °													■						
170760TN4-M13	6	16 °													■						

■ Stock standard
Subject to change refer to current price- and stock-list

XO.X06

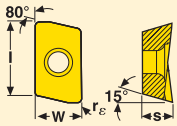

B = Wiper flat width

Size	Dimensions in mm W	l	s
XOEX06..	4,07	5,8	2,45
XOMX06..	4,06	5,8	2,45

E03

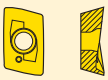

M05

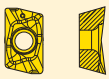

Part No.	r_ε	B	Cutting rake	Grades																			
				Coated													Uncoated				Cermet		
				MP1500	MP2500	MP3000	MH1000	MM4500	MK1500	MK2050	MS2050	MS2500	T350M	F15M	F25M	F40M	HX	HX	H15	H25	MP1020		
XOEX 060202FR-E03	0,2	1,1	29 °																■				
060204FR-E03	0,4	0,9	29 °													■			■		■		
XOMX 060202R-M05	0,2	1,1	20 °			■										■							
060204R-M05	0,4	0,9	20 °			■		■			■					■					■		
060208R-M05	0,8	0,5	20 °			■		■			■			■		■					■		
060216R-M05	1,6	0,6	20 °			■		■			■					■							

■ Stock standard
Subject to change refer to current price- and stock-list

XO.X10

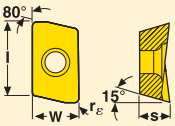

B = Wiper flat width

Size	Dimensions in mm W	l	s
XOEX10..	6,87	9,5	3,8
XOMX10..	6,86	9,5	3,83

Part No.	r_ε	B	Cutting rake	MP1500	MP2500	MP3000	MH1000	MM4500	MK1500	MK2050	MS2050	MS2500	T350M	F15M	F25M	F40M	HX	HX	H15	H25	MP1020		
				Grades																			
				Coated													Uncoated				Cermet		
XOEX 10T304FR-E05	0,4	1,3	21 °													■			■				
10T308FR-E05	0,8	1,3	21 °													■			■				
10T312FR-E05	1,2	1,3	21 °													■			■				
10T316FR-E05	1,6	1,0	21 °													■			■				
10T320FR-E05	2,0	0,6	21 °													■			■				
10T324FR-E05	2,4	0,3	21 °													■			■				
10T331FR-E05	3,1	0,3	21 °													■			■				
XOEX 10T304R-M06	0,4	1,3	15 °		■						■	■	■			■					■		
10T308R-M06	0,8	1,3	15 °		■			■			■	■	■			■					■		
10T312R-M06	1,2	1,3	15 °								■	■	■			■							
10T316R-M06	1,6	1,0	15 °								■	■	■			■							
10T320R-M06	2,0	0,6	15 °								■	■	■			■							
10T324R-M06	2,4	0,2	15 °								■	■	■			■							
10T331R-M06	3,1	0,4	15 °								■	■	■			■							
XOMX 10T304TR-ME07	0,4	1,3	22 °	■	■	■		■	■			■	■			■							
10T308TR-ME07	0,8	1,3	22 °	■	■	■		■	■			■	■			■							
10T312TR-ME07	1,2	1,3	20,0 °		■	■		■					■			■							
10T316TR-ME07	1,6	1,0	20,0 °		■	■		■					■			■							
10T320TR-ME07	2,0	0,6	20,0 °		■	■		■					■			■							
10T324TR-ME07	2,4	0,2	20,0 °		■								■			■							
10T331TR-ME07	3,1	0,4	20,0 °		■								■			■							
XOMX 10T304TR-M09	0,4	1,3	15 °	■	■	■		■	■	■		■	■			■					■		
10T308TR-M09	0,8	1,3	15 °	■	■	■		■	■	■		■	■			■					■		
10T312TR-M09	1,2	1,3	10,0 °					■		■			■			■							
10T316TR-M09	1,6	1,0	10,0 °					■					■			■							
10T320TR-M09	2,0	0,6	10,0 °					■					■			■							
10T324TR-M09	2,4	0,2	10,0 °										■			■							
10T331TR-M09	3,1	0,4	10,0 °										■			■							

■ Stock standard
Subject to change refer to current price- and stock-list

XO.X12

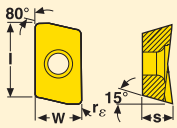

B = Wiper flat width

Size	Dimensions in mm W	l	s
XOEX12..	8,18	12,0	5,03
XOEX120463R-M07	8,24	12,0	5,03
XOEX120450R-M07	8,24	12,0	5,03
XOEX12..ZZR	8,18	12,0	5,03
XOMX12..	8,18	12,0	5,05

Part No.	r_ε	B	Cutting rake	Grades: Coated													Uncoated				Cermet		
				MP1500	MP2500	MP3000	MH1000	MM4500	MK1500	MK2050	MS2050	MS2500	T350M	F15M	F25M	F40M	HX	HX	H15	H25	MP1020		
XOEX 120404FR-E06	0,4	2,0	27 °											■		■			■				
120408FR-E06	0,8	1,6	27 °											■		■			■				
120420FR-E06	2,0	0,6	27 °											■		■							
120424FR-E06	2,4	0,6	24,0 °													■							
120416FR-E06	1,6	1,2	27 °											■		■							
120431FR-E06	3,1		27 °													■							
XOEX 120402R-M07	0,2	2,0	20 °													■							
120404R-M07	0,4	2,0	20 °		■						■					■					■		
120408R-M07	0,8	1,6	20 °		■	■		■			■	■	■			■					■		
120416R-M07	1,6	1,2	20 °			■		■			■					■							
120424R-M07	2,4	0,6	20 °								■					■							
120431R-M07	3,1		20 °					■			■	■	■			■							
120440R-M07	4,0		20 °								■					■							
120463R-M07	6,3		20 °								■					■							
120450R-M07	5,0		20 °								■					■							
120408ZZR-M07	0,8	6,6	20 °			■										■					■		
XOMX 120404TR-ME08	0,4	2,0	21 °		■				■		■		■			■					■		
120408TR-ME08	0,8	1,6	20 °		■			■	■	■	■		■			■					■		
120412TR-ME08	1,2	1,2	20 °		■						■		■			■							
120416TR-ME08	1,6	1,2	20 °		■			■					■			■							
120420TR-ME08	2,0	1,0	20 °		■						■		■			■							
120424TR-ME08	2,4	0,8	20 °		■								■			■							
120431TR-ME08	3,1	0,6	20 °		■			■			■		■			■							
120440TR-ME08	4,0	0,8	20 °		■						■		■			■							
XOMX 120408TR-M12	0,8	1,6	10 °	■	■	■			■	■			■			■					■		
120416TR-M12	1,6	1,2	10 °			■							■			■							
120431TR-M12	3,1	0,6	10 °			■							■			■							
XOMX 120408TR-MD13	0,8	1,6	14 °	■	■	■			■	■			■			■							
120404TR-MD13	0,4	2,0	14 °	■					■							■							
120412TR-MD13	1,2	1,2	14 °	■		■			■							■							
120416TR-MD13	1,6	1,2	14 °	■		■			■							■							
XOMX 120408TR-D14	0,8	1,6	1 °	■	■	■			■														
120431TR-D14	3,1	0,6	1 °			■																	

■ Stock standard

Subject to change refer to current price- and stock-list

XO.X18

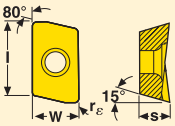

B = Wiper flat width

Size	Dimensions in mm W	l	s
XOEX18..	11,2	16,5	6,35
XOEX18..ZZ	11,2	16,5	6,4
XOMX18..	11,2	16,5	6,42

Part No.	r_ε	B	Cutting rake	Grades																		
				Coated													Uncoated				Cermet		
				MP1500	MP2500	MP3000	MH1000	MM4500	MK1500	MK2050	MS2050	MS2500	T350M	F15M	F25M	F40M	HX	HX	H15	H25	MP1020		
XOEX 180604FR-E10	0,4	2,4	29 °													■				■			
180608FR-E10	0,8	2,4	29 °													■				■			
180616FR-E10	1,6	2,3	29 °																	■			
180620FR-E10	2,0	2,2	29 °																	■			
180631FR-E10	3,1	2,2	29 °																	■			
XOEX 180608ZZR-M10	0,8	9,0	17 °													■							
180616ZZR-M10	1,6	9,0	17 °													■							
XOMX 180604TR-ME13	0,4	2,4	25 °		■											■							
180608TR-ME13	0,8	2,4	25 °		■			■	■				■			■							
180616TR-ME13	1,6	2,3	25 °		■			■															
180620TR-ME13	2,0	2,2	25 °		■											■							
180631TR-ME13	3,1	2,2	25 °		■			■								■							
180640TR-ME13	4,0	0,8	25 °		■																		
XOMX 180604R-M10	0,4	2,4	22 °								■					■							
180608R-M10	0,8	2,4	20 °		■			■			■		■			■					■		
180616R-M10	1,6	2,3	22 °					■			■		■			■							
180620R-M10	2,0	2,2	22 °								■		■			■							
180624R-M10	2,4	2,2	22 °								■					■							
180631R-M10	3,1	2,2	22 °					■			■		■			■							
180640R-M10	4,0	0,8	22 °								■		■			■							
180650R-M10	5,0	0,3	22 °								■		■			■							
180663R-M10	6,3	0,3	22 °								■		■			■							
XOMX 180608TR-M14	0,8	2,4	15 °	■	■	■			■	■			■			■					■		
180612TR-M14	1,2	2,4	15 °	■	■	■			■	■			■			■							
180616TR-M14	1,6	2,3	15 °		■	■			■				■			■							
180620TR-M14	2,0	2,2	15 °		■								■			■							
180624TR-M14	2,4	2,2	15 °		■								■			■							
180631TR-M14	3,1	2,2	15 °		■	■							■			■							
XOMX 180608TR-MD15	0,8	2,4	15 °	■	■	■			■	■			■			■							
180616TR-MD15	1,2	2,3	15 °			■			■				■			■							
180612TR-MD15	1,2	2,4	15 °	■		■			■	■			■			■							
XOMX 180608TR-D16	0,8	2,4	11 °	■	■				■				■										
180631TR-D16	3,1	2,2	11 °	■		■																	

■ Stock standard
Subject to change refer to current price- and stock-list

XPKX

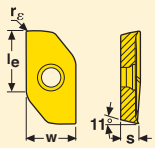

Size	Dimensions in mm W	l_e	s
12T3	10,0	12,1	3,97

E08

Part No.	r_ε	Cutting rake	Grades: Coated MP1500	MP2500	MP3000	MH1000	MM4500	MK1500	MK2050	MS2050	MS2500	T350M	F15M	F25M	F40M	Uncoated HX	H15	H25	Cermet MP1020		
XPKX 12T304PDER-E08	0,4	23,1 °																■			
12T308PDER-E08	0,8	23 °																■			
12T320PDER-E08	2,0	25 °																■			
12T324PDER-E08	2,4	25 °																■			
12T331PDER-E08	3,1	25 °																■			
12T340PDER-E08	4,2	25 °																■			

■ Stock standard
Subject to change refer to current price- and stock-list

150.10

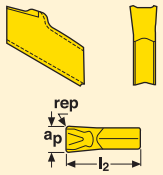

Size	Dimensions in mm l_2	a_p	rep
2.0	9	2,25	0,15
2.5	9	2,50	0,17
3	9	3,10	0,19
4	9	4,10	0,23

150.10-12

150.10-14

150.10-16

Part No.	Cutting rake	Grades: Coated																	Uncoated			
		MP1500	MP2500	MP3000	MH1000	MM4500	MK1500	MK2050	MS2050	MS2500	T350M	F15M	F25M	F40M	CP600	CP500	TGP45	TGP35	HX			
150.10 -2.5N-12	24 °										■				■	■	■	■				
-3N-12	24 °	■									■				■	■	■	■				
-4N-12	24 °										■				■	■	■	■				
150.10 -2.25N-14	15 °										■				■	■	■		■			
-2.5N-14	15 °										■				■	■	■		■			
-3N-14	15 °										■				■	■	■	■	■			
-4N-14	15 °										■				■	■	■	■	■			
150.10 -2.25N-16	20 °										■				■	■	■		■			
-2.5N-16	20 °										■				■	■	■		■			
-3N-16	20 °	■									■				■	■	■	■	■			
-4N-16	20 °										■				■	■	■	■	■			

■ Stock standard
Subject to change refer to current price- and stock-list

Tolerance (mm):
a_p 2.25: +/-0.05
a_p 2.5 - 3.1 - 4.1: +/-0.08

218.19

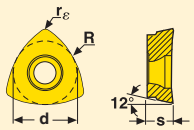

Size	Dimensions in mm d	s
080	5,50	2,38
100	7,06	2,78
125.T3	8,90	3,97
150.04	10,60	4,76
160.04	11,18	4,76
200.05	12,7	5,50
250.06	16,54	6,35

E04-E07

M04-M11

MD04-MD11

ME07-ME12

Part No.	R	r_ε	Cutting rake	Grades: Coated: MP1500	MP2500	MP3000	MH1000	MM4500	MK1500	MK2050	MS2050	MS2500	T350M	F15M	F25M	F40M	Uncoated: HX	H15	H25	Cermet: MP1020		
218.19 -100-E06	10	0,8	20 °																■			
-125-T3-E06	12,5	0,8	20 °																■			
-160-04-E07	16	1,2	20 °																■			
218.19 -125T-T3-ME07	12,5	0,8	20 °													■						
-160T-04-ME08	16	1,2	20 °													■						
-200T-05-ME10	20	0,6	20 °													■						
-250T-06-ME12	25	1,2	20 °																			
218.19 -080T-M04	8	0,4	7 °		■								■			■						
-100T-M06	10	0,8	7 °		■	■		■			■	■	■		■	■						
-125T-T3-M07	12,5	0,8	10 °		■	■		■			■	■	■		■	■						
-150T-04-M08	15	1,2	10 °																			
-160T-04-M11	16	1,2	15 °	■	■							■										
-160T-04-M08	16	1,2	10 °		■	■		■			■	■	■		■	■						
-200T-05-M10	20	0,6	10 °												■	■						
218.19 -080T-MD04	8	0,4	0 °		■							■		■	■							
-100T-MD08	10	0,8	0 °	■	■		■			■		■		■	■							
-125T-T3-MD10	12,5	0,8	0 °	■	■		■			■		■	■	■	■							
-125T-T3-MD08	12,5	0,8	0 °			■																
-160T-04-MD11	16	1,2	0 °	■	■		■			■		■	■	■	■							
-160T-04-MD09	16	1,2	0 °			■																

■ Stock standard
Subject to change refer to current price- and stock-list

218.20

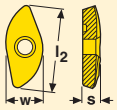

Size	Dimensions in mm W	l_2	s
080	6,88	15,64	3,21
100	8,59	19,55	4,05
125	10,74	24,48	5,05
150	11,91	28,70	5,99
160	12,70	30,61	6,40
200	15,88	38,26	8,06
250	19,85	47,83	10,16

ME04/ME07/ME10/ME12/M04/M05/M07/M08

Part No.	Grades: Coated													Uncoated			Cermet		
	MP1500	MP2500	MP3000	MH1000	MM4500	MK1500	MK2050	MS2050	MS2500	T350M	F15M	F25M	F40M	HX	H15	H25	MP1020		
218.20 -080ER-M04					■							■	■						
-080ER-ME04								■		■			■						
218.20 -100ER-M05					■							■	■						
-100ER-ME05					■			■					■						
218.20 -125ER-M07					■							■	■						
-125ER-ME07					■			■					■						
218.20 -150ER-M08					■								■						
-150ER-ME07								■					■						
218.20 -160ER-M08					■							■	■						
-160ER-ME08					■			■					■						
218.20 -200ER-M10													■						
-200ER-ME10					■			■					■						
218.20 -250ER-ME12					■			■					■						
-250TR-M14													■						

■ Stock standard
Subject to change refer to current price- and stock-list

335.18

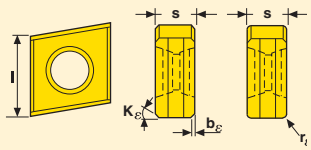

Size	Dimensions in mm l	s
10	10	5,4
13	12,7	5,4
16	16	6,4

E07/E08/E09

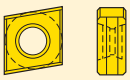

M10/M11/M12

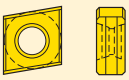

MD10/D13

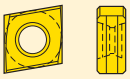

Part No.	r_ε	b_ε	K_ε	Cutting rake	Grades: Coated													Uncoated			Cermet		
					MP1500	MP2500	MP3000	MH1000	MM4500	MK1500	MK2050	MS2050	MS2500	T350M	F15M	F25M	F40M	HX	H15	H25	MP1020		
335.18 -1005-E07	0	0,5	45	20 °														■					
-1305-E08	0	0,5	45	20 °														■					
-1606-E09	0	0,5	45	20 °														■					
335.18 -1005T-M10	0	0,5	45	10 °	■	■				■	■						■	■					
-100508-M10	0,8	0	0	10 °										■									
-1305T-M11	0	0,5	45	10 °	■	■				■	■						■						
-130508-M11	0,8	0	0	10 °										■									
-1606T-M12	0	0,5	45	10 °	■	■											■						
-160608-M12	0,8	0	0	10 °										■									
335.18 -1606T-D13	0	0,5	45	0 °													■						
335.18 -1005ZZ-MD10	0	0,5	45	10 °														■					

■ Stock standard
Subject to change refer to current price- and stock-list

335.19

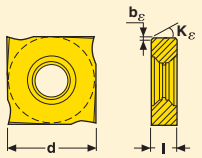

Size	Dimensions in mm d	l
1102	11	2,3
1103	11	2,7
1203	12,7	3,2
1204	12,7	4
12045	12,7	4,5
1205	12,7	5,4
1207	12,7	7

M08

MD09

Part No.	b_ε	K_ε	Cutting rake	Grades: Coated MP1500	MP2500	MP3000	MH1000	MM4500	MK1500	MK2050	MS2050	MS2500	T350M	F15M	F25M	F40M	Uncoated HX	HX	H15	H25	Cermet MP1020		
335.19 -1102-M08	0,1	45	15 °													■							
-1103-M08	0,1	45	15 °													■							
-1203-M08	0,15	45	15 °													■							
-1204-M08	0,15	45	15 °													■							
-12045-M08	0,15	45	15 °													■							
-1205-M08	0,15	45	15 °													■							
-1207-M08	0,15	45	15 °													■							
335.19 -1102T-MD09	0,1	45	15 °																				
-1103T-MD09	0,1	45	15 °																				
-1203T-MD09	0,1	20	15 °													■							
-12045T-MD09	0,1	20	15 °													■							
-1204T-MD09	0,1	20	15 °													■							
-1205T-MD09	0,1	20	15 °		■											■							
-1207T-MD09	0,1	20	15 °													■							

■ Stock standard
Subject to change refer to current price- and stock-list

R235.15

Size	Dimensions in mm l	s
R235.15-032..	40,29	5,0
R235.15-050..	51,44	5,0
R235.15-080..	54,90	5,0

E05

Part No.	Cutting rake	Grades																		
		Coated													Uncoated			Cermet		
		MP1500	MP2500	MP3000	MH1000	MM4500	MK1500	MK2050	MS2050	MS2500	T350M	F15M	F30M	F40M	HX	H15	H25	MP1020		
R235.15 -032-E05	22 °												■							
-050-E05	22 °												■							
-080-E05	22 °												■		■					

■ Stock standard
Subject to change refer to current price- and stock-list

R335.15-13

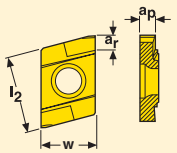

Size	Dimensions in mm a_p	a_r	l_2	W
13110	1,13	1,8	13,5	9
13130	1,33	2	13,5	9
13160	1,63	2,6	13,5	9
13185	1,88	2,6	13,5	9
13215	2,18	3,15	13,5	9
13265	2,68	3,15	13,5	9

E08

M10

Part No.	Cutting rake	Grades: Coated MP1500	MP2500	MP3000	MH1000	MM4500	MK1500	MK2050	MS2050	MS2500	T350M	F15M	F25M	F40M	Uncoated HX	H15	H25	Cermet MP1020		
R335.15 -13110FG-E08	15 °													■						
-13130FG-E08	15 °													■						
-13160FG-E08	15 °													■						
-13185FG-E08	15 °													■						
-13215FG-E08	15 °													■						
-13265FG-E08	15 °													■						
R335.15 -13215FG-M10	0 °													■						
-13265FG-M10	0 °													■						

■ Stock standard
Subject to change refer to current price- and stock-list

Tolerance(mm): a_p: +0/+0.05 - a_r: +0/+0.15

R335.15-18

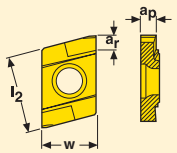

Size	Dimensions in mm a_p	a_r	l_2	W
18315	3,2	3,8	18	9
18350	3,55	4,1	18	9
18400	4,05	4,8	18	9
18415	4,2	4,8	18	9
18500	5,05	5,50	18	9
18515	5,2	5,50	18	9

M12

Part No.	Cutting rake	Grades: Coated													Uncoated			Cermet		
		MP1500	MP2500	MP3000	MH1000	MM4500	MK1500	MK2050	MS2050	MS2500	T350M	F15M	F25M	F40M	HX	H15	H25	MP1020		
R335.15 -18315FG-M12	0 °													■						
-18350FG-M12	0 °													■						
-18400FG-M12	0 °													■						
-18415FG-M12	0 °													■						
-18500FG-M12	0 °													■						
-18515FG-M12	0 °													■						

■ Stock standard
Subject to change refer to current price- and stock-list

Tolerance(mm): a_p: +0/+0.05 - a_r: +0/+0.15

ONEW05

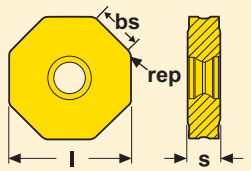

Size	Dimensions in mm		
	l	s	bs
05	12,0	4,427	0,3
05ZZ	11,9	4,427	3,26

Part No.	rep	Cutting rake	Grades								
			CBN200	CBN300	CBN300P	CBN400C	CBN500	CBN600			
ONEW 050410ANSN-02020-LF	1,0	0 °	■								
050410ZZSR4-02020LF	1,0	0 °	■								

OFEN

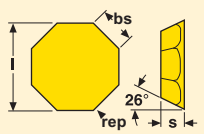

Size	Dimensions in mm		
	l	s	bs
07	17,96	4,76	1,6

Part No.	rep	Cutting rake	Grades								
			CBN200	CBN300	CBN300P	CBN400C	CBN500	CBN600			
OFEN 070405TN-MD16-LF	0,5	0 °	■								

■ Stock standard
Subject to change refer to current price- and stock-list

RDHW

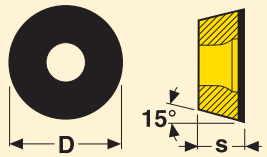

Size	Dimensions in mm	
	D	s
08	8,00	3,18
10	10,00	3,97

Part No.	Cutting rake	Grades								
		CBN200	CBN300	CBN300P	CBN400C	CBN500	CBN600			
RDHW 0803M0S-01030-LF	0 °	■								
10T3M0S-01030-LF	0 °	■								

RN.N06/09

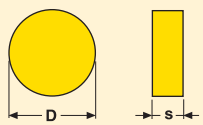

Size	Dimensions in mm	
	D	s
06	6,35	3,18
09	9,52	3,18
12	12,70	4,76

Part No.	Cutting rake	Grades								
		CBN200	CBN300	CBN300P	CBN400C	CBN500	CBN600			
RNGN 060300S-02020-LF	0 °	■								
060300S-01525-LF	0 °									
090300S-01525-LF	0 °									
090300S-02020-LF	0 °	■								
120400S-02020-LF	0 °	■								

■ Stock standard
Subject to change refer to current price- and stock-list

RNGN-LF06/09

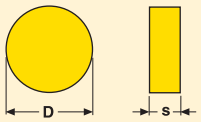

Size	Dimensions in mm	
	D	s
06	6,35	3,18
09	9,52	3,18

Part No.	Cutting rake	Grades								
		CBN200	CBN300	CBN300P	CBN400C	CBN500	CBN600			
RNGN 060300S	0 °	■								
090300S	0 °	■								
RNMN 060300S	0 °		■	■						
060300S-02020P	0 °						■			
090300E	0 °		■		■					
090300S	0 °		■	■						
090300S-02020	0 °				■	■				
090300S-02020P	0 °						■			

■ Stock standard
Subject to change refer to current price- and stock-list

SEE.12

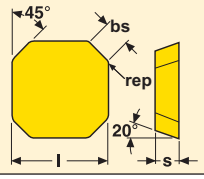

Size	Dimensions in mm		
	l	s	bs
12	12,7	3,18	1,50
12	12,70	3,18	1,60

Part No.	rep	Cutting rake	Grades								
			CBN200	CBN300	CBN300P	CBN400C	CBN500	CBN600			
SEEN 1203AFTN-D16	1,0	0 °		■							
SEEX 1203AETN-MD13-LF	1,0	0 °	■								

SEEX

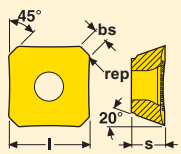

Size	Dimensions in mm		
	l	s	bs
09	9,52	3,97	1,25
12	12,70	4,76	1,60
12ZZ	12,70	4,76	7,53

Part No.	rep	Cutting rake	Grades								
			CBN200	CBN300	CBN300P	CBN400C	CBN500	CBN600			
SEEX 09T3AFTN-D09-LF	0,5	0 °	■								
1204AFTN-D16-LF	1,1	0 °	■								
1204ZZTN-D16-LF	1,0	0 °	■								

■ Stock standard
Subject to change refer to current price- and stock-list

SN..06/09/SNEX12

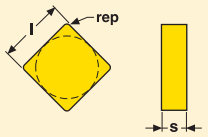

Size	Dimensions in mm	
	l	s
06	6,350	3,18
09	9,525	3,18
12ZZ	12,700	3,18

Part No.	rep	Cutting rake	Grades								
			CBN200	CBN300	CBN300P	CBN400C	CBN500	CBN600			
SNMN 060308E	0,794	0 °				■					
060308S	0,794	0 °		■							
090308E	0,794	0 °		■							
090308S	0,794	0 °		■	■						
090312E	1,191	0 °		■							
090312S	1,191	0 °		■	■						
090312S-02020P	1,191							■			
090316S	1,588	0 °		■							
SNGN 090308E	0,8	0 °	■								
090308S	0,8	0 °	■								
090312S	1,2	0 °	■								
090316S	1,6	0 °	■								
SNEX 120312ZZ	1,2	0 °	■								

■ Stock standard
Subject to change refer to current price- and stock-list

SNEN

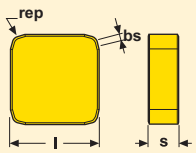

Size	Dimensions in mm		
	l	s	bs
09	9,52	3,18	0,9

Part No.	rep	Cutting rake	Grades								
			CBN200	CBN300	CBN300P	CBN400C	CBN500	CBN600			
SNEN 0903ENE-M06	0,8	0 °	■								
0903ENS-M08	0,8	0 °	■								

■ Stock standard
Subject to change refer to current price- and stock-list

TNGN

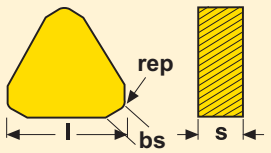

Size	Dimensions in mm		
	l	s	bs
11	10,999	3,18	1,0
16	16,498	4,76	1,9
16..PRS	16,498	4,76	1,3

Part No.	rep	Cutting rake	Grades								
			CBN200	CBN300	CBN300P	CBN400C	CBN500	CBN600			
TNGN 1103PNE	0,8	0 °	■								
1103PNS	0,8	0 °	■								
1103PRS	1,2	0 °	■								
1604PNE	0,8	0 °	■								
1604PNS	0,8	0 °	■								
1604PRS	1,2	0 °	■								

218.19

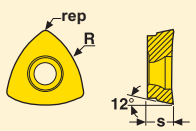

Size	Dimensions in mm	
	d	s
100	7,00	2,81

Part No.	R	rep	Cutting rake	Grades								
				CBN200	CBN300	CBN300P	CBN400C	CBN500	CBN600			
218,19 -100T-MD08-LF	10	0,8	0 °	■								

■ Stock standard
Subject to change refer to current price- and stock-list

APHT

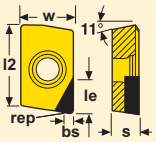

Size	Dimensions in mm				
	W	l_2	s	bs	l_e
16	9,475	16,886	4,86	2,458	5,6

Part No.	rep	Cutting rake	Grades			
			PCD20	PCD05	PCD30	PCD30M
APHT 160408FR-M08	0,8	15 °	■			

■ Stock standard
Subject to change refer to current price- and stock-list

OFEN

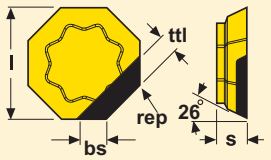

Size	Dimensions in mm			
	l	s	bs	ttl
07	17,95	4,76	7,009	3,5

Part No.	rep	Cutting rake	Grades			
			PCD20	PCD05	PCD30	PCD30M
OFEN 070405FN-M09	0,5	0 °	■			

OFEX

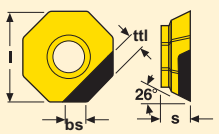

Size	Dimensions in mm			
	l	s	bs	ttl
05	12,79	3,97	4,893	2,5

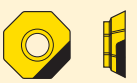

Part No.	rep	Cutting rake	Grades			
			PCD20	PCD05	PCD30	PCD30M
OFEX 05T305FN-M05	0,5	0 °	■			

■ Stock standard
Subject to change refer to current price- and stock-list

SEEX

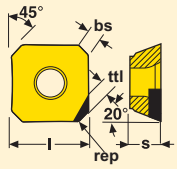

Size	Dimensions in mm			
	l	s	bs	ttl
09	9,525	3,97	1,5	3,0

Part No.	rep	Cutting rake	Grades			
			PCD20	PCD05	PCD30	PCD30M
SEEX 09T3AFFN-L1	0,4	12 °	■	■		

SEHN

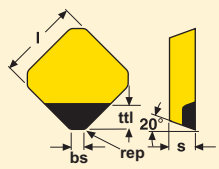

Size	Dimensions in mm			
	l	s	bs	ttl
12	12,7	3,18	1,6	4,0

Part No.	rep	Cutting rake	Grades			
			PCD20	PCD05	PCD30	PCD30M
SEHN 1203AFFN-E08	1,0	0 °	■			

■ Stock standard
Subject to change refer to current price- and stock-list

XCHX

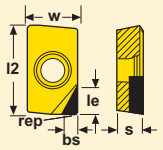

Size	Dimensions in mm				
	W	l_2	s	bs	l_e
13	7,98	13,65	4,41	1,20	5,6

Part No.	rep	Cutting rake	Grades			
			PCD20	PCD05	PCD30	PCD30M
XCHX 13T304FR-M06	0,35	15 °	■			

■ Stock standard
Subject to change refer to current price- and stock-list

XOEX

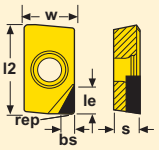

Size	Dimensions in mm				
	W	l_2	s	bs	l_e
06	4,09	6,94	2,45	1,50	3,4
10	6,87	11,08	3,77	1,08	5,51
12	8,18	13,88	5,03	1,54	5,6
12-L2	8,18	13,70	4,95	2,39	6,52

Part No.	rep	Cutting rake	Grades			
			PCD20	PCD05	PCD30	PCD30M
XOEX 060204FR	0,4	8 °		■		
XOEX 10T304F	0,4	15 °	■	■		
XOEX 120404FR	0,4	15 °	■		■	
120404FR-L2	0,4	14 °		■		

■ Stock standard
Subject to change refer to current price- and stock-list

HNEF

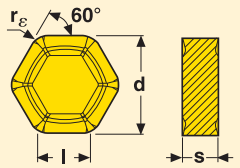

Size	Dimensions in mm l	d	s
	9,37	16,22	5,60

M14

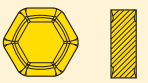

Part No.	r_ε	Cutting rake	Grades: Coated MP1500	MP2500	MP3000	MH1000	MM4500	MK1500	MK2050	MS2050	MS2500	T350M	F15M	F25M	F40M	Uncoated HX	H15	H25	Cermet MP1020		
HNEF 090531-M14	3,1							■													

SBAN

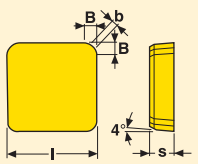

Size	Dimensions in mm l	s
12	12,7	3,18

ZZ

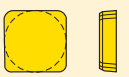

Part No.	B	Cutting rake	Grades: Coated MP1500	MP2500	MP3000	MH1000	MM4500	MK1500	MK2050	MS2050	MS2500	T350M	F15M	F25M	F40M	Uncoated HX	H15	H25	Cermet MP1020		
SBAN 1203ZZ		0 °											■								

■ Stock standard
Subject to change refer to current price- and stock-list

SNKN

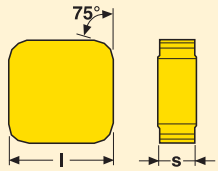

Size	Dimensions in mm l	s
12	12,7	4,76

M10

Part No.	B	Cutting rake	Grades																		
			Coated													Uncoated			Cermet		
			MP1500	MP2500	MP3000	MH1000	MM4500	MK1500	MK2050	MS2050	MS2500	T350M	F15M	F25M	F40M	HX	H15	H25	MP1020		
SNKN 1204EN-M10	1,5	0 °						■													

SPER

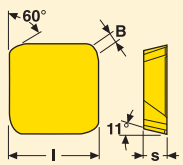

Size	Dimensions in mm l	s
SPER 1906	19,05	6,35

M17

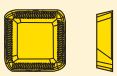

Part No.	B	Cutting rake	Grades																		
			Coated													Uncoated			Cermet		
			MP1500	MP2500	MP3000	MH1000	MM4500	MK1500	MK2050	MS2050	MS2500	T350M	F15M	F25M	F40M	HX	H15	H25	MP1020		
SPER 1906ZETR-M17	1,8	17 °					■					■									

■ Stock standard
Subject to change refer to current price- and stock-list

SPKN/SPKR

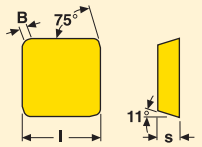

Size	Dimensions in mm l	s
SPK... 1203	12,7	3,17
SPK...1203	12,7	3,17
SPK... 1504	15,875	4,76
SPK... 1504	15,87	4,76

M15/MD14/MD17

ME12/ME14

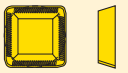

ZZ.-M15

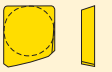

Part No.	B	Cutting rake	Grades																		
			Coated													Uncoated			Cermet		
			MP1500	MP2500	MP3000	MH1000	MM4500	MK1500	MK2050	MS2050	MS2500	T350M	F15M	F30M	F40M	HX	H15	H25	MP1020		
SPKN 1203EDTR-MD14	1,4	0 °										■									
1203EDTL-MD14	1,4	0 °																			
SPKR 1203EDTR-ME12	1,4	20 °													■						
1504EDTR-ME14	1,4	20 °										■									
SPKN 1504EDR-M15	1,4	0 °														■					
1504EDTR-MD17	1,4	0 °										■									
1504ZZL-M15	10	0 °												■							
1504ZZR-M15	10	0 °												■							

■ Stock standard
Subject to change refer to current price- and stock-list

Introduction

Polycrystalline Cubic Boron Nitride (PCBN) is a material which is sintered at extremely high pressure and high temperature into a wear-resistant material with properties close to those of diamond. Due to the hot hardness, oxidation resistance and fracture toughness of the material, inserts made of PCBN have excellent edge strength and long tool life when machining hard ferrous materials and pearlitic grey cast iron.

Secomax™ PCBN inserts are suitable for machining:

- Hardened steel (including hard-facing alloys)
- Pearlitic grey cast iron
- Chilled and white cast iron
- Manganese steel
- Cemented carbide
- Powder Metallurgy (PM) alloys

For more information including a comprehensive guide to understanding and applying PCBN successfully, please ask your sales representative for the Secomax™ PCBN, Technical Guide (available in English).

Selection of insert types

Solid insert

According to the geometry, two sides can be used.

Grades:
CBN200, CBN300, CBN300P, CBN500, CBN600

Sintered layer insert -LF

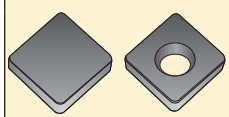

CBN layer sintered on to carbide. One side is usable.

Grades:
CBN200

Face milling cutter type R217/220.70

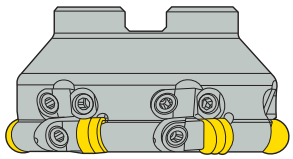

Cutter especially developed for CBN inserts, 2 insert sizes.
Maximum cutting depth 3 mm D_c = 20-63 mm and maximum cutting depth 4,5 mm Dc = 63-200 mm (D_c = 125-200 mm fitted with wiper insert).

Inserts for finishing	RNGN060300E (E = honed) RNGN/RNMN090300E
Inserts for roughing	RNGN/RNMN060300S (S = chamfered and honed) RNGN/RNMN090300S
Wiper insert	SNEX120312ZZ

The relation between cutting depth and number of usable cutting edges (per side).

D.O.C a_p (mm)	RN.. 060300	RN.. 090300	D.O.C a_p (mm)	RN.. 060300	RNMN 090300
0,1	20	24	1,2	5	7
0,15	16	20	1,5	5	6
0,2	14	17	1,8	4	5
0,25	12	15	2,0	4	5
0,3	11	14	2,5	3	4
0,4	10	12	3,0	3	4
0,5	8	10	3,5	–	4
0,8	7	8	4,0	–	3
1,0	6	7	4,5	–	–

Face milling cutter type 220.74

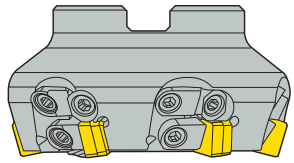

Cutter especially developed for CBN inserts, maximum cutting depth 8,0 mm D = 63-200 mm. (D = 125-200 mm fitted with wiper insert).

Inserts for finishing	SNEN0903ENE-M06 (E = honed) SNMN090308E SNMN090312E
Inserts for roughing	SNEN0903ENS-M08 (S = chamfered and honed) SNMN090308S SNMN090312S SNMN090316S
Wiper insert	SNEX120312ZZ

Square shoulder and slot milling cutter type R220.68

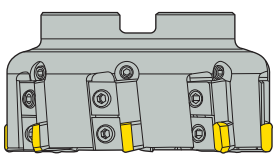

Cutter especially developed for CBN inserts. D = 63-160 mm

Insert with corner chamfer for finishing operations	TNGN1604PNE
Insert with corner chamfer for roughing operations	TNGN1604PNS
Insert with corner radius for roughing operations	TNGN1604PRS

Inserts for standard milling cutters

For roughing **SEEX09T3AFTN-D09-LF** **SEEX1204AFTN-D16-LF** R220.53 Face milling cutter Wiper insert for high quality surface finish **SEEX1204ZZTN-D16-LF** 	For roughing **OFEN070405-MD16-LF** R220.43 Face milling cutter RDHW0803M0S-01030-LF R217/220.29 Copy milling cutter R335.25/R335.18 Disc milling cutter 	For roughing **ONEW05** Octomill R217/220.48 Face milling cutter 218.19-100T-MD08-LF High feed milling cutter 	For roughing **SEEN1203AFTN-D16** R220.13 Face milling cutter 	For finishing **SEEX1203AETN-MD13-LF** R220.30 Face milling cutter

Cutting data

- Cutting speed recommendations are in the cutting data table.
- Feed rate recommendations are in the cutting data table.
- Formulae for cutting data calculation are on page

Grades

CBN200 (Tipped and Full-face) 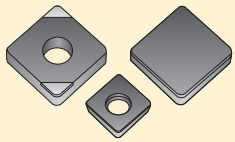	Format: Full-face layer and brazed tips (single sided). Composition: 85% cBN content grade with an average grain size of 2 µm and a Co-W-Al ceramic binder. Coating: No coating
CBN200 (Solid) 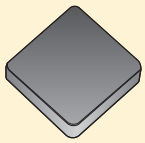	Format: Solid. Composition: 90% cBN content grade with an average grain size of 3-6 µm and a Al ceramic binder. Coating: No coating.
CBN300, CBN300P 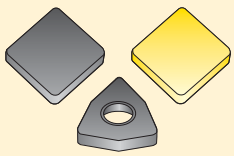	Format: Solid. Composition: 90% cBN content grade with an average grain size of 22 µm and a Al ceramic binder. Coating: CBN300: No coating. CBN300P: (Ti, Al)N coating.
CBN400C 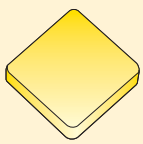	Format: Solid. Composition: 90% cBN content grade with an average grain size of 3-6 µm and a Al ceramic binder. Coating: (Ti, Si)N coating.
CBN500 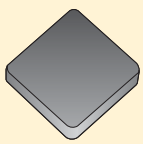	Format: Solid. Composition: 90% cBN content grade with an average grain size of 15 µm and a AlN ceramic binder. Coating: No coating.
CBN600 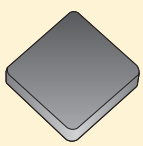	Format: Solid. Composition: 90% cBN content grade with multi modal grain size and AlN ceramic binding. Coating: No coating.

SMG	Properties	Reference	Recommendations
K1	Grey cast irons (GCI)	EN-GJL-250	First choice for finish- and rough machining: CBN200. Adjust the depth of cut to get under casting skin and blow holes.
K4	Nodular cast irons (SGI)	EN-GJS-500-7	First choice for finish machining: CBN200. Adjust the depth of cut to get under casting skin and blow holes.

SMG	Properties	Reference	Recommendations
H3	Case hardened steels	16 MnCr 5 60 HRC	First choice for finish machining: CBN200
H5	Quenched & Tempered steels	42 CrMo 4 50 HRC	First choice for finish machining: CBN200

SMG	Properties	Reference	Recommendations
H7	Quenched & Tempered steels Bearing steels	100 Cr 6 60 HRC	First choice for finish- and rough machining: CBN200.
H8	Tool steels High Speed Steels	X 40 CrMoV 5 1 50 HRC	First choice for finish machining: CBN160C. First choice for rough machining: CBN200. Milling in high speed steels cannot be done
H21	Manganese steels	X 120 Mn 12 50 HRC	First choice for finish- and rough machining: CBN200.
H31	White cast irons	EN-GJN-HV600(XCr11) 55 HRC	First choice for finish- and rough machining: CBN200.

SMG	Properties	Reference	Recommendations
PM1	Low alloy PM materials	F-0008 Fe-0.7C	PCBN tools can be used on PM parts as soft as 25 HRC. The critical parameter is particle hardness, when the particle hardness exceeds 50 HRC, PCBN is useful, no matter what the bulk hardness is. First choice for finish- and rough machining: CBN200.
PM2	Medium alloy PM materials	FLC-4608 Fe2Cu1.8Ni0.5Mo0.2Mn0.8C	PCBN tools can be used on PM parts as soft as 25 HRC. The critical parameter is particle hardness, when the particle hardness exceeds 50 HRC, PCBN is useful, no matter what the bulk hardness is. First choice for finish- and rough machining: CBN200.

SMG	Properties	Reference	Recommendations
HF1	Hard facing alloys Welded or plasma deposited iron based alloys		Co-based alloys – Hardness >35 HRC. Ni-based alloys – Hardness >35 HRC. Fe-based alloys – Hardness >35 HRC. First choice for finish machining: CBN200. First choice for rough machining: CBN500. Milling in Cr-based alloys cannot be done
HF2	Hard facing alloys Welded or plasma deposited cubalt and nickel based alloys		Co-based alloys – Hardness >35 HRC. Ni-based alloys – Hardness >35 HRC. Fe-based alloys – Hardness >35 HRC. First choice for finish machining: CBN200. First choice for rough machining: CBN500. Milling in Cr-based alloys cannot be done

PCBN, Roughing a_p 0,5-3,0 mm

SMG	CBN200		CBN300		CBN500	
	v_c	f_z	v_c	f_z	v_c	f_z
K1	700 — 1700	0,050 — 0,20	700 — 1700	0,050 — 0,20	700 — 1700	0,050 — 0,20
H3	—	—	—	—	—	—
H5	—	—	—	—	—	—
H7	—	—	—	—	—	—
H8	—	—	—	—	—	—
H11	—	—	—	—	—	—
H21	—	—	—	—	130 — 230	0,050 — 0,20
H31	—	—	—	—	100 — 270	0,050 — 0,20
PM1	180 — 400	0,050 — 0,20	—	—	—	—
PM2	150 — 300	0,050 — 0,20	—	—	—	—
PM3	—	—	—	—	—	—
HF1	150 — 240	0,050 — 0,20	—	—	150 — 250	0,050 — 0,20
HF2	120 — 300	0,050 — 0,20	—	—	120 — 300	0,050 — 0,20

PCBN, Finishing a_p < 0,5 mm

SMG	CBN200		CBN300		CBN500	
	v_c	f_z	v_c	f_z	v_c	f_z
K1	700 — 1900	0,050 — 0,20	700 — 1700	0,050 — 0,20	700 — 1700	0,050 — 0,20
H3	—	—	—	—	—	—
H5	—	—	—	—	—	—
H7	200 — 300	0,050 — 0,20	—	—	—	—
H8	170 — 250	0,050 — 0,20	—	—	—	—
H11	—	—	—	—	—	—
H21	—	—	—	—	130 — 230	0,050 — 0,20
H31	—	—	—	—	100 — 270	0,050 — 0,20
PM1	180 — 400	0,050 — 0,20	—	—	—	—
PM2	150 — 300	0,050 — 0,20	—	—	—	—
PM3	—	—	—	—	—	—
HF1	—	—	—	—	—	—
HF2	—	—	—	—	—	—

Problem	Cause	Suggested action(s)
Flank wear 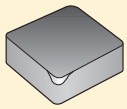	Not correct edge temperature	• Increase cutting speed • Increase feed rate • Increase depth of cut • Check cutting tool centre height • Check the ferrite content
Crater wear 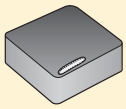	Not correct edge temperature	• Decrease cutting speed • Decrease feed rate • Reduce chamfer angle • Use E edge preparation • Use coated insert • Use coolant (only in continuous cut)
Notch wear 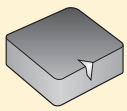	Not correct edge temperature Too high cutting forces	• Increase cutting speed • Decrease feed rate • Increase insert approach angle (preferably round inserts) • Vary the depth of cut • Use inserts with chamfered cutting edges
Edge chipping 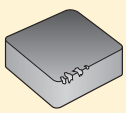	Too high cutting forces	• Use inserts with chamfered cutting edges • Increase system rigidity • For interrupted cuts, chamfer the tool entry/exit slots and holes • Vary the cutting speed to eliminate vibrations
Edge flaking (continuous cut) 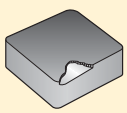	Too high cutting forces	• Increase cutting speed • Reduce feed rate • Use chamfered and honed cutting edges • Check cutting tool center height • Reduce insert approach angle
Edge flaking (interrupted cut) 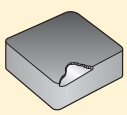	Too high cutting forces	• Do not use coolant • Use chamfered and honed cutting edges • Reduce feed rate • Increase cutting speed • Check cutting tool centre height • Reduce insert approach angle
Edge breakage	Too high cutting forces	• Reduce depth of cut • Reduce cutting speed • Increase nose radius • Use chamfered and honed inserts • Check cutting tool center height
Insert breakage 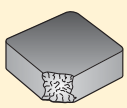	Too high cutting forces	• Check insert seating • Check insert shim and insert clamp • Check cutting tool centre height

Introduction

Polycrystalline Diamond (PCD) is produced by sintering together carefully selected particles of diamond under conditions of high temperature and high pressure. PCD cutting tools combine the hardness, abrasion resistance and thermal conductivity of diamond with the toughness of tungsten carbide.

Secomax™ PCD inserts are suitable for machining non-ferrous metals and alloys, e.g.:

- Aluminium
- Copper
- Brass
- Bronze
- Cemented carbide

It can also be used for other materials, e.g.:

- Composites (MMC, ...)
- Reinforced plastics
- Graphite
- Tungsten carbide
- Ceramics
- Titanium alloys

Selection of insert types

Sintered layer -LF

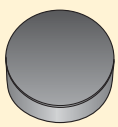

PCD sintered on carbide.
All cutting edges on one side are usable.

Grades:
PCD20, PCD30M

Brazed tip -L1 and L2

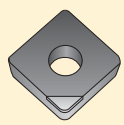

PCD brazed on to standard carbide inserts.

Grades:
PCD05, PCD20, PCD30

Inserts for standard milling cutters

SEHN12
R220.13
R220.30
Face milling cutter

SEEX12
R220.53
Face milling cutter

OFEN07
Face milling cutter
R220.43

OFEX05
R220.43
Face milling cutter

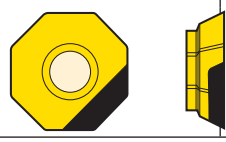

XC..13
R220.69
Square shoulder milling cutter

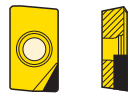

XOEX06/10/12
217/220.69
Square shoulder milling cutters

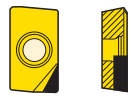

AP..16
R220.69
Square shoulder milling cutter

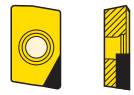

Cutting data

- Cutting speed recommendations are in the cutting data table.
- Feed rate recommendations are in the cutting data table.
- Formulae for cutting data calculation are on page

Note: All PCD milling inserts for these cutters are designed with Wiper flat for surface finish

Grades

PCD05 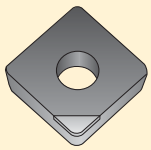	Format: Brazed tips (single sided). Composition: Grade with an average grain size of < 1 µm and a Co binder. Coating: No coating.
PCD20 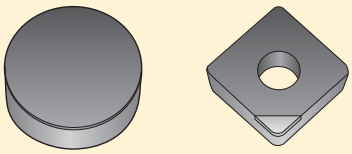	Format: Full-face brazed layer and brazed tips (single sided). Composition: Grade with an average grain size of 10 µm and a Co binder. Coating: No coating.
PCD30 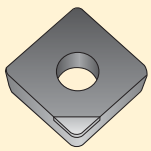	Format: Full-face brazed layer (single sided). Composition: Grade with an average grain size of 25 µm and a Co binder. Coating: No coating.
PCD30M 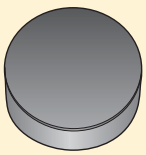	Format: Full-face brazed layer (single sided). Composition: Grade with an average grain size of 2-30 µm and a Co binder. Coating: No coating.

Cast iron

SMG	Properties	Reference	Recommendations
K2	Compacted graphite irons (CGI)	EN-GJV-400	PCD can be used for finish machining.

Non-ferrous metals

SMG	Properties	Reference	Recommendations
N1	Aluminium alloys, Si < 9%	AW-7075	First choice for finish and rough machining: PCD20.
N2	Aluminium alloys, 9% < Si < 16%	AC-44200 Si = 12%	First choice for finish and rough machining: PCD20.
N3	Aluminium alloys, Si >16%	AlSi17Cu5	First choice for finish and rough machining: PCD30.
N11	Copper alloys	CW614N	First choice for finish and rough machining: PCD20.

Graphites

SMG	Properties	Reference	Recommendations
GR1	Graphite	R 8500	First choice for finish- and rough machining: PCD20.

Plastic and composites

SMG	Properties	Reference	Recommendations
TS1	Thermosetting polymers	Urea formaldehyde (UF)	First choice for finish and rough machining: PCD20.
TS2	Thermosetting Carbon fibre composites	T300 T700 T800 HTA-S IMA - Epoxy (M21)...	First choice for finish and rough machining: PCD20.
TS3	Thermosetting Glass fibre composites	Epoxy - HX..(42..)/E glass (7781...)...	First choice for finish and rough machining: PCD20.
TS4	Thermosetting Aramide fibre composites	Kevlar 49	First choice for finish and rough machining: PCD20.
TP1	Thermoplastic polymers	Polycarbonate (PC)	First choice for finish and rough machining: PCD20.
TP2	Thermoplastic Carbon fibre composites	PPS/PEEK - T300..	First choice for finish and rough machining: PCD20.
TP3	Thermoplastic Glass fibre composites	PPS/PEEK - E glass or A glass...	First choice for finish and rough machining: PCD20.
TP4	Thermoplastic Aramide fibre composites		First choice for finish and rough machining: PCD20.

PCD, Roughing a_p 0,5 - 3,0 mm

	PCD05		PCD20		PCD30		PCD30M	
SMG	v_c	f_z	v_c	f_z	v_c	f_z	v_c	f_z
N1	600 — 3500	0,050 — 0,30	600 — 3500	0,050 — 0,30	—	—	—	—
N2	400 — 2500	0,050 — 0,20	400 — 2500	0,050 — 0,20	—	—	—	—
N3	300 — 1000	0,050 — 0,10	—	—	300 — 1000	0,050 — 0,10	300 — 1000	0,050 — 0,10
N11	600 — 1200	0,10 — 0,50	600 — 1200	0,10 — 0,50	400 — 1200	0,10 — 0,50	600 — 1200	0,10 — 0,50
TS1	100 — 1500	0,10 — 0,40	100 — 1500	0,10 — 0,40	—	—	—	—
TS2	400 — 800	0,10 — 0,20	400 — 800	0,10 — 0,20	400 — 800	0,10 — 0,20	400 — 800	0,10 — 0,20
TS3	100 — 800	0,050 — 0,20	100 — 800	0,050 — 0,20	100 — 800	0,050 — 0,20	100 — 800	0,050 — 0,20
TS4	400 — 800	0,10 — 0,20	400 — 800	0,10 — 0,20	400 — 800	0,10 — 0,20	400 — 800	0,10 — 0,20
TP1	100 — 1500	0,10 — 0,40	100 — 1500	0,10 — 0,40	—	—	—	—
TP2	400 — 800	0,10 — 0,20	400 — 800	0,10 — 0,20	400 — 800	0,10 — 0,20	400 — 800	0,10 — 0,20
TP3	100 — 800	0,050 — 0,20	100 — 800	0,050 — 0,20	100 — 800	0,050 — 0,20	100 — 800	0,050 — 0,20
TP4	400 — 800	0,10 — 0,20	400 — 800	0,10 — 0,20	400 — 800	0,10 — 0,20	400 — 800	0,10 — 0,20
GR1	100 — 1500	0,10 — 0,20	100 — 1500	0,10 — 0,20	—	—	—	—

PCD, Finishing a_p < 0,5 mm

	PCD05		PCD20		PCD30		PCD30M	
SMG	v_c	f_z	v_c	f_z	v_c	f_z	v_c	f_z
N1	600 — 3500	0,050 — 0,30	600 — 3500	0,050 — 0,30	—	—	—	—
N2	400 — 2500	0,050 — 0,20	400 — 2500	0,050 — 0,20	—	—	—	—
N3	300 — 1000	0,050 — 0,10	—	—	300 — 1000	0,050 — 0,10	300 — 1000	0,050 — 0,10
N11	600 — 1200	0,10 — 0,50	600 — 1200	0,10 — 0,50	400 — 1200	0,10 — 0,50	600 — 1200	0,10 — 0,50
TS1	100 — 1500	0,10 — 0,40	100 — 1500	0,10 — 0,40	—	—	—	—
TS2	400 — 800	0,10 — 0,20	400 — 800	0,10 — 0,20	400 — 800	0,10 — 0,20	400 — 800	0,10 — 0,20
TS3	100 — 800	0,050 — 0,20	100 — 800	0,050 — 0,20	100 — 800	0,050 — 0,20	100 — 800	0,050 — 0,20
TS4	400 — 800	0,10 — 0,20	400 — 800	0,10 — 0,20	400 — 800	0,10 — 0,20	400 — 800	0,10 — 0,20
TP1	100 — 1500	0,10 — 0,40	100 — 1500	0,10 — 0,40	—	—	—	—
TP2	400 — 800	0,10 — 0,20	400 — 800	0,10 — 0,20	400 — 800	0,10 — 0,20	400 — 800	0,10 — 0,20
TP3	100 — 800	0,050 — 0,20	100 — 800	0,050 — 0,20	100 — 800	0,050 — 0,20	100 — 800	0,050 — 0,20
TP4	400 — 800	0,10 — 0,20	400 — 800	0,10 — 0,20	400 — 800	0,10 — 0,20	400 — 800	0,10 — 0,20
GR1	100 — 1500	0,10 — 0,20	100 — 1500	0,10 — 0,20	—	—	—	—

Troubleshooting

Problem	Cause	Suggested action(s)
Flank wear 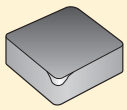	Wrong grade Precense of Fe/Ni/Co	• Change to coarser PCD grade • Check material composition • Reduce cutting speed • Use coolant
Built-up edge	Not correct edge temperature Wrong grade	• Decrease or increase cutting speed • Choose a sharper insert • Change to a finer grade
Edge chipping 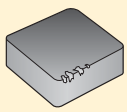	Poor rigidity Wrong grade Incorrect cutting data High run-out	• Minimize vibrations • Change to a tougher grade • Change cutting data • Check set-up
Poor surface finish	Wrong grade Too high cutting data Incrrect wiper position	• Change to a finer PCD grade • Reduce cutting speed and feed rate • Check wiper position
Flaking of work-piece	To high depth of cut	• Decrease depth of cut • Add entry chamfer on component

Helical interpolation ramping

The milling cutter design and the clearance on the bottom side of the chosen insert determines the tool's suitability for helical interpolation ramping.
Maximum and minimum hole diameters and maximum cutting depth per revolution recommendations for suitable tools are in the tables below.
For cutting data calculation please see page

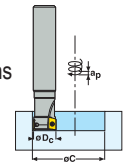

	Cutter dia Ø D_c mm	Cutter dia Ø D_{c2} mm	C min/a_p max		C max/a_p max	
			C min Ø	a_p max	C max Ø	a_p max
R217/220.69-06*	10	–	14	1,1	19	3,0
	12	–	18	1,0	23	2,5
	16	–	26	0,9	31	2,0
	20	–	35	0,9	39	1,8
	25	–	45	0,9	49	1,7
	32	–	58	0,9	63	1,7
	40	–	74	0,9	79	1,6
R217/220.69-10**	16		21	1,4	30	4,0
	18	–	25	1,3	34	3,4
	20	–	29	1,2	38	3,1
	25	–	39	1,1	48	2,5
	32	–	53	1,1	62	2,3
	40	–	69	1,1	78	2,2
	50	–	90	1,1	98	2,1
	63	–	116	1,1	124	2,1
	80	–	150	1,1	158	2,0
	100	–	190	1,1	198	2,0
217/220.69-12***	20	–	28	2,0	37	3,7
	25	–	38	1,8	47	3,3
	32	–	52	1,7	61	2,9
	40	–	68	1,7	77	2,9
	50	–	88	1,7	97	2,8
	63	–	115	1,7	123	2,8
	80	–	149	1,7	157	2,8
	100	–	192	1,7	197	2,7
	125	–	242	1,7	247	2,7
217/220.69-18****	32	–	48	3,1	61	7,3
	40	–	64	2,8	77	5,9
	50	–	85	2,7	97	5,4
	63	–	109	2,7	123	5,1
	80	–	144	2,7	157	4,9
	100	–	184	2,7	197	4,7
	125	–	234	2,7	247	4,6
	160	–	304	2,7	317	4,5
R220.90-26 ABEX	63	–	107	2,7	123	4,9
	80	–	141	2,7	157	4,7
	100	–	181	2,7	197	4,7
	125	–	231	2,7	247	4,6
	160	–	301	2,7	317	4,5

	Cutter dia Ø D_c mm	Cutter dia Ø D_{c2} mm	C min/a_p max		C max/a_p max	
			C min Ø	a_p max	C max Ø	a_p max
R217/220-97-VPGX R0,5-R4,0	32	–	56	10	63	10
	40	–	72	10	79	10
	50	–	92	10	99	10
	63	–	118	10	125	10
	80	–	152	10	159	10
	100	–	192	10	199	10
R217/220-97-VPGX R4,8-R6,3	32	–	51,4	5	54,4	5
	40	–	67,4	5	70,4	5
	50	–	87,4	5	90,4	5
	63	–	113,4	5	116,4	5
	80	–	147,4	5	150,4	5
	100	–	187,4	5	190,4	5
R217/220-97-XPKX	25	–	40	7,5	49	7,5
	32	–	54	7,5	63	7,5
	40	–	70	7,5	79	7,5
	50	–	90	7,5	99	7,5
R220.21-SC	31	50	81	1,0	98	1,0
	33	52	85	1,0	102	1,0
	44	63	107	1,0	124	1,0
	47	66	113	1,0	130	1,0
	61	80	141	1,0	158	1,0
	65	84	149	1,0	166	1,0
	81	100	181	1,0	198	1,0
	106	125	231	1,0	248	1,0
	141	160	301	1,0	318	1,0

When changing ramping direction, using max. ramping angle, retract the cutter *0,6 mm, **0,8 mm, ***1,4 mm, ****1,9 mm.

Helical interpolation ramping

The milling cutter design and the clearance on the bottom side of the chosen insert determines the tool's suitability for helical interpolation ramping.
Maximum and minimum hole diameters and maximum cutting depth per revolution recommendations for suitable tools are in the tables below.
For cutting data calculation please see page

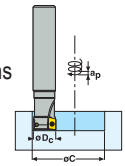

	Cutter dia Ø D_c mm	Cutter dia Ø D_{c2} mm	C min/a_p max		C max/a_p max	
			C min Ø	a_p max	C max Ø	a_p max
217/220.29-025						
	5	10	15	2,5	19	2,5
	7	12	19	2,5	23	2,5
	10	15	25	2,5	29	2,5
	15	20	35	2,5	39	2,5
217/220.29-03						
	6	12	18	3	23	3
	10	16	26	3	31	3
	14	20	34	3	39	3
	19	25	44	3	49	3
	26	32	58	3	63	3
	34	40	74	3	79	3
217/220.29-035						
	8	15	23	3,5	29	3,5
	9	16	25	3,5	31	3,5
	13	20	33	3,5	39	3,5
	18	25	43	3,5	49	3,5
217.29-04						
	8	16	24	4	31	4
	12	20	32	4	39	4
	17	25	42	4	49	4
	24	32	56	4	63	4
	32	40	72	4	79	4
	42	50	92	4	99	4
217/220.29-05						
	10	20	30	5	39	5
	15	25	40	5	49	5
	22	32	54	5	63	5
	25	35	60	5	69	5
	30	40	70	5	79	5
	32	42	74	5	83	5
	40	50	90	5	99	5
217/220.29I-06						
	13	25	38	6	48	6
	20	32	52	6	62	6
	23	35	58	6	68	6
	28	40	68	6	78	6
	30	42	72	6	82	6
	32	44	76	6	86	6
	28	50	88	6	98	6
	40	52	92	6	102	6
	51	63	114	6	124	6
	54	66	120	6	130	6
	63	75	138	6	148	6
	68	80	148	6	158	6
	72	84	156	6	166	6
	80	92	172	6	182	6
	100	112	212	6	222	6
	125	137	262	6	272	6

	Cutter dia Ø D_c mm	Cutter dia Ø D_{c2} mm	C min/a_p max		C max/a_p max	
			C min Ø	a_p max	C max Ø	a_p max
217/220.29-08						
	16	32	48	8	62	8
	24	40	64	8	78	8
	34	50	84	8	98	8
	36	52	88	8	102	8
	47	63	110	8	124	8
	50	66	116	8	130	8
	64	80	144	8	158	8
	68	84	152	8	166	8
	84	100	184	8	198	8
	109	125	234	8	248	8
	144	160	304	8	318	8
217/220.29-10						
	20	40	60	10	78	10
	30	50	80	10	98	10
	43	63	106	10	124	10
	50	70	120	10	138	10
	60	80	140	10	158	10
	63	83	146	10	164	10
	80	100	180	10	198	10
	105	125	230	10	248	10
	140	160	300	10	318	10
R17/220.21-LO06						
	13,3	20	33,3	0,9	38	0,9
	18,3	25	43,3	0,9	48	0,9
	20,3	27	47,3	0,9	52	0,9
	25,3	32	57,3	0,9	62	0,9
	28,3	35	63,3	0,9	68	0,9
	33,3	40	73,3	0,9	78	0,9
	35,3	42	77,3	0,9	82	0,9
	43,3	50	93,3	0,9	98	0,9
	45,3	52	97,3	0,9	102	0,9
R217.21-LP05						
	5,4	12	17,4	0,65	22	0,65
	7,4	14	21,4	0,65	26	0,65
	9,4	16	25,4	0,65	30	0,65
	11,4	18	29,4	0,65	34	0,65
	13,4	20	33,4	0,65	38	0,65
R217/220.21 LP06						
	7,5	16	23,5	0,8	30	0,8
	9,5	18	27,5	0,8	34	0,8
	11,5	20	31,5	0,8	38	0,8
	16,5	25	41,5	0,8	48	0,8
	18,5	27	45,5	0,8	52	0,8
	23,5	32	55,5	0,8	62	0,8
	26,5	35	61,5	0,8	68	0,8
	31,5	40	71,5	0,8	78	0,8
R217/220.21-Rxxx						
	9	16	25	0,6	30	0,6
	11,4	20	31	0,7/1,0*	38	0,7/1,0*
	16,4	25	41	0,7/1,5*	48	0,7/1,5*
	21	32	53	1,0/1,8*	62	1,0/1,8*
	24	35	59	1,0	82	1,0
	29	40	69	1,0/1,8*	78	1,0/1,8*
	31	42	73	1,0	82	1,0
	36	50	86	1,8	98	1,8
	38	52	90	1,8	102	1,8
	49,5	63	112	1,8	124	1,8
	52,5	66	118	1,8	130	1,8
	66,5	80	145	1,8	158	1,8
	86,5	100	185	1,8	198	1,8

*Centre cutting

Plunge milling

The insert design and the insert clamping system determines the tool's suitability for plunging.
Maximum cutting depth recommendations for suitable tools are in the tables below.
Note that the definition of a_p is different for plunge milling.
Use the cutting speeds and feed rates recommended for normal operations.

Plunging

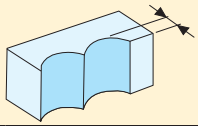

Type of cutter	a_p max mm
217/220.69-06	3,0
217/220.69-10	6
217/220.69-12	7
217/220.69-18	10
217.29-025	2,5
217/220.29-03	3
217.29-035	3,5
217/220.29-04	4
217/220.29-05	5
217/220.29-06	6
217/220.29-08	8
217/220.29-10	10
217/220.96-04	4
217/220.96-08	7,5
217/220.94-08	3,5
217/220.21-LP06	4,5
217.21-R080	5,0
217.21-R100	7,0
217/220.21-R125	9,0
217/220.21-R160	11,0

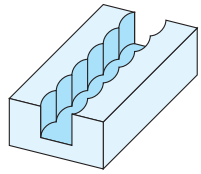

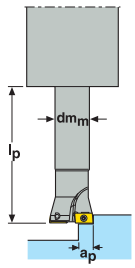

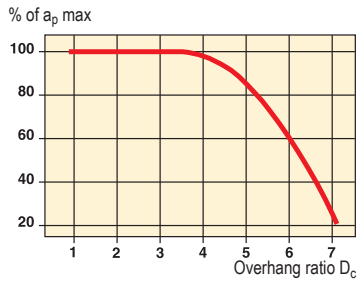

a_p max can normally be used if the overhang ratio is up to 4 but should be reduced at higher ratios as shown in the graph.

RPM

$$n = \frac{v_c \cdot 1000}{\pi \cdot D_c} \quad \text{(rev/min)}$$

Cutting speed

$$v_c = \frac{n \cdot \pi \cdot D_c}{1000} \quad \text{(m/min)}$$

Feed speed

$$v_f = n \cdot z_n \cdot f_z \quad \text{(mm/min)}$$

$$v_f = n \cdot z_c \cdot f_z \quad \text{(mm/min)}$$

Feed per revolution

$$f = z_n \cdot f_z \quad \text{(mm/rev)}$$

$$f = z_c \cdot f_z \quad \text{(mm/rev)}$$

Metal removal rate

$$Q = \frac{a_e \cdot a_p \cdot v_f}{1000} \quad \text{(cm3/min)}$$

Cutting speed and RPM for copying

$$v_c = \frac{n \cdot \pi \cdot D_w}{1000} \quad \text{(m/min)}$$

$$D_w = 2 \cdot \sqrt{a_p (D_c - a_p)} \quad \text{(mm)}$$

$$n = \frac{v_c \cdot 1000}{\pi \cdot D_w} \quad \text{(RPM)}$$

Effective No. of teeth (Z_c)
The effective No. of teeth (Z_c) is used to calculate the feed speed (v_f) and the feed per revolution (f). For most of the cutters the effective No. of teeth (Z_c) is equal to the No. of teeth in the cutter (zn), but for some of the cutters Z_c is less than Z_n.

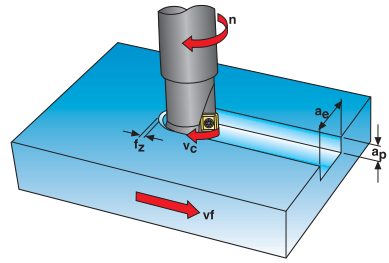

a_e	=	Width of cut mm/radial depth of cut	mm
a_p	=	Depth of cut mm/axial depth of cut	mm
D_c	=	Cutter diameter	mm
f	=	Feed per revolution	mm/rev
f_z	=	Feed per tooth	mm/tooth
Z_c	=	Effective No. of teeth for calculation of feed speed or feed per rev (see below)	
n	=	RPM	rev/min
Q	=	Material removal rate	cm3/min
V_c	=	Cutting speed	m/min
v_f	=	Feed speed	mm/min

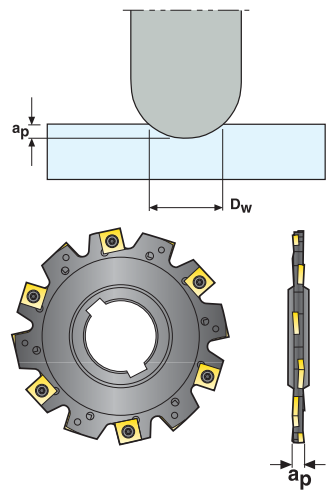

Example: Disc mill 335.19
Total No. of teeth (Z_n) = 12 Effective No. of teeth (Z_c) = 6
Explanation: 6 inserts on one side of the cutter and 6 overlapping inserts on the other side are used to get the full width (a_p) ,which means Z_c = 6.

Internal circular interpolation
When using circular interpolation or helical interpolation ramping to increase the diameter of a hole in a workpiece, the stock removal depth is not the same as the width of cut value. The real width of cut must be calculated from the formula below. The width of cut value is then used for calculation of feed/tooth and feed speed.

$$a_e = \frac{D_o^2 - D_i^2}{4\,(D_o - D_c)}$$

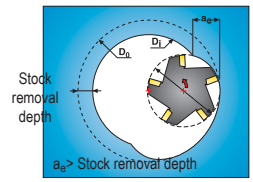

External circular interpolation
When using external circular interpolation or helical interpolation ramping to decrease the diameter of a round workpiece the stock removal depth is not the same as the width of cut value. The real width of cut must be calculated from the formula below.

The width of cut is then used for calculation of feed/tooth and feed speed.

$$a_e = \frac{D_o^2 - D_i^2}{4\,(D_i + D_c)}$$

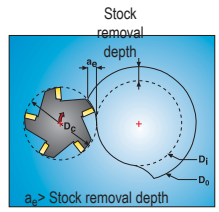

Increase the width of cut successively to full value
For circular interpolation operations it is recommended to successively increase the width of cut up to full value. When using radial infeed up to full width of cut, reduce the feed/tooth and feed speed to half.

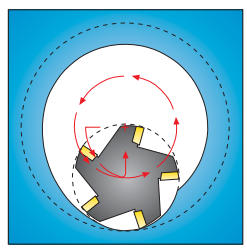

Successive increase of width of cut – recommended method.

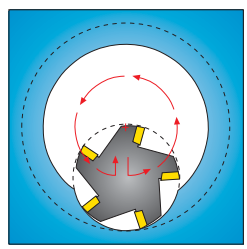

Radial infeed – Reduce feed/tooth.

Feed speed related to the centre of the cutter
When calculating feed speed and feed/tooth from average chip thickness using circular interpolation or helical interpolation ramping in an operation, the feed speed and feed/tooth are always related to the centre and not to the periphery of the cutter.

$$v_f = \frac{(D_0 - D_c) \cdot n \cdot z_c \cdot f_z}{D_0}$$

$$v_f = \frac{(D_i + D_c) \cdot n \cdot z_c \cdot f_z}{D_i}$$

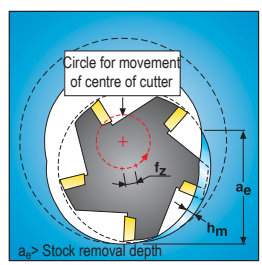

Slot milling compared with side milling

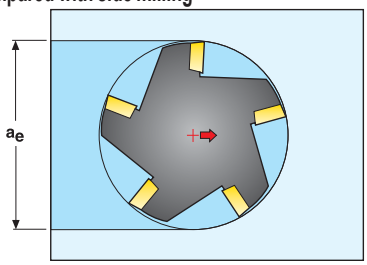

Slot milling

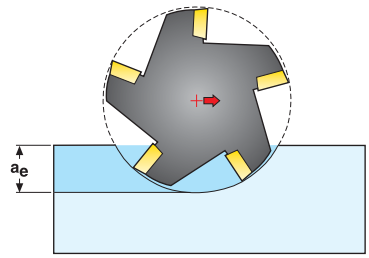

Side milling

Relative engagement of the cutter diameter (a_e/D_c=%)	Multiply the feed per tooth by the following factor
30%	1.25
20%	1.5
10%	2.0
5%	3.0

Calculation of feed per tooth and cutting speed for side milling operations

When using side milling it is necessary to increase the feed per tooth to keep the chip thickness at the same value.
It is also possible to increase the cutting speed and keep the same tool life. Use the tables below.

This table can be used for cutters with cutting edge angle = 90º

a_e/D_c %	Feed Per Tooth, mm/tooth (fz)													Speed Factor
	0,03	0,06	0,08	0,10	0,15	0,20	0,25	0,30	0,40	0,50	0,60	0,80	1,00	
	Average Chip Thickness, mm/tooth (hm)													
Width of cut up to and including Dc/2														
2 (0.02)					0,02	0,03	0,04	0,04	0,06	0,07	0,08	0,11	0,14	1.8
3 (0.03)				0,02	0,03	0,03	0,04	0,05	0,07	0,09	0,10	0,14	0,17	1.7
5 (0.05)			0,02	0,02	0,03	0,04	0,06	0,07	0,09	0,11	0,13	0,18	0,22	1.6
10 (0.10)		0,02	0,02	0,03	0,05	0,06	0,08	0,09	0,12	0,16	0,19	0,25	0,31	1.5
15 (0.15)	0,011	0,02	0,03	0,04	0,06	0,08	0,09	0,11	0,15	0,19	0,23	0,30		1.4
20 (0.20)	0,013	0,03	0,03	0,04	0,06	0,09	0,11	0,13	0,17	0,22	0,26			1.35
30 (0.30)	0,016	0,03	0,04	0,05	0,08	0,10	0,13	0,16	0,21	0,26	0,31			1.3
40 (0.40)	0,018	0,04	0,05	0,06	0,09	0,12	0,15	0,18	0,23	0,29				1.25
50 (0.50)	0,02	0,04	0,05	0,06	0,10	0,13	0,16	0,19	0,25	0,32				1.2
Slotting (Width of cut = Dc)														
100 (1.00)	0,02	0,04	0,05	0,06	0,10	0,13	0,16	0,19	0,25	0,32				1.0

= Feed per tooth correction example: at 20% engagement also increase speed by 1.35

Instead of using the table above for calculating hm and fz, the following formula could be used if a_e/D_c < 30%.

$$h_m = f_z \cdot \sqrt{\frac{a_e}{D_c}}$$

$$f_z = h_m \cdot \sqrt{\frac{D_c}{a_e}}$$

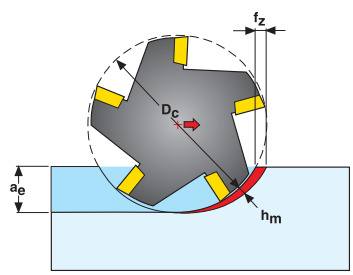

This table can be used for cutters with cutting edge angle = 45º

a_e/D_c %	Feed Per Tooth, mm/tooth (f_z)													Speed Factor
	0,03	0,06	0,08	0,10	0,15	0,20	0,25	0,30	0,40	0,50	0,60	0,80	1,00	
	Average Chip Thickness, mm/tooth (hm)													
Width of cut up to and including $D_c/2$														
2 (0.02)					0,01	0,02	0,02	0,03	0,04	0,05	0,06	0,08	0,10	1.8
3 (0.03)				0,01	0,02	0,02	0,03	0,04	0,05	0,06	0,07	0,10	0,12	1.7
5 (0.05)			0,01	0,02	0,02	0,03	0,04	0,05	0,06	0,08	0,09	0,13	0,16	1.6
10 (0.10)		0,01	0,02	0,02	0,03	0,04	0,05	0,07	0,09	0,11	0,13	0,18	0,22	1.5
15 (0.15)	0,008	0,02	0,02	0,03	0,04	0,05	0,07	0,08	0,11	0,13	0,16	0,21		1.4
20 (0.20)	0,009	0,02	0,02	0,03	0,05	0,06	0,08	0,09	0,12	0,15	0,18			1.35
30 (0.30)	0,011	0,02	0,03	0,04	0,05	0,07	0,09	0,11	0,15	0,18	0,22			1.3
40 (0.40)	0,012	0,02	0,03	0,04	0,06	0,08	0,10	0,12	0,17	0,21				1.25
50 (0.50)	0,01	0,03	0,04	0,05	0,07	0,09	0,11	0,14	0,18	0,23				1.2
Face milling full engagement (Width of cut = D_c)														
100 (1.00)	0,02	0,04	0,05	0,06	0,10	0,13	0,16	0,19	0,25	0,32				1.0

Calculation of feed per tooth and cutting speed for side milling operations

When using side milling it is necessary to increase the feed per tooth to keep the chip thickness at the same value.
It is also possible to increase the cutting speed and keep the same tool life. Use the tables below.

This table can be used for cutters with cutting edge angle = 60º

a_e/D_c %	Feed Per Tooth, mm/tooth (f_z)													Speed Factor
	0,03	0,06	0,08	0,10	0,15	0,20	0,25	0,30	0,40	0,50	0,60	0,80	1,00	
	Average Chip Thickness, mm/tooth (hm)													
Width of cut up to and including $D_c/2$														
2 (0.02)					0,02	0,02	0,03	0,04	0,05	0,06	0,07	0,10	0,12	1.8
3 (0.03)				0,01	0,02	0,03	0,04	0,04	0,06	0,07	0,09	0,12	0,15	1.7
5 (0.05)			0,02	0,02	0,03	0,04	0,05	0,06	0,08	0,10	0,12	0,15	0,19	1.6
10 (0.10)		0,02	0,02	0,03	0,04	0,05	0,07	0,08	0,11	0,13	0,16	0,22	0,27	1.5
15 (0.15)	0,010	0,02	0,03	0,03	0,05	0,07	0,08	0,10	0,13	0,16	0,20	0,26		1.4
20 (0.20)	0,011	0,02	0,03	0,04	0,06	0,07	0,09	0,11	0,15	0,19	0,22			1.35
30 (0.30)	0,013	0,03	0,04	0,04	0,07	0,08	0,11	0,13	0,18	0,22	0,27			1.3
40 (0.40)	0,015	0,03	0,04	0,05	0,08	0,10	0,13	0,15	0,20	0,25				1.25
50 (0.50)	0,02	0,03	0,04	0,06	0,08	0,11	0,14	0,17	0,22	0,28				1.2
Face milling full engagement (Width of cut = D_c)														
100 (1.00)	0,02	0,04	0,05	0,06	0,10	0,13	0,16	0,19	0,25	0,32				1.0

Instead of using the table above for calculating hm and fz, the following formula could be used if a_e/D_c < 30%.

$$h_m = f_z \cdot \sqrt{\frac{a_e}{D_c}} \cdot \sin \kappa$$

$$f_z = h_m \cdot \sqrt{\frac{D_c}{a_e}} \cdot \frac{1}{\sin \kappa}$$

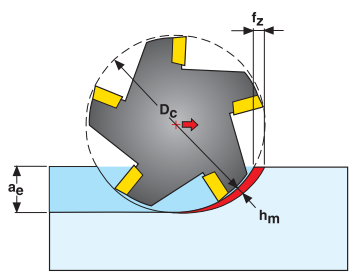

Vibrations

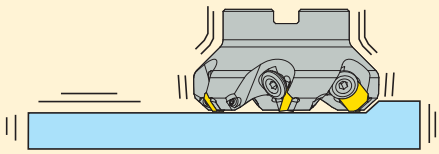

- Improve the stability of cutter and workpiece.
- Change cutter positioning.
- Minimize tool overhang.
- Reduce the cutting speed.
- Increase the feed rate.
- Reduce the depth of cut.
- Select a different insert geometriy, see page Insert geometry
- Use Steadyline antivibration bar

Poor surface finish

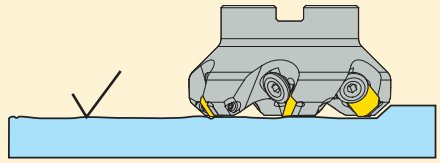

- Improve the stability of cutter and workpiece.
- Minimize tool overhang.
- Reduce the feed rate.
- Incease the cutting speed
- Use coolant.
- Use wiper inserts.
- Keep feed/rev value within wiper width
- Use Steadyline antivibration bar

Tool life problems

Rapid flank wear

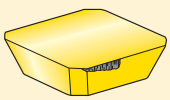

- Reduce the cutting speed.
- Increase the feed rate.
- Climb milling.

Rapid notch wear

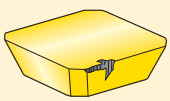

- Reduce the cutting speed.
- Increase the feed rate.
- Increase the depth of cut.
- Climb milling.
- Change cutter positioning

Chipping

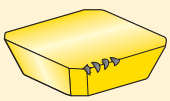

- Increase the cutting speed.
- reduce the feed rate.
- Conventional milling.
- Improve chip evacuation.
- Change cutter positioning.
- Minimize tool overhang.
- Improve stability.

Rapid flank wear

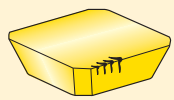

- Reduce the cutting speed.
- Reduce the feed rate.
- No coolant
- Change cutter positioning.

Rapid notch wear

- Increase the cutting speed.
- Increase the feed rate
- No coolant.
- Climb milling.
- Change cutter positioning

Torque information and dimension of mounting

The range of Torque keys with fixed torque values are available in combinations of key grip/torque value for insert locking for most of the Seco milling products. By using a Torque key you always ensure the correct tightening force when mounting the insert.
Torque keys are calibrated according to ISO 6789.

Code key: T00-15P35

T00 = Torque screw driver type for Torx Plus blade
T00T= Torque T-handle type for Torx Plus blade
H00T= Torque T-handle type for hexagonal blade

15P= Torx Plus size
35 = Torque value 3,5 Nm

Please observe that blades are not interchangeable between screw driver type and T-handle type.
Torx Plus® is a registered trade mark belonging to Camcar-Textron (USA)

Torque key*	Replaceable blade	Torx Plus size	Torque value
T00-06P05	T00-06P	T06P	0,5 Nm
T00-07P09	T00-07P	T07P	0,9 Nm
T00-07P12	T00-07P	T07P	1,2 Nm
T00-08P12	T00-08P	T08P	1,2 Nm
T00-09P12	T00-09P	T09P	1,2 Nm
T00-09P20	T00-09P	T09P	2,0 Nm
T00-10P20	T00-10P	T10P	2,0 Nm
T00-10P30	T00-10P	T10P	3,0 Nm
T00-15P20	T00-15P	T15P	2,0 Nm
T00-15P30	T00-15P	T15P	3,0 Nm
T00-15P35	T00-15P	T15P	3,5 Nm
T00-15P50	T00-15P	T15P	5,0 Nm
T00-20P50	T00-20P	T20P	5,0 Nm

Torque key*	Replaceable blade	Torx Plus size	Torque value	Hexagonial size
T00T-15P50	T00T-15P	T15P	5,0 Nm	–
T00T-20P50	T00T-20P	T20P	5,0 Nm	–
T00T-20P80	T00T-20P	T20P	8,0 Nm	–
T00T-25P60	T00T-25P	T25P	6,0 Nm	–
T00T-25P80	T00T-25P	T25P	8,0 Nm	–
T00T-30P80	T00T-30P	T30P	8,0 Nm	–
H00T-3050	H00T-3.0	–	5,0 Nm	3 mm
H00T-4050	H00T-4.0	–	5,0 Nm	4 mm
H00T-4060	H00T-4.0	–	6,0 Nm	4 mm
H00T-5080	H00T-5.0	–	8,0 Nm	5 mm
H00T-60100	H00T-6.0	–	10,0 Nm	6 mm

*Including blade

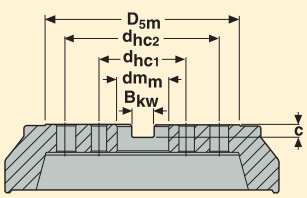

Dimensions in mm						spindle-nose
D_{5m}	Dm_m	B_{kw}	c	d_{hc1}	d_{hc2}	
30-35	16	8,4	5,6	–	–	–
42-47	22	10,4	6.3	–	–	–
48-62	27	12,4	7	–	–	–
60-90	32	14,4	8	–	–	–
90-130	40	16,4	9	66,7	–	(8xxx)
130-270	60	25,7	14	101,6	177,8	(8xxx)

SMG version 2 – Introduction

The foundation for SMG v2 is a classification of workpiece materials based on their type rather than their relative machinability and consequently it contains workpiece materials like composites. It is comprehensive enough, but still easy to identify to which SMG a particular material belongs.

Each SMG has a specific material standard in a specific condition assigned as reference to allow easy adjustment of cutting data for any actual material compared to any Seco reference material see page xxx.

As example the reference materials EN C45E for SMG P4 and EN 42 CrMo 4 for both SMG P5 and SMG H5 see further details in the following tables.

In SMG v2 classification of workpiece materials involves a specific material standard in a specific condition assigned as reference for easy and unambigious adjustment of cutting data for any actual material compared to any Seco reference material. As examples the reference materials EN C45E for SMG P4 and EN 42 CrMo 4 for both SMG P5 and SMG H5 shown below in table 1 where the reference level material property is indicated.

SMG	Description	Properties	Reference
P4	Low alloy general structural steels, 0.25% < C < 0.67%wt Low alloy Quench & Temper steels	520 < R_m < 1200	C 45E R_m = 660 N/mm^2
P5	Structural steels, 0.25% < C < 0.67%wt Quench & Temper steels	550 < R_m < 1200	42 CrMo 4 R_m = 700 N/mm^2

SMG	Description	Properties	Reference
H5	Quenched & Tempered steels	38 < HRC < 56	42 CrMo 4 50 HRC

Focusing specifically on EN 42 CrMo 4 in annealed condition, the ultimate tensile strength R_m may typically vary between Rm = 630 N/mm^2 and R_m = 780 N/mm^2, which provide a reference level for SMG P5. In Quenched & Tempered condition, the ultimate tensile strength R_m may typically be between R_m = 900 N/mm^2 and R_m = 1100 N/mm^2 thus still belongs to SMG P5. However, if hardened above R_m = 1200 N/mm^2 it now belongs to SMG H5.

SMG	EN	W.-Nr	AFNOR	BS	UNI	JIS	AISI / ASTM	GOST	Condition	R_{m_nom}	HRC_{nom}
P5	42 CrMo 4	1.1201	42 CD 4	708 M 40	42 CrMo 4	SCM 440 (H)	4142, 4140	38HM	Annealed	700	
	42 CrMo 4	1.1201	42 CD 4	708 M 40	42 CrMo 4	SCM 440 (H)	4142, 4140	38HM	Quenched & Tempered	1000	
H5	42 CrMo 4	1.1201	42 CD 4	708 M 40	42 CrMo 4	SCM 440 (H)	4142, 4140	38HM	Quenched & Tempered		45
	42 CrMo 4	1.1201	42 CD 4	708 M 40	42 CrMo 4	SCM 440 (H)	4142, 4140	38HM	Quenched & Tempered		50

The EN 42CrMo4 quench & tempered steel could be used to illustrate the machinability dependence of materials' condition.

The graphs below indicate how speed recommendations for a nominal material conditions may be adjusted for relative R_m (left diagram valid for ISO-P) and for relative HRC (valid for ISO-H).

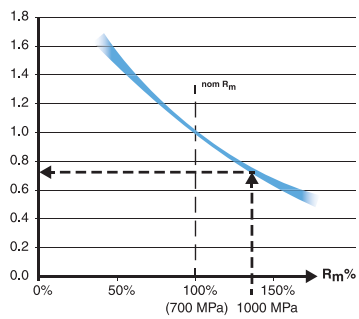

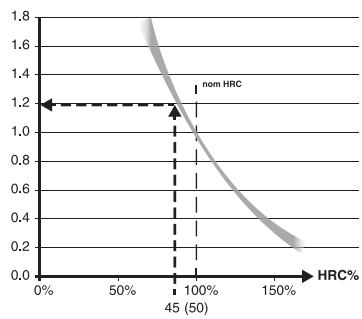

To further illustrate how the SMG v2 SMG P5 nominal v_c can be adjusted to a more accurate recommended v_c we need ultimate tensile strength R_m data and in this case we use the EN 42 CrMo 4 quenched & tempered to R_m = 1000 N/mm^2 according to above table (bold blue arrows).

Assume that we find that the SMG P5 nominal v_c = 280 m/min for a certain product and machining.

Then, actual recommended v_c = 280 m/min x 0,75 = 210 m/min.

Consequently in the SMG H5 the nominal v_c can be adjusted using the hardened EN 42 CrMo 4 at HRC 45 (smaller grey arrows).

Assume that the SMG H5 nominal v_c = 50 m/min for a certain product and machining using a coated cemented carbide tool then, actual recommended v_c = 50 m/min x 1,2 = 60 m/min.

Note that when using PCBN tools cutting data recommendation starts at page xxx.

For further workpiece material details please see page(s) xxx and suggested cutting data at applicable pages.

For more convenient cutting data handling we recommend applicable tools in My Pages – Suggest on www.secotools.com

Steels, ferritic and martensitic stainless steels

SMG	Description	Properties	Reference
P1	Free-cutting steels	$360 < R_m < 880$	11 SMn30 $R_m = 385$ N/mm^2
P2	Low alloy ferritic steels, C < 0.25%wt Low alloy weldable general structural steels	$320 < R_m < 600$	S235JRG2 $R_m = 420$ N/mm^2
P3	Ferritic & ferritic/pearlitic steels, C < 0.25%wt Weldable general structural steels Case hardening steels	$430 < R_m < 610$	16 MnCr 5 $R_m = 550$ N/mm^2
P4	Low alloy general structural steels, 0.25% < C < 0.67%wt Low alloy Quench & Temper steels	$520 < R_m < 1200$	C 45E $R_m = 660$ N/mm^2
P5	Structural steels, 0.25% < C < 0.67%wt Quench & Temper steels	$550 < R_m < 1200$	42 CrMo 4 $R_m = 700$ N/mm^2
P6	Low alloy through hardening steels, C > 0.67%wt Low alloy spring and bearing steels	$520 < R_m < 1200$	C 100S $R_m = 600$ N/mm^2
P7	Through hardening steels, C > 0.67%wt Spring and bearing steels	$600 < R_m < 1200$	100 Cr 6 $R_m = 650$ N/mm^2
P8	Tool steels High Speed Steels (HSS)	$600 < R_m < 1200$	X 40 CrMoV 5 1 $R_m = 700$ N/mm^2
P11	Ferritic & martensitic stainless steels	$415 < R_m < 1200$	X 20 Cr 13 $R_m = 675$ N/mm^2

Free-cutting, austenitic and duplex stainless steels

SMG	Description	Properties	Reference
M1	Free-cutting austenitic stainless steels		X 10 CrNiS 18 9
M2	Low alloy austenitic stainless steels		X 5 CrNi 18 9
M3	Medium alloy austenitic stainless steels		X 2 CrNiMo 18 14 3
M4	High alloy austenitic and duplex stainless steels		X 2 CrNiMoN 22 5 3
M5	Difficult high alloy austenitic and duplex stainless steels		X 2 CrNiMoN 25 7 4

Workpiece materials – Classification, SMG (ver. 2)

Cast irons

SMG	Description	Properties	Reference
K1	Grey cast irons (GCI)		EN-GJL-250
K2	Compacted graphite irons (CGI)		EN-GJV-400
K3	Malleable cast irons (MCI)		EN-GJMB-550-4
K4	Nodular cast irons (SGI)		EN-GJS-500-7
K5	Austempered ductile irons (ADI)		EN-GJS-1000-5
K6	Austenitic lamellar cast irons		EN-GJLA-XNiCuCr15-6-2
K7	Austenitic nodular cast irons		EN-GJSA-XNiMn23-4

Non-ferrous metals

SMG	Description	Properties	Reference
N1	Aluminium alloys, Si < 9%		AW-7075
N2	Aluminium alloys, 9% < Si < 16%		AC-44200 Si = 12%
N3	Aluminium alloys, Si >16%		AlSi17Cu5
N11	Copper alloys		CW614N

Superalloys and titanium

SMG	Description	Properties	Reference
S1	Iron based superalloys		Discalloy
S2	Cobalt based superalloys		Stellite 21
S3	Nickel based superalloys		Inconel 718
S11	Titanium, low alloyed, (α)		Ti
S12	Titanium, medium alloyed, (α+β)		TiAl6V4
S13	Titanium, high alloyed, (near β and β)		Ti10V2Fe3Al

Hard materials

SMG	Description	Properties	Reference
H3	Case hardened steels	58 < HRC < 62	16 MnCr 5 60 HRC
H5	Quenched & Tempered steels	38 < HRC < 56	42 CrMo 4 50 HRC
H7	Quenched & Tempered steels Bearing steels	56 < HRC < 64	100 Cr 6 60 HRC
H8	Tool steels High Speed Steels	38 < HRC < 64	X 40 CrMoV 5 1 50 HRC
H11	Martensitic stainless steels	38 < HRC < 50	X 20 Cr 13 45 HRC
H12	Precipitation hardened stainless steels	33 < HRC < 50	X 5 CrNiCuNb 16 4 35 HRC
H21	Manganese steels	23 < HRC < 64	X 120 Mn 12 50 HRC
H31	White cast irons	50 < HRC < 64	EN-GJN-HV600(XCr11) 55 HRC

Other difficult materials

SMG	Description	Properties	Reference
PM1	Low alloy PM materials		F-0008 Fe-0.7C
PM2	Medium alloy PM materials		FLC-4608 Fe2Cu1.8Ni0.5Mo0.2Mn0.8C
PM3	High alloy PM materials Exhaust valve seat materials		
HF1	Hard facing alloys Welded or plasma deposited iron based alloys		
HF2	Hard facing alloys Welded or plasma deposited cubalt and nickel based alloys		
CC1	Sintered tungsten carbide, Co >13%		G50

Plastics and Composites

SMG	Description	Properties	Reference
TS1	Thermosetting polymers		Urea formaldehyde (UF)
TS2	Thermosetting Carbon fibre composites		T300 T700 T800 HTA-S IMA - Epoxy (M21)...
TS3	Thermosetting Glass fibre composites		Epoxy - HX..(42..)/E glass (7781...)...
TS4	Thermosetting Aramide fibre composites		Kevlar 49
TP1	Thermoplastic polymers		Polycarbonate (PC)
TP2	Thermoplastic Carbon fibre composites		PPS/PEEK - T300..
TP3	Thermoplastic Glass fibre composites		PPS/PEEK - E glass or A glass...
TP4	Thermoplastic Aramide fibre composites		

Graphite

SMG	Description	Properties	Reference
GR1	Graphite		R 8500

SMG

SMG	EN	EN-Nr	W.-Nr	DIN	AFNOR	BS	UNI	JIS	SS	UNS
	11 SMn30	1.0715	1.0715	9 SMn 28	S 250	230 M 07	CF 9 SMn 28	SUM 22	1912	G12130
	11 SMnPb30	1.0718	1.0718	9 SMnPb 28	S 250 Pb		CF 9 SMnPb 28	SUM 22 L	1914	G12134
	10 S 20	1.0721	1.0721	10 S 20	10 F 1	210 M 15	CF 10 S 20			
			1.0722	10 SPb 20	10 PbF 2		CF 10 SPb 20			
P1	15 SMn13	1.0725	1.0723	15 S 20		210 A 15		SUM 32	1922	
	35 S20	1.0726	1.0726	35 S 20	35 MF 4	212 M 36			1957	G11400
	46 S20	1.0727	1.0727	46 S 20	45 MF 4	212 M 44			1973	G11460
	11 SMn37	1.0736	1.0736	9 SMn 36	S 300	240 M 07	CF 9 SMn 36			G12150
	11 SMnPb 37	1.0737	1.0737	9 SMnPb 36	S 300 Pb		CF 9 SMnPb 36		1926	G12144
	S235JR	1.0037	1.0037	St 37-2	E 24-2		Fe 360 B	STKM 12 C	1311	
	S235JRG2	1.0038	1.0116	St 37-3	E 24-3, E 24-4	4360-40 C	Fe 360 D FF		1312, 1313	
	S275J2G3	1.0144	1.0144	St 44-3 N	E 28-3, E 28-4	4360-43 C	Fe 430 D FF	SM 41 C	1412, 1414	
	C 10	1.0301	1.0301	C 10	AF 34 C 10, XC 10	045 M 10	C 10	S 10 C		G10100
P2			1.0401	C 15	AF3 7 C 12, XC 18	080 M 15	C 15, C 16		1350	G10170
	C22+N	1.0402	1.0402	C 22	C 20	050 A 20	C 20, C 21		1450	G10200
	S355JR	1.0570	1.0570	St 52-3	E 36-3, E 36-4	4360-50 C	Fe 510 B	SM 50 YA	2172, 2132	
	C 15R	1.1141	1.1141	Ck 15	XC 15, XC 18	080 M 15	C 15, C 16	S 15 C, S 15 CK	1370	G10170
			1.1158	Ck 25	XC 25	060 A 25	C 25	S 25 C		G10250
			1.2162	21 MnCr 5	20 NC 5			SCR 420 H		
	16 Mo 3	1.5415	1.5415	15 Mo 3	15 D 3	1501-240	16 Mo 3		2912	
			1.5423	16 Mo 5		1503-245-420	16 Mo 5	SB 450 M		G45200
	14 NiCr 14	1.5752	1.5752	14 NiCr 14	12 NC 15	655 M 13		SNC 815 (H)		G33106
			1.5919	15 CrNi 6	16 NC 6	S 107	16 CrNi 4			
	18 NiCrMo 7 6	1.6587	1.6587	18 CrNiMo 7 6	18 NCD 6	820 A 16	18 NiCrMo 7			
P3	16 MnCr 5	1.7131	1.7131	16 MnCr 5	16 MC 5	527 M 17	16 MnCr 5	SCR 415	2511	G51170
	16 MnCrS 5	1.7139	1.7139	16 MnCrS 5						
	20 MnCr 5	1.7147	1.7147	20 MnCr 5	20 MC 5		20 MnCr 5	SMnC 420 (H)		G51200
	20 MnCrS 5	1.7149	1.7149	20 MnCrS 5	20 MnCrS 5			SMnC 21 H		
	13 CrMo 4 5	1.7335	1.7335	13 CrMo 4 4	15 CD 3.5	1501-620 Gr. 27	14 CrMo 4 5		2216	
			1.7337	16 CrMo 4 4	15 CD 4.5	1501-620 Gr. 27	14 CrMo 4 5		2216	
	10 CrMo 9 10	1.7380	1.7380	10 CrMo 9 10	10 CD 9.10	1501-622 Gr. 31	12 CrMo 9 10		2218	J21890
	C35+N		1.0501	C 35	AF 55 C 35	060 A 35	C 35		1550	G10350
	E 335	1.0503	1.0503	C 45	AF 65 C 45	80 M 46	C 45	S 45 C	1650	G10430
	C40+N		1.0511	C 40	AF 60 C 40	080 M 40	C 40	S 40 C		
	E 360	1.0070	1.0535	St 70-2	A 70-2		Fe 690		1655	
	C60+N	1.0601	1.0601	C 60	CC 55	080 A 62	C 60			G10600
P4			1.1157	40 Mn 4	35 M 5	150 M 36				G10390
	G 28 Mn6	1.1165	1.1165	30 Mn 5		120 M 36		SMn 1 H, SCMn 2		G13300
	G 28 Mn6+QT	1.1165	1.1167	36 Mn 5	40 M 5	150 M 36		SMn 438 (H), SCMn 3	2120	G13350
	C 35E	1.1181	1.1181	Ck 35	XC 38 H1	080 M 36	C 35	S 35 C	1572	G10340
	C 45E	1.1191	1.1191	Ck 45	XC 42	080 M 46	C 45	S 45 C	1672	G10420
	C 60E	1.1221	1.1221	Ck 60	XC 60	080 A 62	C 60	S 58 C	1665, 1678	G10640
			1.1740	C 60 W	Y3 55			SK 7		
	55 SiCr7	1.7100	1.0904	55 Si 7	55 S 7	250 A 53	55 Si 8		2085, 2090	
	42 CrMo 4	1.7225	1.1201	42 CrMo 4	42 CD 4	708 M 40	42 CrMo 4	SCM 440 (H)	2244	G41400
	42 CrMo 4	1.7225	1.1201	42 CrMo 4	42 CD 4	708 M 40	42 CrMo 4	SCM 440 (H)	2244	G41400
			1.2330	35 CrMo 4	34 CD 4	708 A 37	35 CrMo 4		2234	T51620
			1.2542	45 WCrV 7		BS 1	45 WCrV 8 KU		2710	T41901
		1.2714	1.2714	56 NiCrMoV 7		BH 224-5	56 NiCrMoV7-KU	SKT 4		T61206
			1.5121	46 MnSi 4						
			1.5710	36 NiCr 6	35 NC 6	640 A 35		SNC 236		
P5			1.5736	36 NiCr 10	35 NC 11		35 NiCr 9	SNC 631 (H)		
	36CrNiMo4+TA		1.6511	36 CrNiMo 4	40 NCD 3	816 M 40	38 NiCrMo 4 (KB)			G98400
	34 CrNiMo 6	1.6582	1.6582	34 CrNiMo 6	35 NCD 6	817 M 40	35 NiCrMo 6 (KW)	SNCM 447	2541	
	34 Cr 4	1.7033	1.7033	34 Cr 4	32 C 4	530 A 32	34 Cr 4 (KB)	SCr 430 (H)		G51320
	41 Cr 4	1.7035	1.7035	41 Cr 4	42 C 4	530 M 40	41 Cr 4	SCr 440 (H)		G51400
	25 CrMo 4	1.7218	1.7218	25 CrMo 4	25 CD 4 S	708 M 25	25 CrMo 4 (KB)	SCM 425	2225	G41300
			1.7361	32 CrMo 12	30 CD 12	722 M 24	32 CrMo 12		2240	
	50 CrV 4	1.8159	1.8159	50 CrV 4	50 CV 4	735 A 50	51 CrV 4	SUP 10	2230	H61500
	41 CrAlMo 7 10	1.8509	1.8509	41 CrAlMo 7	40 CAD 6.12	905 M 39	41 CrAlMo 7	SACM 645	2940	K24065
	C 67S	1.1231	1.1231	Ck 67	XC 68	060 A 67	C 70		1770	G10700
	C 100S	1.1274	1.1274	Ck 101		060 A 96		SUP 4	1870	G10950
P6	C 105U	1.1545	1.1545	C 105 W1	Y1 105		C 100 KU		1880	
			1.1645	C 105 W2	Y1 105		C 100 KU	SK 3		
			1.1663	C 125 W	Y2 120		C 120 KU	SK 2		

SMG

U.N.E./ I.H.A.	AISI / ASTM	GOST	Misc. Brands	Condition	Structure
	1213			Annealed	
	12 L 13			Annealed	
	1108			Annealed	
	11 L 08			Annealed	
				Annealed	
	1140	40		Annealed	
	1146			Annealed	
	1215			Annealed	
	12 L 14			Annealed	
		16D		Annealed	
	A 573 Gr. 58	18kp		Annealed	
	A 573 Gr. 70	St14kP		Annealed	
	1010	10		Annealed	
F.1110	1015	15		Annealed	
	1023	20		Annealed	
		17G1S		Annealed	
F.1511	1015	15		Annealed	
F.1120	1025	25		Annealed	
				Annealed	
	A 204 Gr. A			Annealed	
	4520			Annealed	
	3310, 9314	20X2H4A		Annealed	
	4320			Annealed	
				Annealed	
F.1516	5115	12KHN2		Annealed	
		18HG		Annealed	
	5120	20KH		Annealed	
	5120 H	20KH		Annealed	
	A 182-F11, F12	12KHM		Annealed	
	A 387 Gr. 12 Cl. 2			Annealed	
F.155	A 182-F22	12KH8		Annealed	
F.1130	1035	35		Annealed	
F.5110	1045	45		Annealed	
	1040	40		Annealed	
F.1150	1055	55		Annealed	
	1060	60		Annealed	
	1039	40G		Annealed	
	1330	30G2		Annealed	
F.411	1335	35G2		Annealed	
F.1135	1035	35		Annealed	
F.1140	1045	45		Annealed	
F.1150	1064	60		Annealed	
	1060	60		Annealed	
F.144	9255	55S2		Annealed	
F.1252	4142, 4140	38HM		Annealed	
F.1252	4142, 4140	38HM		Quenched & Tempered	
F.1250	4135	35KHM		Annealed	
F.5241	S1	5KHV2S		Annealed	
	L6	5KHNV		Annealed	
	5045			Annealed	
	3135			Quenched & Tempered	
	3435			Annealed	
	9840			Quenched & Tempered	
F.1280	4340	38H2N2MA		Annealed	
	5132	35KH		Quenched & Tempered	
	5140	40H		Quenched & Tempered	
F.1251	4130	20KHM		Quenched & Tempered	
				Quenched & Tempered	
F.143	6150	50KHFA		Quenched & Tempered	
F.1740	A 355 Cl. A			Annealed	
F.5103	1070	70		Annealed	
F.5117	1095			Annealed	
F.5118	W1	U10A		Annealed	
		U10		Annealed	
	W1	U13		Annealed	

SMG

SMG	EN	EN-Nr	W.-Nr	DIN	AFNOR	BS	UNI	JIS	SS	UNS
P7	107 CrV 3	1.2210	1.2210	115 CrV 3	100 C 3		107 CrV 3 KU			T61202
			1.2510	100 MnCrW 4	90 MWCV 5	BO 1	95 MnWCr 5 KU	SKS 3	2140	T31501
	90 MnCrV 8	1.2842	1.2842	90 MnCrV 8	90 MV 8	BO 2	90 MnVCr 8 KU			T31502
	100 Cr 6	1.3505	1.3505	100 Cr 6	100 C 6	534 A 99	100 Cr 6	SUJ 2	2258	G51986
P8	X 210 Cr 12	1.2080	1.2080	X 210 Cr 12	Z 200 C 12	BD 3	X 210 Cr 13 KU	SKD 1		T30403
			1.2343	X 38 CrMoV 5 1	Z 38 CDV 5	BH 11	X 37 CrMoV 5 1 KU	SKD 6		T20811
	X 40 CrMoV 5 1	1.2344	1.2344	X 40 CrMoV 5 1	Z 40 CDV 5	BH 13	X 40 CrMo 5 1 1 KU	SKD 61	2242	T20813
	X 100 CrMoV 5	1.2363	1.2363	X 100 CrMoV 5 1	Z 100 CDV 5	BA 2	X 100 CrMoV 5 1 KU	SKD 12	2260	T30102
			1.2365	X 32 CrMoV 3 3	32 DCV 28	BH 10	30 CrMoV 12 27 KU	SKD 7		T20810
			1.2436	X 210 CrW 12			X 215 CrW 12 1 KU	SKD 2	2312	
			1.2601	X 165 CrMoV 12			X 165 CrMoW 12 KU		2310	
			1.2713	55 NiCrMoV 6	55 NCDV 7			SKT 4		T61206
	HS 6-5-2-5	1.3243	1.3243	S 6-5-2-5	Z 85 WDKCV 06-05-05-04-02		HS 6-5-2-5	SKH 55	2723	
	HS 2-10-1-8	1.3247	1.3247	S 2-10-1-8	Z 110 DKCWV 09-08-04	BM 42	HS 2-9-1-8	SKH 51		T11342
	HS 18-1-2-5	1.3255	1.3255	S 18-1-2-5	Z 80 WKCV 18-05-04-01	BT 4	HS 18-1-1-5	SKH 3		T12004
	HS 6-5-2	1.3343	1.3343	S 6-5-2	Z 85 WDCV 06-05-04-02	BM 2	HS 6-5-2	SKH 9, SKH 51	2722	T11302
	HS 2-9-2	1.3348	1.3348	S 2-9-2	Z 100 DCWV 09-04-02-02		HS 2-9-2	SKH 58	2782	T11307
	HS 18-0-1	1.3355	1.3355	S 18-0-1	Z 80 WCV 18-04-01	BT 1	HS 18-0-1	SKH 2		T12001
P11	X 6 Cr 13	1.4000	1.4000	X 6 Cr 13	Z 6 C 12	403 S 17	X 6 Cr 13	SUS 403	2301	S41008
	X 12 Cr 13	1.4006	1.4006	X 10 Cr 13	Z 10 C 13	410 S 21	X 12 Cr 13	SUS 410	2302	S41000
	X 6 Cr 17	1.4016	1.4016	X 6 Cr 17	Z 8 C 17	430 S 15	X 8 Cr 17	SUS 430	2320	S43000
	X 20 Cr 13	1.4021	1.4021	X 20 Cr 13	Z 20 C 13	420 S 37	X 20 Cr 13	SUS 420 J 1	2303	S42000
	X 39 Cr 13	1.4031	1.4031	X 40 Cr 13	Z 40 C 14	420 S 45	X 40 Cr 14	SUS 420	2304	S40280
	X 70 CrMo 15	1.4109	1.4109	X 65 CrMo 14	Z 70 D 14			SUS 440 A		S44002
	X 90 CrMoV 18	1.4112	1.4112	X 90 CrMoV 18	Z 2 CND 18 05	409 S 19	X CrTi 12	SUS 440 B	2327	S44003
	X 105 CrMo 17	1.4125	1.4125	X 105 CrMo 17	Z 100 CD 17		X 105 CrMo 17	SUS 440 C		S44004
	X 3 CrNIMo 13 3	1.4313	1.4313	X 5 CrNi 13 4	Z 5 CN 13.4	425 C 11	X 6 CrNi 13 04	SCS 5	2385	J91540
	X 18 CrN 28	1.4749	1.4749	X 18 CrN 28	Z 18 C 25				2322	S44600
M1	X 10 CrNiS 18 9	1.4305	1.4305	X 10 CrNiS 18 9	Z 10 CNF 18.09	303 S 31	X 10 CrNi 18 09	SUS 303	2346	S30300
M2	X 12 CrNi 18 8	1.4300	1.4300	X 12 CrNi 18 8	Z 12 CN 18	302 S 25		SUS 302	2331	S30200
	X 5 CrNi 18 9	1.4301	1.4301	X 6 CrNi 18 10	Z 6 CN 18.09	304 S 31	X 5 CrNi 18 11	SUS 304	2333	S30400
	X 2 CrNi 19 11	1.4306	1.4306	X 2 CrNi 19 11	Z 2 CN 18.10	304 S 12	X 3 Cr Ni 18 11	SUS 304 L	2352	S30403
	X 9 CrNi 18 8	1.4310	1.4310	X 12 CrNi 17 7	Z 12 CN 17.07	301 S 21	X 12 CrNi 17 07	SUS 301	(2331)	S30100
	X 5 CrNiMo 17 12 2	1.4401	1.4401	X 5 CrNiMo 17 12 2	Z 3 CND 17.11.1	316 S 31	X 5 CrNiMo 17 12	SUS 316	2347	S31600
	X 6 CrNiNb 18 10	1.4550	1.4550	X 6 CrNiNb 18 10	Z 6 CNNb 18.10	347 S 31	X 6 CrNiNb 18 11	SUS 347	2338	S34700
M3	X 2 CrNiN 18 10	1.4311	1.4311	X 2 CrNiN 19 11	Z 2 CN 18 .10 Az	304 S 62	X 2 CrNiN 18 11	SUS 304 LN	2371	S30453
	X 12 CrNi 25 21	1.4335	1.4335	X 12 CrNi 25 21	Z 12 CN 25.20	310 S 24	X 6 CrNi 26 20	SUH 310, SUS 310 S	2361	S31008
	X 2 CrNiMoN 17 13 3	1.4429	1.4429	X 2 CrNiMoN 17 13 3	Z 2 CND 17.13 Az	316 S 62	X 2 CrNiMoN 17 13 3	SUS 316 LN	2375	S31653
	X 2 CrNiMo 18 14 3	1.4435	1.4435	X 2 CrNiMo 18 14 3	Z 2 CND 17.13	316 S 12	X 2 CrNiMo 17 13 2	SCS 16, SUS 316 L	2353	S31603
	X 3 CrNiMo 18 12 3	1.4466	1.4466	X 5 CrNi 18 15		317 S 16	X 5 CrNi 18 15	SUS 317	2366	S31700
	X 9 CrNiSiNCe 21 11 2	1.4835	1.4893	X 9 CrNiSiNCe 21 11 2		310 S 31			2368	S30815
M4	X 2 CrNiMoSi 19 5	1.4424	1.4417	X 2 CrNiMoSi 19 5	Z 2 CND 18.05.03				2376	S31500
	X 3 CrNiMo 27 5 2	1.4460	1.4460	X 4 CrNiMo 27 5 2	Z 3 CND 25.7 Az		X 3 CrNiMo 27 5 2	SUS 329 J 1	2324	S32900
	X 2 CrNiMoN 22 5 3	1.4462	1.4462	X 2 CrNiMoN 22 5	Z 2 CND 22.05 Az	332 S 15	X 2 CrNiMoN 22 5		2377	S31803
	X 2 NiCrMoCu 25 20 5	1.4539	1.4539	X 2 NiCrMoCu 25 20 5	Z 2 NCDU 25 20	904 S 13			2562	N08904
M5	X 2 CrNiMoN 25 7 4	1.4410	1.4410	X 2 CrNiMoN 25 7 4	Z 3 CND 25.07 Az		X 2 CrNiMoN 25 7 4		2328	S32750
	X 1 CrNiMoN 20 18 7	1.4547	1.4529	X 1 CrNiMoN 20 18 7	Z 1 CNDU 20.18.05 Az		X 1 CrNiMoN 20 18 7		2778	S31254
	X 6 NiCrTiMoV 25 15	1.4534	1.4534	X 3 CrNiMoAl 13 8 2						S13800
		1.4540	1.4540	X 4 CrNiCuNb 16 4	Z 4 CNUNb 16.4 M					S15500
	X 3 CrNiMoAl 13 8 2	1.4568	1.4568	X 7 CrNiAl 17 7	Z 9 CAN 17.7	301 S 81	X 7 CrNiAl 17 7	SUS 631	2388	S17700
	X 1 CrNiMoN 25 22 8	1.4652	1.4652	X 2 CrNiMoN 25 22 7						S32654
	X 10 NiCrAlTi 32 20	1.4876	1.4876	X 10 NiCrAlTi 32 20	Z 10 NC 32.21			NCF 800		N08800
	X 5 CrNiCuNb 16 4	1.4980	1.4943	X 4 NiCrTi 25 15	Z 6 NCTDV 25.15	HR 51		SUH 660	2570	S66286

SMG

U.N.E./ I.H.A.	AISI / ASTM	GOST	Misc. Brands	Condition	Structure
F.520L	L2	11KHF		Annealed	
F.5220	O1	9KHVG		Annealed	
	O2	9G2F		Annealed	
F.5230	52100	SHKH15		Annealed	
F.5212	D3	KH12		Annealed	
	H11	4KH5MFS		Annealed	
F.5318	H13	4KH5MF1S		Annealed	
F.5227	A2	9KH5VF		Annealed	
	H10	3KH3M3F		Annealed	
F.5213		KH12		Annealed	
		KH12MF		Annealed	
F.520.S	L6	5KHNM		Annealed	
F.5613	M35	R6M5K5		Annealed	
	M42	R2AM9K5		Annealed	
	T4	R18K5F2		Annealed	
F.5603	M2	R6M5		Annealed	
	M7			Annealed	
	T1	R18		Annealed	
	403	08KH13		Annealed	Ferrite
F.3401	410, CA-15	12KH13, 08KH13		Annealed	Martensite
F.3113	430	12KH17		Annealed	Ferrite
F.5261	420	20KH13		Annealed	Martensite
F.3404	420	40KH13		Annealed	Martensite
	440 A			Annealed	Martensite
	440 B	95KH18		Annealed	Martensite
	440 C	95KH18		Annealed	Martensite
			F6NM	Annealed	Martensite
	446	15KH28		Annealed	Ferrite
F.3508	303	12KH19N9		Annealed	Austenite
	302	12KH18N9		Annealed	Austenite
F.3504	304, 304 H	08KH18N10		Annealed	Austenite
F.3504	304 L	03KH18N11		Annealed	Austenite
F.3517	301	07KH16N6		Annealed	Austenite
F.3534	316	08KH17H13M2T		Annealed	Austenite
F.3524	347	08KH18N12B		Annealed	Austenite
F.3541	304 LN	03KH18N11		Annealed	Austenite
	310 S	12KH25N20		Annealed	Austenite
	316 LN	03KH16N15M3		Annealed	Austenite
F.3533	316 L	03KH17N14M3		Annealed	Austenite
	317	08KH17H15M3T		Annealed	Austenite
			253 MA	Annealed	Austenite
			3RE60	Annealed	Duplex
	329			Annealed	Duplex
	329 LN		SAF 2205	Annealed	Duplex
	904L			Annealed	Super austenite
	F 53		SAF 2507	Annealed	Super duplex
			254 SMO	Annealed	Super austenite
	XM-13		PH13-8Mo	Solution treated	Austenite
	XM-12		15-5-PH	Solution treated	Martensite
	AMS 5528	09KH17N7YU1	17-7-PH	Solution treated	Austenite/ferrite
			654 SMO	Annealed	Super austenite
			Alloy 800	Annealed	Austenite
	660		A286	Solution treated	Austenite

SMG

SMG	EN	EN-Nr	W.-Nr	DIN	AFNOR	BS	UNI	JIS	SS	UNS
K1	EN-GJL-150	0.6150	0.6150	GG-15	Ft 15 D	Grade 150	G15	FC 150	01 15-00	F11601
	EN-GJL-200	0.6200	0.6200	GG-20	Ft 20 D	Grade 220	G20	FC 200	01 20-00	F12101
	EN-GJL-215			GG-220 HB					02 19	
	EN-GJL-250	0.6250	0.6250	GG-25	Ft 25 D	Grade 260	G25	FC 250	01 25-00	F12401
	EN-GJL-300	0.6300	0.6300	GG-30	Ft 30 D	Grade 300	G30	FC 300	01 30-00	F13101
	EN-GJL-350	0.6350	0.6350	GG-35	Ft 35 D	Grade 350	G35	FC 350	01 35-00	F13502
K2	EN-GJV-300			GJV-300						
	EN-GJV-350			GJV-350						
	EN-GJV-400			GJV-400						
	EN-GJV-450			GJV-450						
	EN-GJV-500			GJV-500						
K3	EN-GJMB-550-4	0.8155		GTS-55-04	P 540/5	P 540/5	P 55-04	PCMP55-04	08 54-00	F24130
K4	EN-GJS-350-22	0.7033	0.7033	GGG-35.3	FGS 370-17	Grade 350/22		FCD 350-22L	07 17-15	
	EN-GJS-400-15	0.7040	0.7040	GGG-40	FGS 400-12	Grade 420/12	GS 400-12	FCD 400-18L	07 17-02	F32800
	EN-GJS-400-18	0.7043	0.7043	GGG-40.3	FGS-370-17	Grade 370/17	GSO 42/17		07 17-12	F32800
	EN-GJS-500-7	0.7050	0.7050	GGG-50	FGS 500-7	Grade 500/7	GS 500-7	FCD 500-7	07 27-02	F33800
	EN-GJS-600-3	0.7060	0.7060	GGG-60	FGS 600-3	Grade 600/3	GS 600-3	FCD 600-3	07 32-03	F34100
	EN-GJS-700-2	0.7070	0.7070	GGG-70	FGS 700-2	Grade 700/2	GS 700-2	FCD 700-2	07 37-01	F34800
K5	-									ADI grade 5
	EN-GJS-1000-5			GJS-1000-5						ADI grade 2
	EN-GJS-1200-2			GJS-1200-2						ADI grade 3
	EN-GJS-1400-1			GJS-1400-1						ADI grade 4
	EN-GJS-800-8			GJS-800-8						ADI grade 1
K6	EN-GJLA-XNiCr 20-2	0.6660	0.6660	GGL-NiCr 20 2	FGL Ni20 Cr2	Grade F2			05 23-00	F41002
	EN-GJLA-XNiCr 30-3	0.6676	0.6676	GGL-NiCr 30 3	FGL Ni30 Cr3	Grade F3				F41004
	EN-GJLA-XNiCuCr15-6-2	0.6655	0.6655	GGL-NiCuCr 15 6 2	FGL Ni15 Cu6 Cr2	Grade F1				F41000
K7	EN-GJSA-XNi35	0.7683	0.7683	GGG-Ni 35	FGS Ni35					F43006
	EN-GJSA-XNiCr20-2	0.7660	0.7660	GGG-NiCr 20 2	FGS Ni20 Cr2	Grade S2				F43000
	EN-GJSA-XNiCr30-3	0.7676	0.7676	GGG-NiCr 30 3	FGS Ni30 Cr3	Grade S3				F43003
	EN-GJSA-XNiMn13-7	0.7652	0.7652	GGG-NiMn 13 7	FGS Ni13 Mn7	Grade S6			07 72-00	-
	EN-GJSA-XNiMn23-4	0.7673	0.7673	GGG-NiMn 23 4	FGS Ni23 Mn4	Grade S2M				F43010
N1	AW-1050A	Al99.5	3.0255	Al99.5	A-5/1050A	1B		(A1050)	4007	AA1050A
	AW-3103	AlMn1	3.0515	AlMn1		N3			4054	AA3103
	AW-3003	AlMn1Cu	3.0517	AlMn1Cu	A-M1/3003			A3003		AA3003
	AW-2014	AlCuSiMn	3.1255	AlCuSiMn	A-U4SG/2014	H15			4338	AA2014
	AW-2011	AlCuBiPb	3.1655	AlCuBiPb	A-U5PbBi/2011	FC1		A2011	4355	AA2011
	AC-46200	AlSi8Cu3(Si)	3.2161	G-AlSi8Cu3					4251	A13800
	AC-42000		3.2341	G-AlSi5Mg	A-S7G	LM25	3599	AC 4C	4244	
	AW-6060	AlMgSi0.5	3.3206	AlMgSi0.5	A-GS/6060	(H9)			4103	AA6060
	AW-6063	AlMgSi0.7	3.3210	AlMgSi0.7	A-GSUC/6061	(H10)		(A6063)	4104,4107	AA6005
	AW-5005	AlMg1	3.3315	AlMg1	A-G0.6	N41			4106	AA5005
	AW-7020	AlZn4.5Mg1	3.4335	AlZn4.5Mg1	A-Z5G/7020	H17			4425	AA7020
	AW-7075		3.4365	AlZnMgCu1.5	A-Z5GU/7075	2L95/2L96		A7075		AA7075
	MN65120	MgSe3Zn2Zr1	3.5103	G-MgSe3Zn2Zr1	ZRE1	MAG6-TE				M12330
	MG-P-63	MgAl6Zn	3.5612	G-MgAl6Zn	G-A6-Z1	MAG-E-121				M11600
	MG-P-61	MgAl8Zn	3.5812	G-MgAl8Zn	(G-A7-Z1)					
N2	AW-6082	AlMgSi1	3.2315	AlMgSi1	A-SGM0.7/6082	H30			4212	AA6082
	AC-43400	AlSi10Mg(Fe)	3.2381	G-AlSi10Mg	A-S10G	LM9			4253	A13600
	AC-44200	AlSi12	3.2382	GD-AlSi12						
N3		AlSi17Cu5						ADC14		
N11	CC331G		2.0940.01	CuAl10Fe	CuAl10Fe	AB1			5710	C95200
	CC333G		2.0975.01	CuAl10Ni	CuAl10Ni5Fe5	AB2			5716	C95500
		CuNi10Fe1Mn	2.0872	CuNi10Fe1Mn	CuNi10Fe1Mn	CN102			5667	C70600
				CuNi10Zn45						
		CW408J	2.0790	CuNi18Zn19Pb	CuNi18Zn19Pb1					C76300
	CW352H		2.1176	CuPb10Sn	CuSn10Pb10	LB2			5640	C93700
	CC480K		2.1050.01	CuSn10	CuSn10	CT1			5443	C90700
			2.1087	CuSn10Zn					5458	C90500
	CW452K	CuSn6	2.1020	CuSn6	CuSn6	PB103		C5191	5428	C51900
	CW502L	CuZn15	2.0240	CuZn15	CuZn15	CZ102		C2300	5112	C23000
	CW706R	CuZn28Sn1	2.0470	CuZn28Sn1	CuZn29Sn1				5220	C44300
	CW508L	CuZn37	2.0321	CuZn37	CuZn37	CZ108			5150	C27200
	CW717R	CuZn38Sn1	2.0530	CuZn38Sn1						C46400
	CW614N	CuZn39Pb3	2.0401	CuZn39Pb3	CuZn39Pb3	CZ121			5170	C38500
	CW612N	CuZn40Pb2	2.0402	CuZn40Pb2	CuZn39Pb2	CZ120			5168	C37800
	CW622N	CuZn44Pb2	2.0410	CuZn44Pb2		CZ104			5272	C68700

SMG

U.N.E./ I.H.A.	AISI / ASTM	GOST	Misc. Brands	Condition	Structure
	A48 25 B	Sc 15			Grey cast iron (GCI)
	A48 30 B	Sc 20			Grey cast iron (GCI)
	G 3500				Grey cast iron (GCI)
	A48 35 B	Sc 25			Grey cast iron (GCI)
	A48 45 B	Sc 30			Grey cast iron (GCI)
	A48 50 B	Sc 35			Grey cast iron (GCI)
	Grade 350				Compacted graphite irons (CGI)
	Grade 400				Compacted graphite irons (CGI)
	Grade 400-15				Compacted graphite irons (CGI)
	Grade 450				Compacted graphite irons (CGI)
	Grade 500				Compacted graphite irons (CGI)
	A220 60004			Tempered	Malleable cast irons (MCI)
					Nodular cast irons (SGI)
FGE 38-17	60-40-18	Vc 42-12			Nodular cast irons (SGI)
	60-40-18	Vc 42-12			Nodular cast irons (SGI)
FGE 50-7	A536 80-55-6	Vc 50-2			Nodular cast irons (SGI)
FGE 60-2	A476 80-60-03	Vc 60-2			Nodular cast irons (SGI)
FGE 70-2	A536 100-70-03	Vc 70-2			Nodular cast irons (SGI)
	1600/1300/-				Austempered cast irons (ADI)
	1050/700/7				Austempered cast irons (ADI)
	1200/850/4				Austempered cast irons (ADI)
	1400/1100/1				Austempered cast irons (ADI)
	850/550/10				Austempered cast irons (ADI)
	A436 Type 2		Ni-Resist 2		Austenitic lamellar cast irons
	A436 Type 3		Ni-Resist 3		Austenitic lamellar cast irons
	A436 Type 1		Ni-Resist 1		Austenitic lamellar cast irons
	A439 Type D-5		Ni-Resist D-5		Austenitic nodular cast irons
	A436 Type D-2		Ni-Resist D-2		Austenitic nodular cast irons
	A436 Type D-3		Ni-Resist D-3		Austenitic nodular cast irons
	-		Nodumag		Austenitic nodular cast irons
	A439 Type D-2M		Ni-Resist D-2M		Austenitic nodular cast irons
	A380				
	B26				
	AMS 4442				
	AZ61A				
	AZ80A				
	B85				
	A413.2				
	B390.0				
	CA952	BrA9ZH3L			
	CA955	BrA10ZH4N4L			
	CA937				
		BrOF6.5-0.15			
		L90			
		LOMsh70-1-0.05			
		LO60-1			
		LAMsh77-2-0.05			

SMG

SMG	EN	EN-Nr	W.-Nr	DIN	AFNOR	BS	UNI	JIS	SS	UNS
S1										
S2										
S3	NiMo30		2.4810							N10002
	NiMo16Cr15W		2.4819							N10276
	NiCr19Fe19Nb5Mo3		2.4668							N07718
			2.4669							N07750
	NiCr20TiAl		2.4631							N07080
	NiCr19Co18Mo4Ti3Al3									N07500
	NiCr20Co13Mo4Ti3Al		2.4654							N07001
S11			3.7024							
										R54620
S12										R56320
	TiAl6V4		3.7164							R56400
S13				TiV10Fe2Al3						
H3	16 MnCr 5	1.7131	1.7131	16 MnCr 5	16 MC 5	527 M 17	16 MnCr 5	SCR 415	2511	G51170
H5	42 CrMo 4	1.7225	1.1201	42 CrMo 4	42 CD 4	708 M40	42 CrMo 4	SCM 440 (H)	2244	G41400
	C 67S	1.1231	1.1231	Ck 67	XC 68	060 A 67	C 70		1770	G10700
	C 75S	1.1248	1.1248	Ck 75	XC 75	060 A 78	C 75		1774, 1778	G10780
	C 100S	1.1274	1.1274	Ck 101		060 A 96		SUP 4	1870	G10950
	C 105U	1.1545	1.1545	C 105 W1	Y1 105		C 100 KU		1880	
			1.2550	60 WCrV 7	55 WC 20		55 WCrV 8 KU			
	55 Cr 3	1.7176	1.7176	55 Cr 3	55 C 3	527 A 60	55 Cr 3	SUP 9 (A)	2253	G51550
H7	107 CrV 3	1.2210	1.2210	115 CrV 3	100 C 3		107 CrV 3 KU			T61202
			1.2510	100 MnCrW 4	90 MWCV 5	BO 1	95 MnWCr 5 KU	SKS 3	2140	T31501
	90 MnCrV 8	1.2842	1.2842	90 MnCrV 8	90 MV 8	BO 2	90 MnVCr 8 KU			T31502
	100 Cr 6	1.3505	1.3505	100 Cr 6	100 C 6	534 A 99	100 Cr 6	SUJ 2	2258	G51986
H8	X 40 CrMoV 5 1	1.2344	1.2344	X 40 CrMoV 5 1	Z 40 CDV 5	BH 13	X 40 CrMo 5 1 1 KU	SKD 61	2242	T20813
	X 100 CrMoV 5	1.2363	1.2363	X 100 CrMoV 5 1	Z 100 CDV 5	BA 2	X 100 CrMoV 5 1 KU	SKD 12	2260	T30102
	X 155 CrVMo 12 1		1.2379	X 155 CrVMo 12 1	Z 160 CDV 12	BD 2	X 155 CrVMo 12 1 KU	SKD 11		T30402
			1.2436	X 210 CrW 12			X 215 CrW 12 1 KU	SKD 2	2312	
			1.2601	X 165 CrMoV 12			X 165 CrMoW 12 KU		2310	
			1.2713	55 NiCrMoV 6	55 NCDV 7			SKT 4		T61206
	HS 6-5-2-5	1.3243	1.3243	S 6-5-2-5	Z 85 WDKCV 06-05-05-04-02		HS 6-5-2-5	SKH 55	2723	
	HS 2-10-1-8	1.3247	1.3247	S 2-10-1-8	Z 110 DKCWV 09-08-04	BM 42	HS 2-9-1-8	SKH 51		T11342
	HS 6-5-2	1.3343	1.3343	S 6-5-2	Z 85 WDCV 06-05-04-0	BM 2	HS 6-5-2	SKH 9, SKH 51	2722	T11302
	HS 18-0-1	1.3355	1.3355	S 18-0-1	Z 80 WCV 18-04-01	BT 1	HS 18-0-1	SKH 2		T12001
H11	X 20 Cr 13	1.4021	1.4021	X 20 Cr 13	Z 20 C 13	420 S 37	X 20 Cr 13	SUS 420 J 1	2303	S42000
	X 70 CrMo 15	1.4109	1.4109	X 65 CrMo 14	Z 70 D 14			SUS 440 A		S44002
	X 90 CrMoV 18	1.4112	1.4112	X 90 CrMoV 18	Z 2 CND 18 05	409 S 19	X CrTi 12	SUS 440 B	2327	S44003
	X 105 CrMo 17	1.4125	1.4125	X 105 CrMo 17	Z 100 CD 17		X 105 CrMo 17	SUS 440 C		S44004
H12	X 3 CrNiMoAl 13 8 2	1.4534	1.4534	X 3 CrNiMoAl 13 8 2						S13800
	X 5 CrNiCuNb 16 4	1.4548	1.4542	X 5 CrNiCuNb 17 4	Z 6 CNU 17.4			SCS 24, SUS 630		S17400
	X 7 CrNiAl 17 7	1.4568	1.4568	X 7 CrNiAl 17 7	Z 9 CAN 17.7	301 S 81	X 7 CrNiAl 17 7	SUS 631	2388	S17700
	X 6 NiCrTiMoV 25 15	1.4980	1.4943	X 4 NiCrTi 25 15	Z 6 NCTDV 25.15	HR 51		SUH 660	2570	S66286
H21	X 120 Mn 12	1.3401	1.3401	X 120 Mn 12	Z 120 M 12	BW 10		SC MnH 1	2183	
H31	EN-GJN-HV520	0.9620	G-X330 NiCr 4 2	FB Ni4 Cr2 BC	Grade 2 A	Grade 2 A			05 12-00	F45001
	EN-GJN-HV550	0.9625	G-X260 NiCr 4 2	FB Ni4 Cr2 HC	Grade 2 B	Grade 2 B			05 13-00	F45000
	EN-GJN-HV600(XCr11)	0.9630	G-X300 CrNiSi 9 5 2	FB Cr9 Ni5	Grade 2 C, D, E	Grade 2 C, D, E			04 57-00	F45003

SMG

U.N.E./ I.H.A.	AISI / ASTM	GOST	Misc. Brands	Condition	Structure
			Discalloy	Precipitation hardened	
			Haynes 25		
			Stellite 21		
			Stellite 31		
			Hastelloy C		
		KHN65MV	Hastelloy C-276		
			IN 100		
			Inconel 718		
			Inconel X-750	Solution treated	
			Nimonic 80A		
			René 41		
			Udimet 500		
			Waspalloy		
			Ti	Commercially pure	Ti (α)
	AMS 4919		Ti 6-2-4-2	Annealed	Ti (α)
	AMS 4943		Ti 3Al-2.5V (grd 9)	Annealed	Ti (α+β)
	AMS 4920, Grd 5	VT6	Ti 6Al-4V	Annealed	Ti (α+β)
	AMS 4986		Ti 10V-2Fe-3Al	Annealed	Ti (β)
F.1516	5115	12KHN2		Case hardened	
F.1252	4142, 4140	38HM		Quenched & Tempered	
F.5103	1070	70		Quenched & Tempered	
F.5107	1078, 1080	75		Quenched & Tempered	
F.5117	1095			Quenched & Tempered	
F.5118	W 1	U10A		Quenched & Tempered	
	S1	5KHV2SF		Quenched & Tempered	
	5155			Quenched & Tempered	
F.520L	L2	11KHF		Quenched & Tempered	
F.5220	O1	9KHVG		Quenched & Tempered	
	O2	9G2F		Quenched & Tempered	
F.5230	52100	SHKH15		Quenched & Tempered	
F.5318	H13	4KH5MF1S		Quenched & Tempered	
F.5227	A2	9KH5VF		Quenched & Tempered	
F.5211	D2	KH12MF		Quenched & Tempered	
F.5213		KH12		Quenched & Tempered	
		KH12MF		Quenched & Tempered	
F.520.S	L6	5KHNM		Quenched & Tempered	
F.5613	M35	R6M5K5		Quenched & Tempered	
	M42	R2AM9K5		Quenched & Tempered	
F.5603	M2	R6M5		Quenched & Tempered	
	T1	R18		Quenched & Tempered	
F.5261	420	20KH13		Quenched & Tempered	Martensite
	440 A			Quenched & Tempered	Martensite
	440 B	95KH18		Quenched & Tempered	Martensite
	440 C	95KH18		Quenched & Tempered	Martensite
	XM-13		PH13-8Mo	Precipitation hardened	Martensite
	630		17-4-PH	Precipitation hardened	Martensite
	AMS 5528	09KH17N7YU1	17-7-PH	Precipitation hardened	Austenite/ferrite
	660		A286	Precipitation hardened	Austenite
	A128 Grade A				
	A532 IB (NiCr-LC		Ni-Hard 2		White cast iron
	A532 IA (NiCr-HC)		Ni-Hard 1		White cast iron
	A532 ID (Ni-HiCr)		Ni-Hard 4		White cast iron

Declaration of conformity

Cemented carbide inserts and insert carriers

Cemented carbide inserts and cemented carbide insert carriers from Seco Tools are not included in the product range intended for the following requirements. Nevertheless Seco Tools can make the following declaration.
These products meet all requirements in RoHS (Restriction of the use of certain Hazardous Substances in electrical and electronic equipment), WEEE (Waste Electrical & Electronic Equipment) and ELV (End of Life Vehicles) requirements.
Products do not contain mercury, lead, hexavalent chromium, cadmium, CFC, HCFC, flame retardants or solvents in concentrations that exceed specifications in the regulations.

Regrinding:
Wet or dry grinding can produce potentially hazardous dusts or mists that can irritate skin, eyes, nose, throat and result in lung damage or disease. To avoid injury use proper safety precautions and protective equipment.

Disposal:
Seco Tools will buy back used inserts and solid carbide tools for recycling. Inserts and solid carbide tools should be separated from other metal waste (steel, aluminium, copper etc).
All packing material is fully recyclable.

CBN and PCD inserts

Inserts from Seco Tools are not included in the product range intended for the following requirements. Nevertheless Seco Tools can make the following declaration.
This product meets all requirements in RoHS (Restriction of the use of certain Hazardous Substances in electrical and electronic equipment), WEEE (Waste Electrical & Electronic Equipment) and ELV (End of Life Vehicles) requirements.
Products do not contain mercury, lead, hexavalent chromium, cadmium, CFC, HCFC, flame retardants or solvents in concentrations that exceed specifications in the regulations.

Regrinding:
Wet or dry grinding can produce potentially hazardous dusts or mists that can irritate skin, eyes, nose, throat and result in lung damage or disease. To avoid injury use proper safety precautions and protective equipment.

Disposal:
Seco Tools will buy back used CBN- or PCD-tipped inserts for recycling. Inserts should be separated from other metal waste (steel, aluminium, copper etc). Solid CBN-inserts may be discarded as landfill waste.
All packing material is fully recyclable.

Black oxide insert carriers

Insert carriers from Seco Tools are not included in the product range intended for the following requirements. Nevertheless Seco Tools can make the following declaration.
This product meets all requirements in RoHS (Restriction of the use of certain Hazardous Substances in electrical and electronic equipment), WEEE (Waste Electrical & Electronic Equipment) and ELV (End of Life Vehicles) requirements.
Products do not contain mercury, lead, hexavalent chromium, cadmium, CFC, HCFC, flame retardants or solvents in concentrations that exceed specifications in the regulations.

Disposal:
Used insert carriers may be sent for recycling together with ordinary steel waste (swarf and discarded steel scrap) for recycling.
All packing material is fully recyclable.

Declaration of conformity

Cermet inserts

Inserts from Seco Tools are not included in the product range intended for the following requirements. Nevertheless Seco Tools can make the following declaration.
This product meets all requirements in RoHS (Restriction of the use of certain Hazardous Substances in electrical and electronic equipment), WEEE (Waste Electrical & Electronic Equipment) and ELV (End of Life Vehicles) requirements.
Cermet grade C15M inserts do contain nickel and will leach nickel when in contact with the skin. Amount of leaching is higher than specified in norm SS-EN 1811 Reference test method for release of nickel from products intended to come into direct and prolonged contact with the skin.
These norms are intended for products that are in direct and prolonged contact with the skin and are therefore not directly applicable for cermet inserts. Persons with known allergic reactions to nickel are advised to wear protective gloves when handling cermet inserts.

Regrinding:
Wet or dry grinding can produce potentially hazardous dusts or mists that can irritate skin, eyes, nose, throat and result in lung damage or disease. To avoid injury use proper safety precautions and protective equipment.

Disposal:
Used inserts may be recycled. Inserts should be separated from other metal waste (steel, aluminium, copper, etc) including cemented carbide inserts.
All packing material is fully recyclable.

Nickel coated insert carriers

Insert carriers from Seco Tools are not included in the product range intended for the following requirements. Nevertheless Seco Tools can make the following declaration.
This product meets all requirements in RoHS (Restriction of the use of certain Hazardous Substances in electrical and electronic equipment), WEEE (Waste Electrical & Electronic Equipment) and ELV (End of Life Vehicles) requirements.
Products do not contain mercury, lead, hexavalent chromium, cadmium, CFC, HCFC, flame retardants or solvents in concentrations that exceed specifications in the regulations.
Insert carriers do contain nickel and will leach nickel when in contact with the skin. Amount of leaching is not higher then norm SS-EN 1811 Reference test method for release of nickel from products intended to come into direct and prolonged contact with the skin.
These norms are intended for products that are in direct and prolonged contact with the skin and are therefore not directly applicable for insert carriers. Persons with known allergic reactions to nickel are advised to wear protective gloves when handling nickel coated insert carriers.

Disposal:
Used tools maybe sent for recycling together with ordinary steel waste (swarf and discarded steel scrap) for recycling.
All packing material is fully recyclable.

Intentionally added alloying elements

Grade	Cemented carbide										Coating						
	W	Ti	Ta	Nb	Co	Cr	Ni	Mo	C	N	Ti	Al	C	N	O	Si	Nb
CP20	■				■				■		■			■			
CP30																	
CP200	■				■	■			■		■	■		■			
CP300	■	■	■	■	■				■		■	■		■			
CP500	■				■	■			■		■	■		■			
CP600	■				■	■			■		■	■		■			
C15M	■	■	■	■	■		■	■	■	■							
CF	■		■		■		■	■	■								
CM	■		■		■		■	■	■								
DP2000	■		■	■	■				■		■	■	■	■	■		
DP3000	■	■	■	■	■				■	■	■	■	■	■	■		
F15M	■				■	■			■		■	■		■			
F25M	■	■	■	■	■				■		■	■		■			
F30M	■				■	■			■		■	■		■			
F40M	■				■	■			■		■	■		■			
HX	■		■		■				■								
H02	■		■		■	■			■								
H15	■				■	■			■								
H25	■				■	■			■								
KX	■				■	■			■								
MH1000	■				■	■			■		■	■		■			
MK1500	■		■		■				■		■	■	■	■	■		
MK2050	■		■		■	■			■		■	■		■		■	
MM4500	■				■	■			■		■	■	■	■	■		
MP1020	■	■	■	■	■				■								
MP1500	■		■	■	■				■		■	■	■	■	■		
MP2500	■		■	■	■				■		■	■	■	■	■		
MP3000	■				■	■			■		■	■		■			
MS2500	■		■	■	■				■		■	■	■	■	■		
MS2050	■				■	■			■		■	■		■			■
RX1500	■		■		■		■	■	■		■	■		■			
RX2000	■		■		■	■			■		■	■		■			
S25M																	
T350M	■		■	■	■				■		■	■	■	■	■		
T25M	■		■	■	■				■		■		■	■			
TGH1050	■				■	■			■		■	■		■		■	
TGK1500	■		■		■				■		■	■	■	■	■		
TGP25	■	■	■	■	■				■		■	■	■	■	■		
TGP35	■		■	■	■				■		■	■	■	■	■		
TGP45	■		■	■	■				■		■	■	■	■	■		
TH1000	■				■	■			■		■	■		■		■	
TH1500	■				■	■			■		■	■	■	■	■		
TK1001	■				■	■			■		■	■	■	■	■		
TK2001	■		■		■	■			■		■	■	■	■	■		
TM2000	■	■	■	■	■				■	■	■	■	■	■	■		
TM4000	■	■	■	■	■				■	■	■	■	■	■	■		
TP0501	■	■	■	■	■	■			■		■	■	■	■	■		
TP1020	■	■	■	■	■				■	■							
TP1030	■	■	■	■	■				■	■	■	■		■		■	
TP1500	■	■	■	■	■				■	■	■	■	■	■	■		
TP1501	■	■	■	■	■				■	■	■	■	■	■	■		
TP200	■	■	■	■	■				■	■	■	■	■	■	■		
TP2500	■	■	■	■	■				■	■	■	■	■	■	■		
TP3500	■	■	■	■	■				■	■	■	■	■	■	■		
TP2501	■	■	■	■	■	■			■	■	■	■	■	■	■		
TP40	■		■	■	■				■		■		■	■			
TS2000	■				■	■			■		■	■		■			
TS2050	■				■	■			■		■	■		■		■	
TS2500	■		■		■				■		■	■		■			
T250D	■				■	■			■		■	■		■			
T400D	■				■	■			■		■	■		■			
T100R	■		■		■	■			■		■	■		■			
T60M	■	■	■	■	■				■		■	■		■			
883	■		■		■				■								